CAP FIXED SPHERICAL EYE

Peninsular Mounting Style: **MH 22**

Heavy Duty Steel Air Cylinder

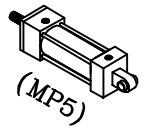

Peninsular Cylinder Co.

NFPA
NAAMS
ISO: DIN-VDMA

ISO 9001:2000 Registered

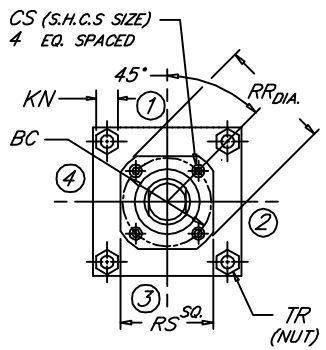

KM (SHORT MALE)
KF (SHORT FEMALE)
KD (FULL MALE)
KI (INTERMEDIATE MALE)
KA (LONG MALE)

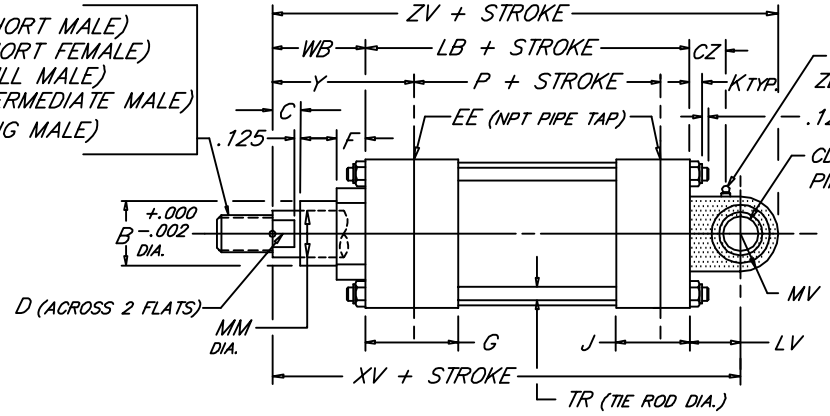

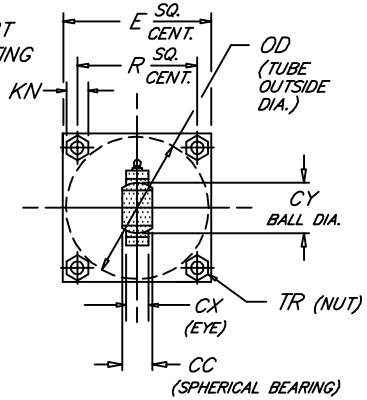

BORE	ROD MM	ROD THREAD X LENGTH KM & KF	KD	KI	KA	B	BC	C	CC	CD	CS	CX	CY	CZ	D	E	NPT EE	F	G	J	K	KN	LV	LB	MV	OD	P	R	RR	RS	TR	WB	XV	Y	ZV
8.000	1.375	1"-14 x 1.625	1 3/8"-12 x 1.625	1 1/4"-12 x 1.625	1 1/4"-12 x 2.500	1.999	3.267	.625			.312				1.125														3.734	3.000		1.625	8.312	2.750	9.812
	1.750	1 1/4"-12 x 2.000	1 3/4"-12 x 2.000	1 1/2"-12 x 2.000	1 1/2"-12 x 3.000	2.374	3.267	.750			.312				1.500														3.734	3.000		1.875	8.562	3.000	10.062
	2.000	1 1/2"-12 x 2.250	2"-12 x 2.250	1 3/4"-12 x 2.250	1 3/4"-12 x 3.500	2.624	3.812	.875			.312				1.688														4.312	3.750		2.000	8.687	3.125	10.187
	2.500	1 7/8"-12 x 3.000	2 1/2"-12 x 3.000	2 1/4"-12 x 3.000	2 1/4"-12 x 4.500	3.124	3.812	1.000			.312				2.062														4.312	3.750		2.250	8.937	3.375	10.437
	3.000	2 1/4"-12 x 3.500	3"-12 x 3.500	2 3/4"-12 x 3.500	2 3/4"-12 x 5.500	3.749	4.700	1.000			.375				2.625														5.562	4.500		2.250	8.937	3.375	10.437
	3.500	2 1/2"-12 x 3.500	3 1/2"-12 x 3.500	3 1/4"-12 x 3.500	3 1/4"-12 x 6.500	4.249	5.200	1.000	.875	1.000	.375	.750	1.436	.812	3.000	8.500	3/4	.625	2.000	1.500	.750	.938	1.562	5.125	1.500	8.450	3.375	6.435	6.062	5.000	.625	2.250	8.937	3.375	10.437
	4.000	3"-12 x 4.000	4"-12 x 4.000	3 3/4"-12 x 4.000	3 3/4"-12 x 7.500	4.749	5.700	1.000			.375				3.375														6.562	5.500		2.250	8.937	3.375	10.437
	4.500	3 1/4"-12 x 4.500	4 1/2"-12 x 4.500	4 1/4"-12 x 4.500	4 1/4"-12 x 8.250	5.249	6.200	1.000			.375				3.875														7.062	6.000		2.250	8.937	3.375	10.437
	5.000	3 1/2"-12 x 5.000	5"-12 x 5.000	4 3/4"-12 x 5.000	4 3/4"-12 x 9.000	5.749	6.700	1.000			.375				4.250														7.562	6.500		2.250	8.937	3.375	10.437
	5.500	4"-12 x 5.500	5 1/2"-12 x 5.500	5 1/4"-12 x 5.500	5 1/4"-12 x 10.000	6.249	7.125	1.000			.375				4.625														7.938	7.000		2.250	8.937	3.375	10.437
10.000	1.750	1 1/4"-12 x 2.000	1 3/4"-12 x 2.000	1 1/2"-12 x 2.000	1 1/2"-12 x 3.000	2.374	3.812	.750			.312				1.500														4.312	3.750		1.875	10.187	3.062	11.937
	2.000	1 1/2"-12 x 2.250	2"-12 x 2.250	1 3/4"-12 x 2.250	1 3/4"-12 x 3.500	2.624	3.812	.875			.312				1.688														4.312	3.750		2.000	10.312	3.187	12.062
	2.500	1 7/8"-12 x 3.000	2 1/2"-12 x 3.000	2 1/4"-12 x 3.000	2 1/4"-12 x 4.500	3.124	3.812	1.000			.312				2.062														4.312	3.750		2.250	10.562	3.437	12.312
	3.000	2 1/4"-12 x 3.500	3"-12 x 3.500	2 3/4"-12 x 3.500	2 3/4"-12 x 5.500	3.749	4.700	1.000			.375				2.625														5.562	4.500		2.250	10.562	3.437	12.312
	3.500	2 1/2"-12 x 3.500	3 1/2"-12 x 3.500	3 1/4"-12 x 3.500	3 1/4"-12 x 6.500	4.249	5.200	1.000	1.187	1.375	.375	1.031	1.926	.906	3.000	10.625	1	.625	2.250	2.000	.875	1.062	1.937	6.375	1.750	10.450	4.250	7.920	6.062	5.000	.750	2.250	10.562	3.437	12.312
	4.000	3"-12 x 4.000	4"-12 x 4.000	3 3/4"-12 x 4.000	3 3/4"-12 x 7.500	4.749	5.700	1.000			.375				3.375														6.562	5.500		2.250	10.562	3.437	12.312
	4.500	3 1/4"-12 x 4.500	4 1/2"-12 x 4.500	4 1/4"-12 x 4.500	4 1/4"-12 x 8.250	5.249	6.200	1.000			.375				3.875														7.062	6.000		2.250	10.562	3.437	12.312
	5.000	3 1/2"-12 x 5.000	5"-12 x 5.000	4 3/4"-12 x 5.000	4 3/4"-12 x 9.000	5.749	6.700	1.000			.375				4.250														7.562	6.500		2.250	10.562	3.437	12.312
	5.500	4"-12 x 5.500	5 1/2"-12 x 5.500	5 1/4"-12 x 5.500	5 1/4"-12 x 10.000	6.249	7.125	1.000			.375				4.625														7.938	7.000		2.250	10.562	3.437	12.312
12.000	2.000	1 1/2"-12 x 2.250	2"-12 x 2.250	1 3/4"-12 x 2.250	1 3/4"-12 x 3.500	2.624	3.812	.875			.312				1.688														4.312	3.750		2.000	11.312	3.187	13.562
	2.500	1 7/8"-12 x 3.000	2 1/2"-12 x 3.000	2 1/4"-12 x 3.000	2 1/4"-12 x 4.500	3.124	3.812	1.000			.312				2.062														4.312	3.750		2.250	11.562	3.437	13.812
	3.000	2 1/4"-12 x 3.500	3"-12 x 3.500	2 3/4"-12 x 3.500	2 3/4"-12 x 5.500	3.749	4.700	1.000			.375				2.625														5.562	4.500		2.250	11.562	3.437	13.812
	3.500	2 1/2"-12 x 3.500	3 1/2"-12 x 3.500	3 1/4"-12 x 3.500	3 1/4"-12 x 6.500	4.249	5.200	1.000	1.531	1.750	.375	1.312	2.515	1.094	3.000	12.750	1	.625	2.250	2.000	.875	1.062	2.437	6.875	2.250	12.450	4.750	9.405	6.062	5.000	.750	2.250	11.562	3.437	13.812
	4.000	3"-12 x 4.000	4"-12 x 4.000	3 3/4"-12 x 4.000	3 3/4"-12 x 7.500	4.749	5.700	1.000			.375				3.375														6.562	5.500		2.250	11.562	3.437	13.812
	4.500	3 1/4"-12 x 4.500	4 1/2"-12 x 4.500	4 1/4"-12 x 4.500	4 1/4"-12 x 8.250	5.249	6.200	1.000			.375				3.875														7.062	6.000		2.250	11.562	3.437	13.812
	5.000	3 1/2"-12 x 5.000	5"-12 x 5.000	4 3/4"-12 x 5.000	4 3/4"-12 x 9.000	5.749	6.700	1.000			.375				4.250														7.562	6.500		2.250	11.562	3.437	13.812
	5.500	4"-12 x 5.500	5 1/2"-12 x 5.500	5 1/4"-12 x 5.500	5 1/4"-12 x 10.000	6.249	7.125	1.000			.375				4.625														7.938	7.000		2.250	11.562	3.437	13.812
14.000	2.500	1 7/8"-12 x 3.000	2 1/2"-12 x 3.000	2 1/4"-12 x 3.000	2 1/4"-12 x 4.500	3.124	3.812				.312				2.062														4.312	3.750					
	3.000	2 1/4"-12 x 3.500	3"-12 x 3.500	2 3/4"-12 x 3.500	2 3/4"-12 x 5.500	3.749	4.700				.375				2.625														5.562	4.500					
	3.500	2 1/2"-12 x 3.500	3 1/2"-12 x 3.500	3 1/4"-12 x 3.500	3 1/4"-12 x 6.500	4.249	5.200				.375				3.000														6.062	5.000					
	4.000	3"-12 x 4.000	4"-12 x 4.000	3 3/4"-12 x 4.000	3 3/4"-12 x 7.500	4.749	5.700	1.000	1.750	2.000	.375	1.500	2.872	1.156	3.375	14.750	1 1/4	.625	2.750	2.250	1.000	1.250	2.687	8.125	2.750	14.450	5.625	10.889	6.562	5.500	.875	2.250	13.062	3.688	15.812
	4.500	3 1/4"-12 x 4.500	4 1/2"-12 x 4.500	4 1/4"-12 x 4.500	4 1/4"-12 x 8.250	5.249	6.200				.375				3.875														7.062	6.000					
	5.000	3 1/2"-12 x 5.000	5"-12 x 5.000	4 3/4"-12 x 5.000	4 3/4"-12 x 9.000	5.749	6.700				.375				4.250														7.562	6.500					
	5.500	4"-12 x 5.500	5 1/2"-12 x 5.500	5 1/4"-12 x 5.500	5 1/4"-12 x 10.000	6.249	7.125				.375				4.625														7.938	7.000					
BORE	MM	KM & KF	KD	KI	KA	B	BC	C	CC	CD	CS	CX	CY	CZ	D	E	EE	F	G	J	K	KN	LV	LB	MV	OD	P	R	RR	RS	TR	WB	XV	Y	ZV

NEVA DESIGN

FILE: MH22L2.dwg REV: 09-25-06

27650 Groesbeck Hwy • Roseville, MI 48066-2759 • Phone 586.775.7211 • Fax 586.775.4545 • Toll Free 800.526.7968 • e-mail: sales@peninsularcylinders.com • www.peninsularcylinders.com