SIDE TAPPED

Heavy Duty Steel Air Cylinder

Peninsular Mounting Style: **MH 16**

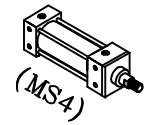

Peninsular Cylinder Co.

NFPA
NAAMS
ISO: DIN-VDMA

ISO 9001:2000 Registered

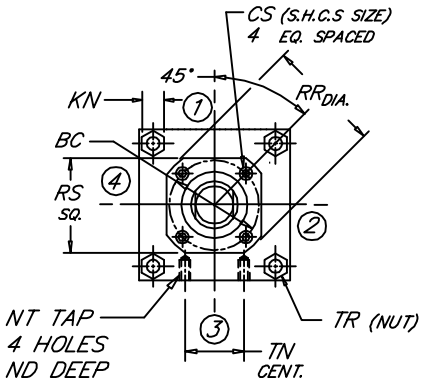

KM (SHORT MALE)
KF (SHORT FEMALE)
KD (FULL MALE)
KI (INTERMEDIATE MALE)
KA (LONG MALE)

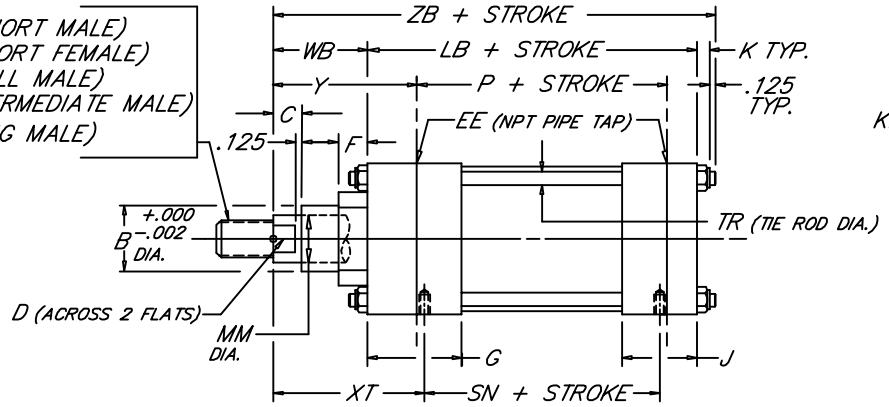

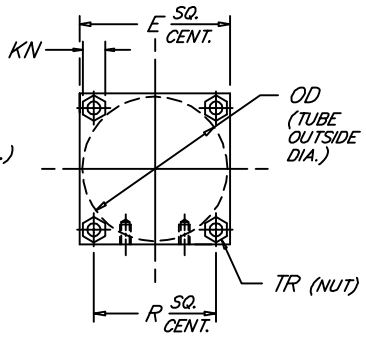

BORE	ROD MM	ROD THREAD X LENGTH KM & KF	KD	KI	KA	B	BC	C	CS	D	E	NPT EE	F	G	J	K	KN	LB	ND	NT	OD	P	R	RR	RS	SN	TN	TR	WB	XT	Y	ZB
8.000	1.375	1"-14 x 1.625	1 3/8"-12 x 1.625	1 1/4"-12 x 1.625	1 1/4"-12 x 2.500	1.999	3.267	.625	.312	1.125	8.500	3/4	.625	2.000	1.500	.750	.938	5.125	1.125	3/4"-10	8.450	3.375	6.435	3.734	3.000	3.250	4.500	.625	1.625	2.812	2.750	7.625
	1.750	1 1/4"-12 x 2.000	1 3/4"-12 x 2.000	1 1/2"-12 x 2.000	1 1/2"-12 x 3.000	2.374	3.267	.750	.312	1.500														3.734	3.000				1.875	3.062	3.000	7.875
	2.000	1 1/2"-12 x 2.250	2"-12 x 2.250	1 3/4"-12 x 2.250	1 3/4"-12 x 3.500	2.624	3.812	.875	.312	1.688														4.312	3.750				2.000	3.188	3.125	8.000
	2.500	1 7/8"-12 x 3.000	2 1/2"-12 x 3.000	2 1/4"-12 x 3.000	2 1/4"-12 x 4.500	3.124	3.812	1.000	.312	2.062														4.312	3.750				2.250	3.438	3.375	8.250
	3.000	2 1/4"-12 x 3.500	3"-12 x 3.500	2 3/4"-12 x 3.500	2 3/4"-12 x 5.500	3.749	4.700	1.000	.375	2.625														5.562	4.500				2.250	3.438	3.375	8.250
	3.500	2 1/2"-12 x 3.500	3 1/2"-12 x 3.500	3 1/4"-12 x 3.500	3 1/4"-12 x 6.500	4.249	5.200	1.000	.375	3.000														6.062	5.000				2.250	3.138	3.375	8.250
	4.000	3"-12 x 4.000	4"-12 x 4.000	3 3/4"-12 x 4.000	3 3/4"-12 x 7.500	4.749	5.700	1.000	.375	3.375														6.562	5.500				2.250	3.438	3.375	8.250
	4.500	3 1/4"-12 x 4.500	4 1/2"-12 x 4.500	4 1/4"-12 x 4.500	4 1/4"-12 x 8.250	5.249	6.200	1.000	.375	3.875														7.062	6.000				2.250	3.438	3.375	8.250
	5.000	3 1/2"-12 x 5.000	5"-12 x 5.000	4 3/4"-12 x 5.000	4 3/4"-12 x 9.000	5.749	6.700	1.000	.375	4.250														7.562	6.500				2.250	3.438	3.375	8.250
	5.500	4"-12 x 5.500	5 1/2"-12 x 5.500	5 1/4"-12 x 5.500	5 1/4"-12 x 10.000	6.249	7.125	1.000	.375	4.625														7.938	7.000				2.250	3.438	3.375	8.250
10.000	1.750	1 1/4"-12 x 2.000	1 3/4"-12 x 2.000	1 1/2"-12 x 2.000	1 1/2"-12 x 3.000	2.374	3.812	.750	.312	1.500	10.625	1	.625	2.250	2.000	.875	1.062	6.375	1.500	1"-8	10.450	4.250	7.920	4.312	3.750	4.125	5.500	.750	1.875	3.125	3.062	9.250
	2.000	1 1/2"-12 x 2.250	2"-12 x 2.250	1 3/4"-12 x 2.250	1 3/4"-12 x 3.500	2.624	3.812	.875	.312	1.688														4.312	3.750				2.000	3.250	3.187	9.375
	2.500	1 7/8"-12 x 3.000	2 1/2"-12 x 3.000	2 1/4"-12 x 3.000	2 1/4"-12 x 4.500	3.124	3.812	1.000	.312	2.062														4.312	3.750				2.250	3.500	3.437	9.625
	3.000	2 1/4"-12 x 3.500	3"-12 x 3.500	2 3/4"-12 x 3.500	2 3/4"-12 x 5.500	3.749	4.700	1.000	.375	2.625														5.562	4.500				2.250	3.500	3.437	9.625
	3.500	2 1/2"-12 x 3.500	3 1/2"-12 x 3.500	3 1/4"-12 x 3.500	3 1/4"-12 x 6.500	4.249	5.200	1.000	.375	3.000														6.062	5.000				2.250	3.500	3.437	9.625
	4.000	3"-12 x 4.000	4"-12 x 4.000	3 3/4"-12 x 4.000	3 3/4"-12 x 7.500	4.749	5.700	1.000	.375	3.375														6.562	5.500				2.250	3.500	3.437	9.625
	4.500	3 1/4"-12 x 4.500	4 1/2"-12 x 4.500	4 1/4"-12 x 4.500	4 1/4"-12 x 8.250	5.249	6.200	1.000	.375	3.875														7.062	6.000				2.250	3.500	3.437	9.625
	5.000	3 1/2"-12 x 5.000	5"-12 x 5.000	4 3/4"-12 x 5.000	4 3/4"-12 x 9.000	5.749	6.700	1.000	.375	4.250														7.562	6.500				2.250	3.500	3.437	9.625
	5.500	4"-12 x 5.500	5 1/2"-12 x 5.500	5 1/4"-12 x 5.500	5 1/4"-12 x 10.000	6.249	7.125	1.000	.375	4.625														7.938	7.000				2.250	3.500	3.437	9.625
12.000	2.000	1 1/2"-12 x 2.250	2"-12 x 2.250	1 3/4"-12 x 2.250	1 3/4"-12 x 3.500	2.624	3.812	.875	.312	1.688	12.750	1	.625	2.250	2.000	.875	1.062	6.875	1.500	1"-8	12.450	4.750	9.405	4.312	3.750	4.625	7.250	.750	2.000	3.250	3.187	9.875
	2.500	1 7/8"-12 x 3.000	2 1/2"-12 x 3.000	2 1/4"-12 x 3.000	2 1/4"-12 x 4.500	3.124	3.812	1.000	.312	2.062														4.312	3.750				2.250	3.500	3.437	10.125
	3.000	2 1/4"-12 x 3.500	3"-12 x 3.500	2 3/4"-12 x 3.500	2 3/4"-12 x 5.500	3.749	4.700	1.000	.375	2.625														5.562	4.500				2.250	3.500	3.437	10.125
	3.500	2 1/2"-12 x 3.500	3 1/2"-12 x 3.500	3 1/4"-12 x 3.500	3 1/4"-12 x 6.500	4.249	5.200	1.000	.375	3.000														6.062	5.000				2.250	3.500	3.437	10.125
	4.000	3"-12 x 4.000	4"-12 x 4.000	3 3/4"-12 x 4.000	3 3/4"-12 x 7.500	4.749	5.700	1.000	.375	3.375														6.562	5.500				2.250	3.500	3.437	10.125
	4.500	3 1/4"-12 x 4.500	4 1/2"-12 x 4.500	4 1/4"-12 x 4.500	4 1/4"-12 x 8.250	5.249	6.200	1.000	.375	3.875														7.062	6.000				2.250	3.500	3.437	10.125
	5.000	3 1/2"-12 x 5.000	5"-12 x 5.000	4 3/4"-12 x 5.000	4 3/4"-12 x 9.000	5.749	6.700	1.000	.375	4.250														7.562	6.500				2.250	3.500	3.437	10.125
	5.500	4"-12 x 5.500	5 1/2"-12 x 5.500	5 1/4"-12 x 5.500	5 1/4"-12 x 10.000	6.249	7.125	1.000	.375	4.625														7.938	7.000				2.250	3.500	3.437	10.125
14.000	2.500	1 7/8"-12 x 3.000	2 1/2"-12 x 3.000	2 1/4"-12 x 3.000	2 1/4"-12 x 4.500	3.124	3.812		.312	2.062	14.750	1 1/4	.625	2.750	2.250	1.000	1.250	8.125	1.875	1 1/4"-7	14.450	5.625	10.889	4.312	3.750	5.500	8.375	.875	2.250	3.812	3.688	11.500
	3.000	2 1/4"-12 x 3.500	3"-12 x 3.500	2 3/4"-12 x 3.500	2 3/4"-12 x 5.500	3.749	4.700		.375	2.625														5.562	4.500							
	3.500	2 1/2"-12 x 3.500	3 1/2"-12 x 3.500	3 1/4"-12 x 3.500	3 1/4"-12 x 6.500	4.249	5.200		.375	3.000														6.062	5.000							
	4.000	3"-12 x 4.000	4"-12 x 4.000	3 3/4"-12 x 4.000	3 3/4"-12 x 7.500	4.749	5.700		.375	3.375														6.562	5.500							
	4.500	3 1/4"-12 x 4.500	4 1/2"-12 x 4.500	4 1/4"-12 x 4.500	4 1/4"-12 x 8.250	5.249	6.200		.375	3.875														7.062	6.000							
	5.000	3 1/2"-12 x 5.000	5"-12 x 5.000	4 3/4"-12 x 5.000	4 3/4"-12 x 9.000	5.749	6.700		.375	4.250														7.562	6.500							
	5.500	4"-12 x 5.500	5 1/2"-12 x 5.500	5 1/4"-12 x 5.500	5 1/4"-12 x 10.000	6.249	7.125		.375	4.625														7.938	7.000							
BORE	MM	KM & KF	KD	KI	KA	B	BC	C	CS	D	E	EE	F	G	J	K	KN	LB	ND	NT	OD	P	R	RR	RS	SN	TN	TR	WB	XT	Y	ZB

NEVA DESIGN

FILE: MH16L2.dwg REV: 09-25-06

27650 Groesbeck Hwy • Roseville, MI 48066-2759 • Phone 586.775.7211 • Fax 586.775.4545 • Toll Free 800.526.7968 • e-mail: sales@peninsularcylinders.com • www.peninsularcylinders.com