FOOT SIDE LUGS

Medium Duty Aluminum Air Cylinder

Peninsular Mounting Style: **LM 1**

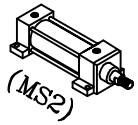

Peninsular Cylinder Co.

NFPA
NAAMS
ISO: DIN-VDMA

ISO 9001:2000 Registered

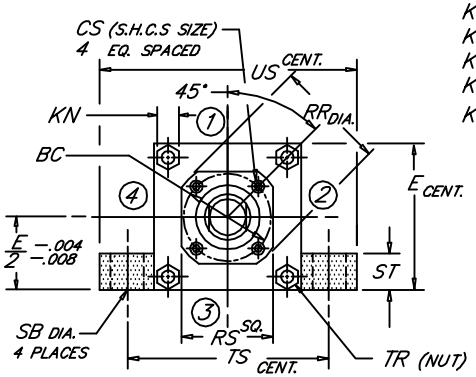

KM (SHORT MALE)
KF (SHORT FEMALE)
KD (FULL MALE)
KI (INTERMEDIATE MALE)
KA (LONG MALE)

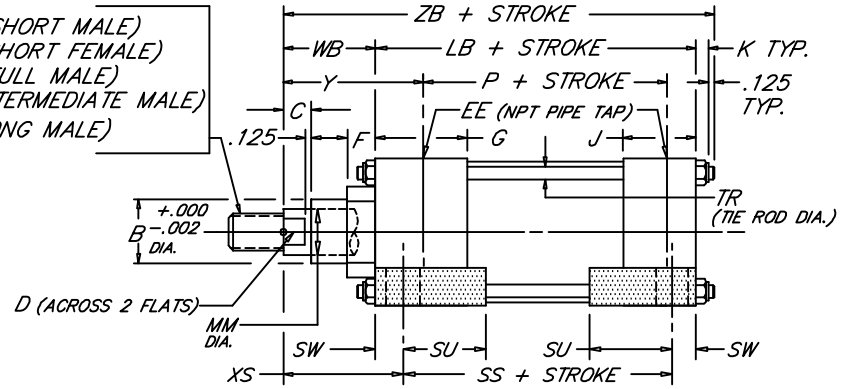

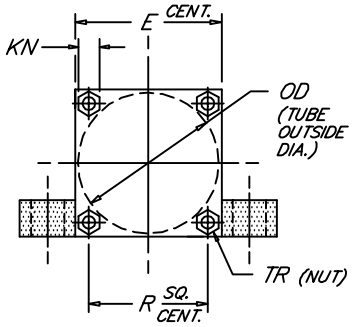

BORE	ROD MM	ROD THREAD X LENGTH KM & KF	KD	KI	KA	B	BC	C	CS	D	E	NPT EE	F	G	J	K	KN	LB	OD	P	R	RR	RS	SB	SS	ST	SU	SW	TR	TS	US	WB	XS	Y	ZB
8.000	1.375	1"-14 x 1.625	1 3/8"-12 x 1.625	1 1/4"-12 x 1.625	1 1/4"-12 x 2.500	1.999	3.267	.625	.312	1.125	8.500	3/4	.625	2.000	1.500	.750	.938	5.125	8.450	3.375	6.435	3.734	3.000	.812	3.750	1.000	1.562	.6875	.625	9.875	11.250	1.625	2.313	2.750	7.625
	1.750	1 1/4"-12 x 2.000	1 3/4"-12 x 2.000	1 1/2"-12 x 2.000	1 1/2"-12 x 3.000	2.374	3.267	.750	.312	1.500												3.734	3.000									1.875	2.562	3.000	7.875
	2.000	1 1/2"-12 x 2.250	2"-12 x 2.250	1 3/4"-12 x 2.250	1 3/4"-12 x 3.500	2.624	3.812	.875	.312	1.688												4.312	3.750									2.000	2.688	3.125	8.000
	2.500	1 7/8"-12 x 3.000	2 1/2"-12 x 3.000	2 1/4"-12 x 3.000	2 1/4"-12 x 4.500	3.124	3.812	1.000	.312	2.062												4.312	3.750									2.250	2.938	3.375	8.250
	3.000	2 1/4"-12 x 3.500	3"-12 x 3.500	2 3/4"-12 x 3.500	2 3/4"-12 x 5.500	3.749	4.700	1.000	.375	2.625												5.562	4.500									2.250	2.938	3.375	8.250
	3.500	2 1/2"-12 x 3.500	3 1/2"-12 x 3.500	3 1/4"-12 x 3.500	3 1/4"-12 x 6.500	4.249	5.200	1.000	.375	3.000												6.062	5.000									2.250	2.938	3.375	8.250
	4.000	3"-12 x 4.000	4"-12 x 4.000	3 3/4"-12 x 4.000	3 3/4"-12 x 7.500	4.749	5.700	1.000	.375	3.375												6.562	5.500									2.250	2.938	3.375	8.250
	4.500	3 1/4"-12 x 4.500	4 1/2"-12 x 4.500	4 1/4"-12 x 4.500	4 1/4"-12 x 8.250	5.249	6.200	1.000	.375	3.875												7.062	6.000									2.250	2.938	3.375	8.250
	5.000	3 1/2"-12 x 5.000	5"-12 x 5.000	4 3/4"-12 x 5.000	4 3/4"-12 x 9.000	5.749	6.700	1.000	.375	4.250												7.562	6.500									2.250	2.938	3.375	8.250
	5.500	4"-12 x 5.500	5 1/2"-12 x 5.500	5 1/4"-12 x 5.500	5 1/4"-12 x 10.000	6.249	7.125	1.000	.375	4.625												7.938	7.000									2.250	2.938	3.375	8.250
10.000	1.750	1 1/4"-12 x 2.000	1 3/4"-12 x 2.000	1 1/2"-12 x 2.000	1 1/2"-12 x 3.000	2.374	3.812	.750	.312	1.500	10.625	1	.625	2.250	2.000	.875	1.062	6.375	10.450	4.250	7.920	4.312	3.750	1.062	4.625	1.250	2.000	.875	.750	12.375	14.125	1.875	2.750	3.062	9.250
	2.000	1 1/2"-12 x 2.250	2"-12 x 2.250	1 3/4"-12 x 2.250	1 3/4"-12 x 3.500	2.624	3.812	.875	.312	1.688												4.312	3.750									2.000	2.875	3.187	9.375
	2.500	1 7/8"-12 x 3.000	2 1/2"-12 x 3.000	2 1/4"-12 x 3.000	2 1/4"-12 x 4.500	3.124	3.812	1.000	.312	2.062												4.312	3.750									2.250	3.125	3.437	9.625
	3.000	2 1/4"-12 x 3.500	3"-12 x 3.500	2 3/4"-12 x 3.500	2 3/4"-12 x 5.500	3.749	4.700	1.000	.375	2.625												5.562	4.500									2.250	3.125	3.437	9.625
	3.500	2 1/2"-12 x 3.500	3 1/2"-12 x 3.500	3 1/4"-12 x 3.500	3 1/4"-12 x 6.500	4.249	5.200	1.000	.375	3.000												6.062	5.000									2.250	3.125	3.437	9.625
	4.000	3"-12 x 4.000	4"-12 x 4.000	3 3/4"-12 x 4.000	3 3/4"-12 x 7.500	4.749	5.700	1.000	.375	3.375												6.562	5.500									2.250	3.125	3.437	9.625
	4.500	3 1/4"-12 x 4.500	4 1/2"-12 x 4.500	4 1/4"-12 x 4.500	4 1/4"-12 x 8.250	5.249	6.200	1.000	.375	3.875												7.062	6.000									2.250	3.125	3.437	9.625
	5.000	3 1/2"-12 x 5.000	5"-12 x 5.000	4 3/4"-12 x 5.000	4 3/4"-12 x 9.000	5.749	6.700	1.000	.375	4.250												7.562	6.500									2.250	3.125	3.437	9.625
	5.500	4"-12 x 5.500	5 1/2"-12 x 5.500	5 1/4"-12 x 5.500	5 1/4"-12 x 10.000	6.249	7.125	1.000	.375	4.625												7.938	7.000									2.250	3.125	3.437	9.625
12.000	2.000	1 1/2"-12 x 2.250	2"-12 x 2.250	1 3/4"-12 x 2.250	1 3/4"-12 x 3.500	2.624	3.812	.875	.312	1.688	12.750	1	.625	2.250	2.000	.875	1.062	6.875	12.450	4.750	9.405	4.312	3.750	1.062	5.125	1.250	2.000	.875	.750	14.500	16.250	2.000	2.875	3.187	9.875
	2.500	1 7/8"-12 x 3.000	2 1/2"-12 x 3.000	2 1/4"-12 x 3.000	2 1/4"-12 x 4.500	3.124	3.812	1.000	.312	2.062												4.312	3.750									2.250	3.125	3.437	10.125
	3.000	2 1/4"-12 x 3.500	3"-12 x 3.500	2 3/4"-12 x 3.500	2 3/4"-12 x 5.500	3.749	4.700	1.000	.375	2.625												5.562	4.500									2.250	3.125	3.437	10.125
	3.500	2 1/2"-12 x 3.500	3 1/2"-12 x 3.500	3 1/4"-12 x 3.500	3 1/4"-12 x 6.500	4.249	5.200	1.000	.375	3.000												6.062	5.000									2.250	3.125	3.437	10.125
	4.000	3"-12 x 4.000	4"-12 x 4.000	3 3/4"-12 x 4.000	3 3/4"-12 x 7.500	4.749	5.700	1.000	.375	3.375												6.562	5.500									2.250	3.125	3.437	10.125
	4.500	3 1/4"-12 x 4.500	4 1/2"-12 x 4.500	4 1/4"-12 x 4.500	4 1/4"-12 x 8.250	5.249	6.200	1.000	.375	3.875												7.062	6.000									2.250	3.125	3.437	10.125
	5.000	3 1/2"-12 x 5.000	5"-12 x 5.000	4 3/4"-12 x 5.000	4 3/4"-12 x 9.000	5.749	6.700	1.000	.375	4.250												7.562	6.500									2.250	3.125	3.437	10.125
	5.500	4"-12 x 5.500	5 1/2"-12 x 5.500	5 1/4"-12 x 5.500	5 1/4"-12 x 10.000	6.249	7.125	1.000	.375	4.625												7.938	7.000									2.250	3.125	3.437	10.125
14.000	2.500	1 7/8"-12 x 3.000	2 1/2"-12 x 3.000	2 1/4"-12 x 3.000	2 1/4"-12 x 4.500	3.124	3.812		.312	2.062	14.750	1 1/4	.625	2.750	2.250	1.000	1.250	8.125	14.450	5.625	10.889	4.312	3.750	1.312	5.875	1.500	2.500	1.125	.875	17.000	19.250	2.250	3.375	3.688	11.500
	3.000	2 1/4"-12 x 3.500	3"-12 x 3.500	2 3/4"-12 x 3.500	2 3/4"-12 x 5.500	3.749	4.700		.375	2.625												5.562	4.500												
	3.500	2 1/2"-12 x 3.500	3 1/2"-12 x 3.500	3 1/4"-12 x 3.500	3 1/4"-12 x 6.500	4.249	5.200		.375	3.000												6.062	5.000												
	4.000	3"-12 x 4.000	4"-12 x 4.000	3 3/4"-12 x 4.000	3 3/4"-12 x 7.500	4.749	5.700		.375	3.375												6.562	5.500												
	4.500	3 1/4"-12 x 4.500	4 1/2"-12 x 4.500	4 1/4"-12 x 4.500	4 1/4"-12 x 8.250	5.249	6.200		.375	3.875												7.062	6.000												
	5.000	3 1/2"-12 x 5.000	5"-12 x 5.000	4 3/4"-12 x 5.000	4 3/4"-12 x 9.000	5.749	6.700		.375	4.250												7.562	6.500												
	5.500	4"-12 x 5.500	5 1/2"-12 x 5.500	5 1/4"-12 x 5.500	5 1/4"-12 x 10.000	6.249	7.125		.375	4.625												7.938	7.000												
BORE	MM	KM & KF	KD	KI	KA	B	BC	C	CS	D	E	EE	F	G	J	K	KN	LB	OD	P	R	RR	RS	SB	SS	ST	SU	SW	TR	TS	US	WB	XS	Y	ZB

NEVA DESIGN

FILE: LM1L2.dwg REV: 09-25-06

27650 Groesbeck Hwy • Roseville, MI 48066-2759 • Phone 586.775.7211 • Fax 586.775.4545 • Toll Free 800.526.7968 • e-mail: sales@peninsularcylinders.com • www.peninsularcylinders.com