NO MOUNT

Peninsular
Mounting Style: HP 0

Heavy Duty Hydraulic Cylinder • 3000 P.S.I. Working Pressure • 5000 P.S.I. Rated Pressure

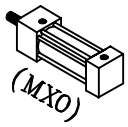

Peninsular Cylinder Co.

NFPA
NAAMS
ISO: DIN-VDMA

ISO 9001:2000 Registered

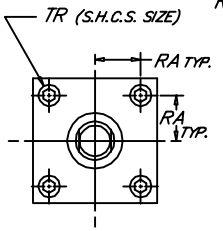

8" BORE

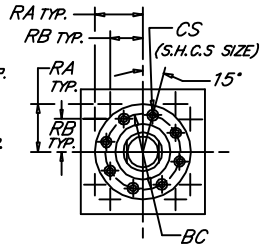

10" & 12" BORES

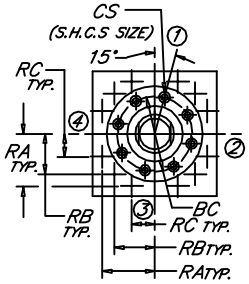

14" BORE

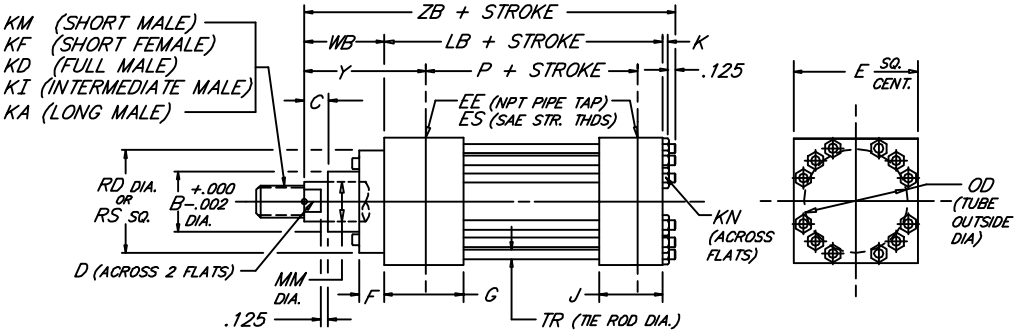

BORE	ROD MM	ROD THREAD X LENGTH KM & KF	KD	KI	KA	B	BC	C	CS	D	E	NPT EE	SAE ES	F	G	J	K	KN	LB	P	OD	RA	RB	RC	RD	RS	TR	WB	Y	ZB
8.000	3.500	2 1/2"-12 x 3.500	3 1/2"-12 x 3.500	3 1/4"-12 x 3.500	3 1/4"-12 x 6.500	4.249	---	1.000	---	3.000	9.500	1 1/2	-24	1.000	3.000	3.000	1.188	1.844	9.500	6.125	9.250	3.750	---	---	---	9.500	1.250	2.250	3.938	13.063
	4.000	3"-12 x 4.000	4"-12 x 4.000	3 3/4"-12 x 4.000	3 3/4"-12 x 7.500	4.749				3.375																				
	4.500	3 1/4"-12 x 4.500	4 1/2"-12 x 4.500	4 1/4"-12 x 4.500	4 1/4"-12 x 8.250	5.249				3.875																				
	5.000	3 1/2"-12 x 5.000	5"-12 x 5.000	4 3/4"-12 x 5.000	4 3/4"-12 x 9.000	5.749				4.250																				
	5.500	4"-12 x 5.500	5 1/2"-12 x 5.500	5 1/4"-12 x 5.500	5 1/4"-12 x 10.000	6.249				4.625																				
10.000	4.500	3 1/4"-12 x 4.500	4 1/2"-12 x 4.500	4 1/4"-12 x 4.500	4 1/4"-12 x 8.250	5.249	6.375	1.000	.500	3.875	12.625	2	-32	.500	3.688	3.688	1.094	1.656	12.125	8.500	11.750	5.291	3.775	---	7.260	---	1.125	2.937	4.750	16.281
	5.000	3 1/2"-12 x 5.000	5"-12 x 5.000	4 3/4"-12 x 5.000	4 3/4"-12 x 9.000	5.749	6.875		.500	4.250				.500											7.750			3.187	5.000	16.531
	5.500	4"-12 x 5.500	5 1/2"-12 x 5.500	5 1/4"-12 x 5.500	5 1/4"-12 x 10.000	6.249	7.375		.500	4.625				.500											8.260			3.187	5.000	16.531
	6.000	4 1/2"-12 x 6.000	6"-12 x 6.000	5 3/4"-12 x 6.000	5 3/4"-12 x 10.000	6.749	8.500		.625	5.125				.875											10.000			3.437	5.250	16.781
	7.000	5"-12 x 7.000	7"-12 x 7.000	6 1/2"-12 x 7.000	6 1/2"-12 x 10.000	7.749	9.437		.625	6.000				.875											10.500			3.437	5.250	16.781
12.000	5.500	4"-12 x 5.500	5 1/2"-12 x 5.500	5 1/4"-12 x 5.500	5 1/4"-12 x 10.000	6.249	7.375	1.000	.500	4.625	14.875	2 1/2	-32	.500	4.438	4.438	1.188	1.844	14.500	10.125	14.000	6.270	4.555	---	8.260	---	1.250	3.187	5.375	19.000
	6.000	4 1/2"-12 x 6.000	6"-12 x 6.000	5 3/4"-12 x 6.000	5 3/4"-12 x 10.000	6.749	8.500		.625	5.125				.875											10.000			3.437	5.625	19.250
	7.000	5"-12 x 7.000	7"-12 x 7.000	6 1/2"-12 x 7.000	6 1/2"-12 x 10.000	7.749	9.437		.625	6.000				.875											10.500			3.437	5.625	19.250
	8.000	5 3/4"-12 x 8.000	8"-12 x 8.000	7 1/2"-12 x 8.000	7 1/2"-12 x 10.000	8.749	10.500		.625	7.000				.875											12.000			3.437	5.625	19.250
14.000	7.000	5"-12 x 7.000	7"-12 x 7.000	6 1/2"-12 x 7.000	6 1/2"-12 x 10.000	7.749	9.437	1.000	.625	6.000	17.125	3	-32	.875	4.875	4.875	1.188	1.844	15.625	10.875	16.000	7.485	6.143	4.409	10.500	---	1.250	3.437	5.625	20.375
	8.000	5 3/4"-12 x 8.000	8"-12 x 8.000	7 1/2"-12 x 8.000	7 1/2"-12 x 12.000	8.749	10.500			7.000															12.000					
	9.000	6 1/2"-12 x 9.000	9"-12 x 9.000	8 1/2"-12 x 9.000	8 1/2"-12 x 13.500	9.749	11.500			7.875															13.000					
	10.000	7 1/4"-12 x 10.000	10"-12 x 10.000	9 1/2"-12 x 10.000	9 1/2"-12 x 15.000	10.749	12.500			8.625															14.000					
BORE	MM	KM & KF	KD	KI	KA	B	BC	C	CS	D	E	EE	ES	F	G	J	K	KN	LB	P	OD	RA	RB	RC	RD	RS	TR	WB	Y	ZB

NEVA DESIGN

FILE: HP00L2.dwg REV: 09-25-06

27650 Groesbeck Hwy • Roseville, MI 48066-2759 • Phone 586.775.7211 • Fax 586.775.4545 • Toll Free 800.526.7968 • e-mail: sales@peninsularcylinders.com • www.peninsularcylinders.com