PENINSULAR®
CYLINDER CO.

Peninsular Product Line Catalog

Binder Table of Contents

AIR CYLINDERS		Section Number
Series MH	NFPA, *Heavy-Duty Steel Air Cylinders (250PSI)*	1
Series LM	NFPA, *Medium-Duty Aluminum Air Cylinders (250PSI)*	2
Series IMH	METRIC, *Heavy-Duty Steel Air Cylinders (17 BAR / 250PSI)*	5
Series ILM	METRIC, *Medium-Duty Aluminum Air Cylinders (17 BAR / 250PSI)*	6

HYDRAULIC CYLINDERS		Section Number
Series HP	NFPA, *High Pressure Hydraulic Cylinders (3000 PSI)*	3
Series LH	NFPA, *Low Pressure (up to 1500 PSI)*	4
Series IHP	METRIC, *High Pressure Hydraulic Cylinders (210 BAR / 3000PSI)*	7

ADDITIONAL PRODUCTS AND INFORMATION	Section Number
NFPA Cylinder Accessories	8
METRIC Air Cylinder Accessories	9
METRIC High Pressure Hydraulic Cylinder Accessories	10
Die Lifter Units and Slides	11

www.peninsularcylinders.com

1-800-526-7968

27650 Groesbeck Highway * Roseville, Michigan 48066-2759

Phone: (586)-775-7211 * Fax: (586) 775-4545 * email: sales@peninsularcylinders.com

REV. 2/9/2010

PENINSULAR®
CYLINDER CO.

Section 1

Table of Contents

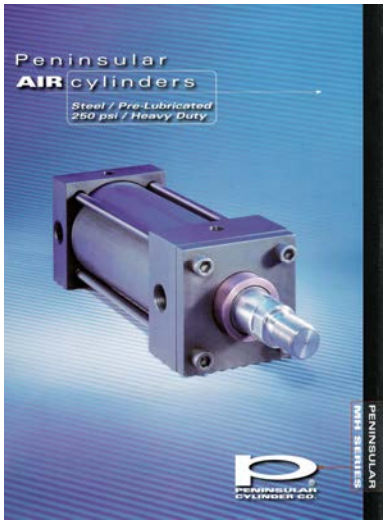

Model MH - *NFPA, Heavy Duty Steel Air Cylinders*

Our Blue Model MH - FAB Brochure - contains information about :

- *FEATURES, ADVANTAGES & BENEFITS of the Model MH Air Cylinder*
- *HOW TO ORDER the Model MH NFPA Air Cylinder*

Model MH - Air Cylinder Dimensional Data

Page 1.00 MH 0 — No Mount Single Rod (Available for Front or Rear Flush Mounts) (MX0)	Page 1.08 MH 8 — Head Tie Rod Extended (MX3)	Page 1.18 MH 18 — Cap Square Flange (MF6)
Page 1.01 MH 1 — Foot Side Lugs (MS2)	Page 1.11 MH 11 — Cap Tie Rod Extended (MX2)	Page 1.19 MH 19 — Head Square Block (ME3)
Page 1.02 MH 2 — Head Trunnion (MT1)	Page 1.12 MH 12 — Head & Cap Tie Rod Extended (MX1)	Page 1.20 MH 20 — Cap Square Block (ME4)
Page 1.03 MH 3 — Cap Fixed Clevis (MP1)	Page 1.13 MH 13 — End Angles (MS1)	Page 1.21 MH 21 — Cap Detachable Eye (MP4)
Page 1.04 MH 4 — Head Rectangular Flange (MF1)	Page 1.14 MH 14 — End Lugs (MS7)	Page 1.22 MH 22 — Cap-Fixed Spherical Eye (MP5)
Page 1.05 MH 5 — Cap Rectangular Flange (MF2)	Page 1.15 MH 15 — Centerline Lugs (MS3)	Page 1.24 MH 24 — Cap Detachable Clevis (MP2)
Page 1.06 MH 6 — Intermediate Trunnion (MT4)	Page 1.16 MH 16 — Side Tapped (MS4)	Page 1.25 MH 25 — Cap Fixed Eye (MP3)
Page 1.07 MH 7 — Cap Trunnion (MT2)	Page 1.17 MH 17 — Head Square Flange (MF5)	Page 1.27 MH 27 — Cap Detachable Clevis (Equals MP1 envelope.)

Pages 1.28 & 1.29 — Cylinder "Push" & "Pull" Force Charts: (use to select the correct cylinder Bore Size)

www.peninsularcylinders.com

1-800-526-7968

27650 Groesbeck Highway * Roseville, Michigan 48066-2759

(586) 775-7211 * (586) 775-4545 fax * email: sales@peninsularcylinders.com

REV. 2/9/2010

NO MOUNT

Heavy Duty Steel Air Cylinder

Peninsular Mounting Style: **MH 0**

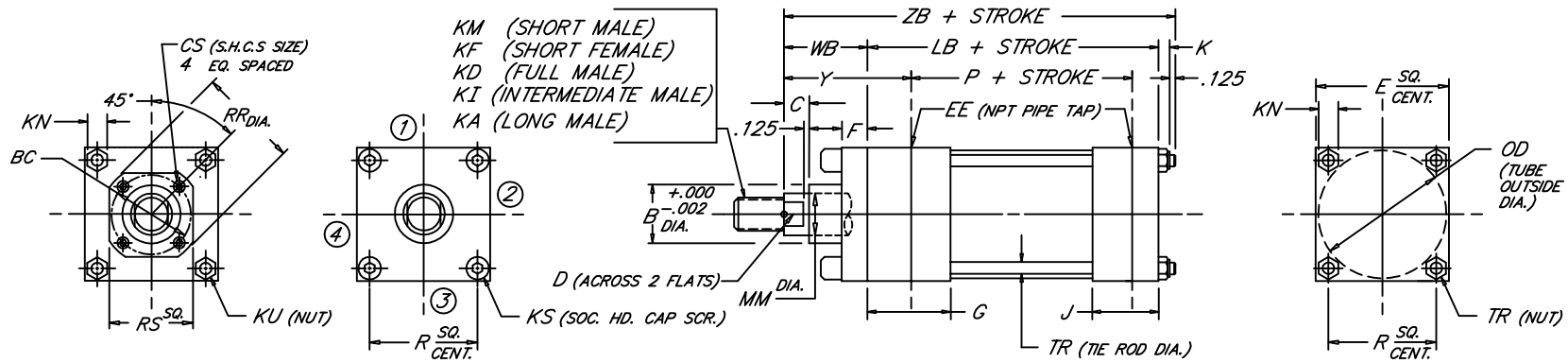

BORE	ROD MM	ROD THREAD X LENGTH KM & KF	KD	KI	KA	B	BC	C	CS	D	E	NPT EE	F	G	J	K	KN	KS	KU	LB	OD	P	R	RR	RS	TR	WB	Y	ZB
1.500	.625	7/16"-20 x .750	5/8"-18 x .750	1/2"-20 x .750	1/2"-20 x 1.125	1.124	---	.375	---	.500	2.000	3/8	.375	1.500	1.000	.312	.438	.250	---	3.625	1.750	2.335	1.428	---	---	.250	1.000	1.875	5.062
	1.000	3/4"-16 x 1.125	1"-14 x 1.125	7/8"-14 x 1.125	7/8"-14 x 1.875	1.499		.500		.875																	1.375	2.250	5.437
2.000	.625	7/16"-20 x .750	5/8"-18 x .750	1/2"-20 x .750	1/2"-20 x 1.125	1.124	---	.375	---	.500	2.500	3/8	.375	1.500	1.000	.344	.500	.312	---	3.625	2.250	2.335	1.838	---	---	.312	1.000	1.875	5.094
	1.000	3/4"-16 x 1.125	1"-14 x 1.125	7/8"-14 x 1.125	7/8"-14 x 1.875	1.499		.500		.875																	1.375	2.250	5.469
	1.375	1"-14 x 1.625	1 3/8"-12 x 1.625	1 1/4"-12 x 1.625	1 1/4"-12 x 2.500	1.999		.625		1.125																	1.625	2.500	5.719
2.500	.625	7/16"-20 x .750	5/8"-18 x .750	1/2"-20 x .750	1/2"-20 x 1.125	1.124	---	.375	---	.500	3.000	3/8	.375	1.500	1.000	.344	.500	.312	---	3.750	2.750	2.460	2.192	---	---	.312	1.000	1.875	5.219
	1.000	3/4"-16 x 1.125	1"-14 x 1.125	7/8"-14 x 1.125	7/8"-14 x 1.875	1.499		.500		.875																	1.375	2.250	5.594
	1.375	1"-14 x 1.625	1 3/8"-12 x 1.625	1 1/4"-12 x 1.625	1 1/4"-12 x 2.500	1.999		.625		1.125																	1.625	2.500	5.844
	1.750	1 1/4"-12 x 2.000	1 3/4"-12 x 2.000	1 1/2"-12 x 2.000	1 1/2"-12 x 3.000	2.374		.750		1.500																	1.875	2.750	6.094
3.250	1.000	3/4"-16 x 1.125	1"-14 x 1.125	7/8"-14 x 1.125	7/8"-14 x 1.875	1.499	---	.500	---	.875	3.750	1/2	.625	1.750	1.250	.438	.562	.375	---	4.250	3.500	2.750	2.758	---	---	.375	1.375	2.375	6.188
	1.375	1"-14 x 1.625	1 3/8"-12 x 1.625	1 1/4"-12 x 1.625	1 1/4"-12 x 2.500	1.999		.625		1.125																	1.625	2.625	6.438
	1.750	1 1/4"-12 x 2.000	1 3/4"-12 x 2.000	1 1/2"-12 x 2.000	1 1/2"-12 x 3.000	2.374		.750		1.500																	1.875	2.875	6.688
	2.000	1 1/2"-12 x 2.250	2"-12 x 2.250	1 3/4"-12 x 2.250	1 3/4"-12 x 3.500	2.624		.875		1.688																	2.000	3.000	6.813
4.000	1.000	3/4"-16 x 1.125	1"-14 x 1.125	7/8"-14 x 1.125	7/8"-14 x 1.875	1.499	2.562	.500	.250	.875	4.500	1/2	.625	1.750	1.250	.438	.562	---	.375	4.250	4.250	2.750	3.323	2.969	2.500	.375	1.375	2.375	6.188
	1.375	1"-14 x 1.625	1 3/8"-12 x 1.625	1 1/4"-12 x 1.625	1 1/4"-12 x 2.500	1.999	2.562	.625	.250	1.125								---	.375					2.969	2.500		1.625	2.625	6.438
	1.750	1 1/4"-12 x 2.000	1 3/4"-12 x 2.000	1 1/2"-12 x 2.000	1 1/2"-12 x 3.000	2.374	3.267	.750	.312	1.500								---	.375					3.734	3.000		1.875	2.875	6.688
	2.000	1 1/2"-12 x 2.250	2"-12 x 2.250	1 3/4"-12 x 2.250	1 3/4"-12 x 3.500	2.624	---	.875	---	1.688								.375	---					---	---		2.000	3.000	6.813
	2.500	1 7/8"-12 x 3.000	2 1/2"-12 x 3.000	2 1/4"-12 x 3.000	2 1/4"-12 x 4.500	3.124	---	1.000	---	2.062								.375	---					---	---		2.250	3.250	7.063
5.000	1.000	3/4"-16 x 1.125	1"-14 x 1.125	7/8"-14 x 1.125	7/8"-14 x 1.875	1.499	2.562	.500	.250	.875	5.500	1/2	.625	1.750	1.250	.594	.750	---	.500	4.500	5.250	3.000	4.101	2.969	2.500	.500	1.375	2.375	6.594
	1.375	1"-14 x 1.625	1 3/8"-12 x 1.625	1 1/4"-12 x 1.625	1 1/4"-12 x 2.500	1.999	2.562	.625	.250	1.125								---	.500					2.969	2.500		1.625	2.625	6.844
	1.750	1 1/4"-12 x 2.000	1 3/4"-12 x 2.000	1 1/2"-12 x 2.000	1 1/2"-12 x 3.000	2.374	3.267	.750	.312	1.500								---	.500					3.734	3.000		1.875	2.875	7.094
	2.000	1 1/2"-12 x 2.250	2"-12 x 2.250	1 3/4"-12 x 2.250	1 3/4"-12 x 3.500	2.624	3.812	.875	.312	1.688								---	.500					4.312	3.750		2.000	3.000	7.219
	2.500	1 7/8"-12 x 3.000	2 1/2"-12 x 3.000	2 1/4"-12 x 3.000	2 1/4"-12 x 4.500	3.124	3.812	1.000	.312	2.062								---	.500					4.312	3.750		2.250	3.250	7.469
	3.000	2 1/4"-12 x 3.500	3"-12 x 3.500	2 3/4"-12 x 3.500	2 3/4"-12 x 5.500	3.749	---	1.000	---	2.625								.500	---					---	---		2.250	3.250	7.469
	3.500	2 1/2"-12 x 3.500	3 1/2"-12 x 3.500	3 1/4"-12 x 3.500	3 1/4"-12 x 6.500	4.249	---	1.000	---	3.000								.500	---					---	---		2.250	3.250	7.469
6.000	1.375	1"-14 x 1.625	1 3/8"-12 x 1.625	1 1/4"-12 x 1.625	1 1/4"-12 x 2.500	1.999	3.267	.625	.312	1.125	6.500	3/4	.625	2.000	1.500	.594	.750	---	.500	5.000	6.250	3.250	4.879	3.734	3.000	.500	1.625	2.750	7.344
	1.750	1 1/4"-12 x 2.000	1 3/4"-12 x 2.000	1 1/2"-12 x 2.000	1 1/2"-12 x 3.000	2.374	3.267	.750	.312	1.500			.625					---	.500					3.734	3.000		1.875	3.000	7.594
	2.000	1 1/2"-12 x 2.250	2"-12 x 2.250	1 3/4"-12 x 2.250	1 3/4"-12 x 3.500	2.624	3.812	.875	.312	1.688			.625					---	.500					4.312	3.750		2.000	3.125	7.719
	2.500	1 7/8"-12 x 3.000	2 1/2"-12 x 3.000	2 1/4"-12 x 3.000	2 1/4"-12 x 4.500	3.124	3.812	1.000	.312	2.062			.625					---	.500					4.312	3.750		2.250	3.375	7.969
	3.000	2 1/4"-12 x 3.500	3"-12 x 3.500	2 3/4"-12 x 3.500	2 3/4"-12 x 5.500	3.749	4.700	1.000	.375	2.625			.625					---	.500					5.562	4.500		2.250	3.375	7.969
	3.500	2 1/2"-12 x 3.500	3 1/2"-12 x 3.500	3 1/4"-12 x 3.500	3 1/4"-12 x 6.500	4.249	5.200	1.000	.375	3.000			.625					---	.500					6.062	5.000		2.250	3.375	7.969
	4.000	3"-12 x 4.000	4"-12 x 4.000	3 3/4"-12 x 4.000	3 3/4"-12 x 7.500	4.749	---	1.000	---	3.375			.750					.500	---					---	---		2.250	3.375	7.969
BORE	MM	KM & KF	KD	KI	KA	B	BC	C	CS	D	E	EE	F	G	J	K	KN	KS	KU	LB	OD	P	R	RR	RS	TR	WB	Y	ZB

1.00

FILE: 1.00_MH0S2.dwg REV: 02/09/2010

27650 Groesbeck Hwy • Roseville, MI 48066-2759 • Phone 586.775.7211 • Fax 586.775.4545 • Toll Free 800.526.7968 • e-mail: sales@peninsularcylinders.com • www.peninsularcylinders.com

NO MOUNT

Heavy Duty Steel Air Cylinder

Peninsular Mounting Style: **MH 0**

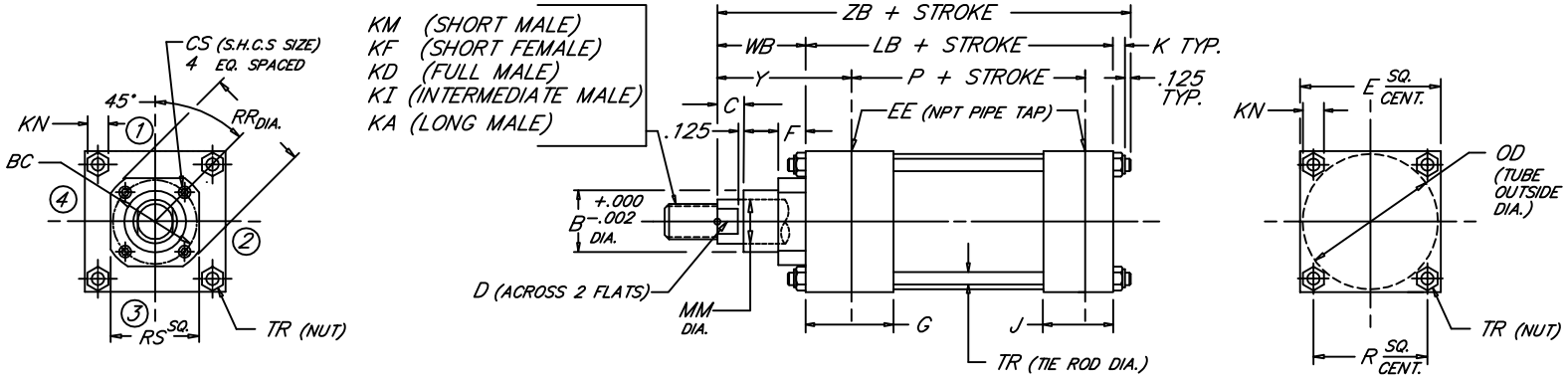

BORE	ROD MM	ROD THREAD X LENGTH KM & KF	KD	KI	KA	B	BC	C	CS	D	E	NPT EE	F	G	J	K	KN	LB	OD	P	R	RR	RS	TR	WB	Y	ZB
8.000	1.375	1"-14 x 1.625	1 3/8"-12 x 1.625	1 1/4"-12 x 1.625	1 1/4"-12 x 2.500	1.999	3.267	.625	.312	1.125	8.500	3/4	.625	2.000	1.500	.750	.938	5.125	8.450	3.375	6.435	3.734	3.000	.625	1.625	2.750	7.625
	1.750	1 1/4"-12 x 2.000	1 3/4"-12 x 2.000	1 1/2"-12 x 2.000	1 1/2"-12 x 3.000	2.374	3.267	.750	.312	1.500												3.734	3.000		1.875	3.000	7.875
	2.000	1 1/2"-12 x 2.250	2"-12 x 2.250	1 3/4"-12 x 2.250	1 3/4"-12 x 3.500	2.624	3.812	.875	.312	1.688												4.312	3.750		2.000	3.125	8.000
	2.500	1 7/8"-12 x 3.000	2 1/2"-12 x 3.000	2 1/4"-12 x 3.000	2 1/4"-12 x 4.500	3.124	3.812	1.000	.312	2.062												4.312	3.750		2.250	3.375	8.250
	3.000	2 1/4"-12 x 3.500	3"-12 x 3.500	2 3/4"-12 x 3.500	2 3/4"-12 x 5.500	3.749	4.700	1.000	.375	2.625												5.562	4.500		2.250	3.375	8.250
	3.500	2 1/2"-12 x 3.500	3 1/2"-12 x 3.500	3 1/4"-12 x 3.500	3 1/4"-12 x 6.500	4.249	5.200	1.000	.375	3.000												6.062	5.000		2.250	3.375	8.250
	4.000	3"-12 x 4.000	4"-12 x 4.000	3 3/4"-12 x 4.000	3 3/4"-12 x 7.500	4.749	5.700	1.000	.375	3.375												6.562	5.500		2.250	3.375	8.250
	4.500	3 1/4"-12 x 4.500	4 1/2"-12 x 4.500	4 1/4"-12 x 4.500	4 1/4"-12 x 8.250	5.249	6.200	1.000	.375	3.875												7.062	6.000		2.250	3.375	8.250
	5.000	3 1/2"-12 x 5.000	5"-12 x 5.000	4 3/4"-12 x 5.000	4 3/4"-12 x 9.000	5.749	6.700	1.000	.375	4.250												7.562	6.500		2.250	3.375	8.250
	5.500	4"-12 x 5.500	5 1/2"-12 x 5.500	5 1/4"-12 x 5.500	5 1/4"-12 x 10.000	6.249	7.125	1.000	.375	4.625												7.938	7.000		2.250	3.375	8.250
10.000	1.750	1 1/4"-12 x 2.000	1 3/4"-12 x 2.000	1 1/2"-12 x 2.000	1 1/2"-12 x 3.000	2.374	3.812	.750	.312	1.500	10.625	1	.625	2.250	2.000	.875	1.062	6.375	10.450	4.250	7.920	4.312	3.750	.750	1.875	3.062	9.250
	2.000	1 1/2"-12 x 2.250	2"-12 x 2.250	1 3/4"-12 x 2.250	1 3/4"-12 x 3.500	2.624	3.812	.875	.312	1.688												4.312	3.750		2.000	3.187	9.375
	2.500	1 7/8"-12 x 3.000	2 1/2"-12 x 3.000	2 1/4"-12 x 3.000	2 1/4"-12 x 4.500	3.124	3.812	1.000	.312	2.062												4.312	3.750		2.250	3.437	9.625
	3.000	2 1/4"-12 x 3.500	3"-12 x 3.500	2 3/4"-12 x 3.500	2 3/4"-12 x 5.500	3.749	4.700	1.000	.375	2.625												5.562	4.500		2.250	3.437	9.625
	3.500	2 1/2"-12 x 3.500	3 1/2"-12 x 3.500	3 1/4"-12 x 3.500	3 1/4"-12 x 6.500	4.249	5.200	1.000	.375	3.000												6.062	5.000		2.250	3.437	9.625
	4.000	3"-12 x 4.000	4"-12 x 4.000	3 3/4"-12 x 4.000	3 3/4"-12 x 7.500	4.749	5.700	1.000	.375	3.375												6.562	5.500		2.250	3.437	9.625
	4.500	3 1/4"-12 x 4.500	4 1/2"-12 x 4.500	4 1/4"-12 x 4.500	4 1/4"-12 x 8.250	5.249	6.200	1.000	.375	3.875												7.062	6.000		2.250	3.437	9.625
	5.000	3 1/2"-12 x 5.000	5"-12 x 5.000	4 3/4"-12 x 5.000	4 3/4"-12 x 9.000	5.749	6.700	1.000	.375	4.250												7.562	6.500		2.250	3.437	9.625
	5.500	4"-12 x 5.500	5 1/2"-12 x 5.500	5 1/4"-12 x 5.500	5 1/4"-12 x 10.000	6.249	7.125	1.000	.375	4.625												7.938	7.000		2.250	3.437	9.625
12.000	2.000	1 1/2"-12 x 2.250	2"-12 x 2.250	1 3/4"-12 x 2.250	1 3/4"-12 x 3.500	2.624	3.812	.875	.312	1.688	12.750	1	.625	2.250	2.000	.875	1.062	6.875	12.450	4.750	9.405	4.312	3.750	.750	2.000	3.187	9.875
	2.500	1 7/8"-12 x 3.000	2 1/2"-12 x 3.000	2 1/4"-12 x 3.000	2 1/4"-12 x 4.500	3.124	3.812	1.000	.312	2.062												4.312	3.750		2.250	3.437	10.125
	3.000	2 1/4"-12 x 3.500	3"-12 x 3.500	2 3/4"-12 x 3.500	2 3/4"-12 x 5.500	3.749	4.700	1.000	.375	2.625												5.562	4.500		2.250	3.437	10.125
	3.500	2 1/2"-12 x 3.500	3 1/2"-12 x 3.500	3 1/4"-12 x 3.500	3 1/4"-12 x 6.500	4.249	5.200	1.000	.375	3.000												6.062	5.000		2.250	3.437	10.125
	4.000	3"-12 x 4.000	4"-12 x 4.000	3 3/4"-12 x 4.000	3 3/4"-12 x 7.500	4.749	5.700	1.000	.375	3.375												6.562	5.500		2.250	3.437	10.125
	4.500	3 1/4"-12 x 4.500	4 1/2"-12 x 4.500	4 1/4"-12 x 4.500	4 1/4"-12 x 8.250	5.249	6.200	1.000	.375	3.875												7.062	6.000		2.250	3.437	10.125
	5.000	3 1/2"-12 x 5.000	5"-12 x 5.000	4 3/4"-12 x 5.000	4 3/4"-12 x 9.000	5.749	6.700	1.000	.375	4.250												7.562	6.500		2.250	3.437	10.125
	5.500	4"-12 x 5.500	5 1/2"-12 x 5.500	5 1/4"-12 x 5.500	5 1/4"-12 x 10.000	6.249	7.125	1.000	.375	4.625												7.938	7.000		2.250	3.437	10.125
14.000	2.500	1 7/8"-12 x 3.000	2 1/2"-12 x 3.000	2 1/4"-12 x 3.000	2 1/4"-12 x 4.500	3.124	3.812		.312	2.062	14.750	1 1/4	.625	2.750	2.250	1.000	1.250	8.125	14.450	5.625	10.889	4.312	3.750	.875	2.250	3.688	11.500
	3.000	2 1/4"-12 x 3.500	3"-12 x 3.500	2 3/4"-12 x 3.500	2 3/4"-12 x 5.500	3.749	4.700		.375	2.625												5.562	4.500				
	3.500	2 1/2"-12 x 3.500	3 1/2"-12 x 3.500	3 1/4"-12 x 3.500	3 1/4"-12 x 6.500	4.249	5.200		.375	3.000												6.062	5.000				
	4.000	3"-12 x 4.000	4"-12 x 4.000	3 3/4"-12 x 4.000	3 3/4"-12 x 7.500	4.749	5.700	1.000	.375	3.375												6.562	5.500				
	4.500	3 1/4"-12 x 4.500	4 1/2"-12 x 4.500	4 1/4"-12 x 4.500	4 1/4"-12 x 8.250	5.249	6.200		.375	3.875												7.062	6.000				
	5.000	3 1/2"-12 x 5.000	5"-12 x 5.000	4 3/4"-12 x 5.000	4 3/4"-12 x 9.000	5.749	6.700		.375	4.250												7.562	6.500				
	5.500	4"-12 x 5.500	5 1/2"-12 x 5.500	5 1/4"-12 x 5.500	5 1/4"-12 x 10.000	6.249	7.125		.375	4.625												7.938	7.000				
BORE	MM	KM & KF	KD	KI	KA	B	BC	C	CS	D	E	EE	F	G	J	K	KN	LB	OD	P	R	RR	RS	TR	WB	Y	ZB

FILE: 1.00_MHOL2.dwg REV: 02/09/2010

27650 Groesbeck Hwy • Roseville, MI 48066-2759 • Phone 586.775.7211 • Fax 586.775.4545 • Toll Free 800.526.7968 • e-mail: sales@peninsularcylinders.com • www.peninsularcylinders.com

FOOT SIDE LUGS

Heavy Duty Steel Air Cylinder

Peninsular Mounting Style: **MH 1**

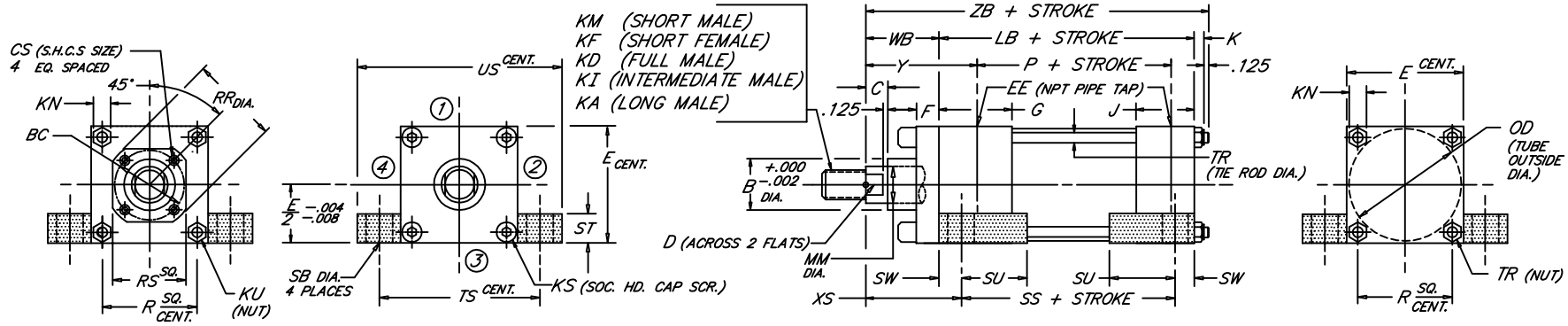

BORE	ROD MM	ROD THREAD X LENGTH KM & KF	KD	KI	KA	B	BC	C	CS	D	E	NPT EE	F	G	J	K	KN	KS	KU	LB	OD	P	R	RR	RS	SB	SS	ST	SU	SW	TR	TS	US	WB	XS	Y	ZB
1.500	.625	7/16"-20 x .750	5/8"-18 x .750	1/2"-20 x .750	1/2"-20 x 1.125	1.124	---	.375	---	.500	2.000	3/8	.375	1.500	1.000	.312	.438	.250	---	3.625	1.750	2.335	1.428	---	---	.438	2.875	.500	.938	.375	.250	2.750	3.500	1.000	1.375	1.875	5.062
	1.000	3/4"-16 x 1.125	1"-14 x 1.125	7/8"-14 x 1.125	7/8"-14 x 1.875	1.499		.500		.875																								1.375	1.750	2.250	5.437
2.000	.625	7/16"-20 x .750	5/8"-18 x .750	1/2"-20 x .750	1/2"-20 x 1.125	1.124	---	.375	---	.500	2.500	3/8	.375	1.500	1.000	.344	.500	.312	---	3.625	2.250	2.335	1.838	---	---	.438	2.875	.500	.938	.375	.312	3.250	4.000	1.000	1.375	1.875	5.094
	1.000	3/4"-16 x 1.125	1"-14 x 1.125	7/8"-14 x 1.125	7/8"-14 x 1.875	1.499		.500		.875																								1.375	1.750	2.250	5.469
	1.375	1"-14 x 1.625	1 3/8"-12 x 1.625	1 1/4"-12 x 1.625	1 1/4"-12 x 2.500	1.999		.625		1.125																								1.625	2.000	2.500	5.719
2.500	.625	7/16"-20 x .750	5/8"-18 x .750	1/2"-20 x .750	1/2"-20 x 1.125	1.124	---	.375	---	.500	3.000	3/8	.375	1.500	1.000	.344	.500	.312	---	3.750	2.750	2.460	2.192	---	---	.438	3.000	.500	.938	.375	.312	3.750	4.500	1.000	1.375	1.875	5.219
	1.000	3/4"-16 x 1.125	1"-14 x 1.125	7/8"-14 x 1.125	7/8"-14 x 1.875	1.499		.500		.875																								1.375	1.750	2.250	5.594
	1.375	1"-14 x 1.625	1 3/8"-12 x 1.625	1 1/4"-12 x 1.625	1 1/4"-12 x 2.500	1.999		.625		1.125																								1.625	2.000	2.500	5.844
	1.750	1 1/4"-12 x 2.000	1 3/4"-12 x 2.000	1 1/2"-12 x 2.000	1 1/2"-12 x 3.000	2.374		.750		1.500																								1.875	2.250	2.750	6.094
3.250	1.000	3/4"-16 x 1.125	1"-14 x 1.125	7/8"-14 x 1.125	7/8"-14 x 1.875	1.499	---	.500	---	.875	3.750	1/2	.625	1.750	1.250	.438	.562	.375	---	4.250	3.500	2.750	2.758	---	---	.562	3.250	.750	1.250	.500	.375	4.750	5.750	1.375	1.875	2.375	6.188
	1.375	1"-14 x 1.625	1 3/8"-12 x 1.625	1 1/4"-12 x 1.625	1 1/4"-12 x 2.500	1.999		.625		1.125																								1.625	2.125	2.625	6.438
	1.750	1 1/4"-12 x 2.000	1 3/4"-12 x 2.000	1 1/2"-12 x 2.000	1 1/2"-12 x 3.000	2.374		.750		1.500																								1.875	2.375	2.875	6.688
	2.000	1 1/2"-12 x 2.250	2"-12 x 2.250	1 3/4"-12 x 2.250	1 3/4"-12 x 3.500	2.624		.875		1.688																								2.000	2.500	3.000	6.813
4.000	1.000	3/4"-16 x 1.125	1"-14 x 1.125	7/8"-14 x 1.125	7/8"-14 x 1.875	1.499	2.562	.500	.250	.875	4.500	1/2	.625	1.750	1.250	.438	.562	---	.375	4.250	4.250	2.750	3.323	2.969	2.500	.562	3.250	.750	1.250	.500	.375	5.500	6.500	1.375	1.875	2.375	6.188
	1.375	1"-14 x 1.625	1 3/8"-12 x 1.625	1 1/4"-12 x 1.625	1 1/4"-12 x 2.500	1.999	2.562	.625	.250	1.125								---	.375					2.969	2.500									1.625	2.125	2.625	6.438
	1.750	1 1/4"-12 x 2.000	1 3/4"-12 x 2.000	1 1/2"-12 x 2.000	1 1/2"-12 x 3.000	2.374	3.267	.750	.312	1.500								---	.375					3.734	3.000									1.875	2.375	2.875	6.688
	2.000	1 1/2"-12 x 2.250	2"-12 x 2.250	1 3/4"-12 x 2.250	1 3/4"-12 x 3.500	2.624	---	.875	---	1.688								.375	---					---	---									2.000	2.500	3.000	6.813
	2.500	1 7/8"-12 x 3.000	2 1/2"-12 x 3.000	2 1/4"-12 x 3.000	2 1/4"-12 x 4.500	3.124	---	1.000	---	2.062								.375	---					---	---									2.250	2.750	3.250	7.063
5.000	1.000	3/4"-16 x 1.125	1"-14 x 1.125	7/8"-14 x 1.125	7/8"-14 x 1.875	1.499	2.562	.500	.250	.875	5.500	1/2	.625	1.750	1.250	.594	.750	---	.500	4.500	5.250	3.000	4.101	2.969	2.500	.812	3.125	1.000	1.562	.6875	.500	6.875	8.250	1.375	2.062	2.375	6.594
	1.375	1"-14 x 1.625	1 3/8"-12 x 1.625	1 1/4"-12 x 1.625	1 1/4"-12 x 2.500	1.999	2.562	.625	.250	1.125								---	.500					2.969	2.500									1.625	2.312	2.625	6.844
	1.750	1 1/4"-12 x 2.000	1 3/4"-12 x 2.000	1 1/2"-12 x 2.000	1 1/2"-12 x 3.000	2.374	3.267	.750	.312	1.500								---	.500					3.734	3.000									1.875	2.562	2.875	7.094
	2.000	1 1/2"-12 x 2.250	2"-12 x 2.250	1 3/4"-12 x 2.250	1 3/4"-12 x 3.500	2.624	3.812	.875	.312	1.688								---	.500					4.312	3.750									2.000	2.688	3.000	7.219
	2.500	1 7/8"-12 x 3.000	2 1/2"-12 x 3.000	2 1/4"-12 x 3.000	2 1/4"-12 x 4.500	3.124	3.812	1.000	.312	2.062								---	.500					4.312	3.750									2.250	2.938	3.250	7.469
	3.000	2 1/4"-12 x 3.500	3"-12 x 3.500	2 3/4"-12 x 3.500	2 3/4"-12 x 5.500	3.749	---	1.000	---	2.625								.500	---					---	---									2.250	2.938	3.250	7.469
	3.500	2 1/2"-12 x 3.500	3 1/2"-12 x 3.500	3 1/4"-12 x 3.500	3 1/4"-12 x 6.500	4.249	---	1.000	---	3.000								.500	---					---	---									2.250	2.938	3.250	7.469
6.000	1.375	1"-14 x 1.625	1 3/8"-12 x 1.625	1 1/4"-12 x 1.625	1 1/4"-12 x 2.500	1.999	3.267	.625	.312	1.125	6.500	3/4	.625	2.000	1.500	.594	.750	---	.500	5.000	6.250	3.250	4.879	3.734	3.000	.812	3.625	1.000	1.562	.6875	.500	7.875	9.250	1.625	2.312	2.750	7.344
	1.750	1 1/4"-12 x 2.000	1 3/4"-12 x 2.000	1 1/2"-12 x 2.000	1 1/2"-12 x 3.000	2.374	3.267	.750	.312	1.500			.625					---	.500					3.734	3.000									1.875	2.562	3.000	7.594
	2.000	1 1/2"-12 x 2.250	2"-12 x 2.250	1 3/4"-12 x 2.250	1 3/4"-12 x 3.500	2.624	3.812	.875	.312	1.688			.625					---	.500					4.312	3.750									2.000	2.688	3.125	7.719
	2.500	1 7/8"-12 x 3.000	2 1/2"-12 x 3.000	2 1/4"-12 x 3.000	2 1/4"-12 x 4.500	3.124	3.812	1.000	.312	2.062			.625					---	.500					4.312	3.750									2.250	2.938	3.375	7.969
	3.000	2 1/4"-12 x 3.500	3"-12 x 3.500	2 3/4"-12 x 3.500	2 3/4"-12 x 5.500	3.749	4.700	1.000	.375	2.625			.625					---	.500					5.562	4.500									2.250	2.938	3.375	7.969
	3.500	2 1/2"-12 x 3.500	3 1/2"-12 x 3.500	3 1/4"-12 x 3.500	3 1/4"-12 x 6.500	4.249	5.200	1.000	.375	3.000			.625					---	.500					6.062	5.000									2.250	2.938	3.375	7.969
	4.000	3"-12 x 4.000	4"-12 x 4.000	3 3/4"-12 x 4.000	3 3/4"-12 x 7.500	4.749	---	1.000	---	3.375			.750					.500	---					---	---									2.250	2.938	3.375	7.969

1.01

FILE: 1.01_MH1S2.dwg REV: 02/09/2010

27650 Groesbeck Hwy • Roseville, MI 48066-2759 • Phone 586.775.7211 • Fax 586.775.4545 • Toll Free 800.526.7968 • e-mail: sales@peninsularcylinders.com • www.peninsularcylinders.com

FOOT SIDE LUGS

Heavy Duty Steel Air Cylinder

Peninsular Mounting Style: **MH 1**

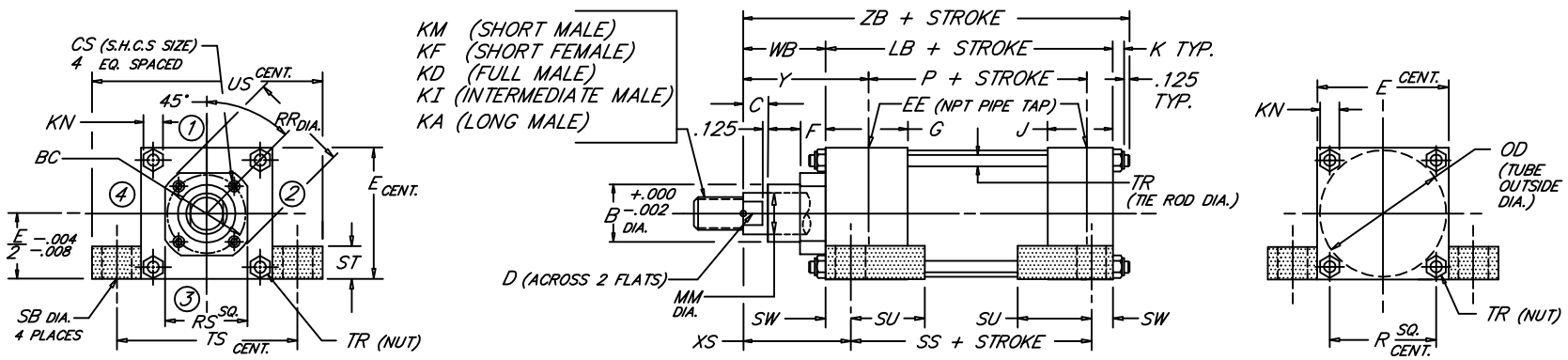

BORE	MM	ROD THREAD X LENGTH KM & KF	KD	KI	KA	B	BC	C	CS	D	E	NPT EE	F	G	J	K	KN	LB	OD	P	R	RR	RS	SB	SS	ST	SU	SW	TR	TS	US	WB	XS	Y	ZB
8.000	1.375	1"-14 x 1.625	1 3/8"-12 x 1.625	1 1/4"-12 x 1.625	1 1/4"-12 x 2.500	1.999	3.267	.625	.312	1.125	8.500	3/4	.625	2.000	1.500	.750	.938	5.125	8.450	3.375	6.435	3.734	3.000	.812	3.750	1.000	1.562	.6875	.625	9.875	11.250	1.625	2.313	2.750	7.625
	1.750	1 1/4"-12 x 2.000	1 3/4"-12 x 2.000	1 1/2"-12 x 2.000	1 1/2"-12 x 3.000	2.374	3.267	.750	.312	1.500												3.734	3.000									1.875	2.562	3.000	7.875
	2.000	1 1/2"-12 x 2.250	2"-12 x 2.250	1 3/4"-12 x 2.250	1 3/4"-12 x 3.500	2.624	3.812	.875	.312	1.688												4.312	3.750									2.000	2.688	3.125	8.000
	2.500	1 7/8"-12 x 3.000	2 1/2"-12 x 3.000	2 1/4"-12 x 3.000	2 1/4"-12 x 4.500	3.124	3.812	1.000	.312	2.062												4.312	3.750									2.250	2.938	3.375	8.250
	3.000	2 1/4"-12 x 3.500	3"-12 x 3.500	2 3/4"-12 x 3.500	2 3/4"-12 x 5.500	3.749	4.700	1.000	.375	2.625												5.562	4.500									2.250	2.938	3.375	8.250
	3.500	2 1/2"-12 x 3.500	3 1/2"-12 x 3.500	3 1/4"-12 x 3.500	3 1/4"-12 x 6.500	4.249	5.200	1.000	.375	3.000												6.062	5.000									2.250	2.938	3.375	8.250
	4.000	3"-12 x 4.000	4"-12 x 4.000	3 3/4"-12 x 4.000	3 3/4"-12 x 7.500	4.749	5.700	1.000	.375	3.375												6.562	5.500									2.250	2.938	3.375	8.250
	4.500	3 1/4"-12 x 4.500	4 1/2"-12 x 4.500	4 1/4"-12 x 4.500	4 1/4"-12 x 8.250	5.249	6.200	1.000	.375	3.875												7.062	6.000									2.250	2.938	3.375	8.250
	5.000	3 1/2"-12 x 5.000	5"-12 x 5.000	4 3/4"-12 x 5.000	4 3/4"-12 x 9.000	5.749	6.700	1.000	.375	4.250												7.562	6.500									2.250	2.938	3.375	8.250
	5.500	4"-12 x 5.500	5 1/2"-12 x 5.500	5 1/4"-12 x 5.500	5 1/4"-12 x 10.000	6.249	7.125	1.000	.375	4.625												7.938	7.000									2.250	2.938	3.375	8.250
10.000	1.750	1 1/4"-12 x 2.000	1 3/4"-12 x 2.000	1 1/2"-12 x 2.000	1 1/2"-12 x 3.000	2.374	3.812	.750	.312	1.500	10.625	1	.625	2.250	2.000	.875	1.062	6.375	10.450	4.250	7.920	4.312	3.750	1.062	4.625	1.250	2.000	.875	.750	12.375	14.125	1.875	2.750	3.062	9.250
	2.000	1 1/2"-12 x 2.250	2"-12 x 2.250	1 3/4"-12 x 2.250	1 3/4"-12 x 3.500	2.624	3.812	.875	.312	1.688												4.312	3.750									2.000	2.875	3.187	9.375
	2.500	1 7/8"-12 x 3.000	2 1/2"-12 x 3.000	2 1/4"-12 x 3.000	2 1/4"-12 x 4.500	3.124	3.812	1.000	.312	2.062												4.312	3.750									2.250	3.125	3.437	9.625
	3.000	2 1/4"-12 x 3.500	3"-12 x 3.500	2 3/4"-12 x 3.500	2 3/4"-12 x 5.500	3.749	4.700	1.000	.375	2.625												5.562	4.500									2.250	3.125	3.437	9.625
	3.500	2 1/2"-12 x 3.500	3 1/2"-12 x 3.500	3 1/4"-12 x 3.500	3 1/4"-12 x 6.500	4.249	5.200	1.000	.375	3.000												6.062	5.000									2.250	3.125	3.437	9.625
	4.000	3"-12 x 4.000	4"-12 x 4.000	3 3/4"-12 x 4.000	3 3/4"-12 x 7.500	4.749	5.700	1.000	.375	3.375												6.562	5.500									2.250	3.125	3.437	9.625
	4.500	3 1/4"-12 x 4.500	4 1/2"-12 x 4.500	4 1/4"-12 x 4.500	4 1/4"-12 x 8.250	5.249	6.200	1.000	.375	3.875												7.062	6.000									2.250	3.125	3.437	9.625
	5.000	3 1/2"-12 x 5.000	5"-12 x 5.000	4 3/4"-12 x 5.000	4 3/4"-12 x 9.000	5.749	6.700	1.000	.375	4.250												7.562	6.500									2.250	3.125	3.437	9.625
	5.500	4"-12 x 5.500	5 1/2"-12 x 5.500	5 1/4"-12 x 5.500	5 1/4"-12 x 10.000	6.249	7.125	1.000	.375	4.625												7.938	7.000									2.250	3.125	3.437	9.625
12.000	2.000	1 1/2"-12 x 2.250	2"-12 x 2.250	1 3/4"-12 x 2.250	1 3/4"-12 x 3.500	2.624	3.812	.875	.312	1.688	12.750	1	.625	2.250	2.000	.875	1.062	6.875	12.450	4.750	9.405	4.312	3.750	1.062	5.125	1.250	2.000	.875	.750	14.500	16.250	2.000	2.875	3.187	9.875
	2.500	1 7/8"-12 x 3.000	2 1/2"-12 x 3.000	2 1/4"-12 x 3.000	2 1/4"-12 x 4.500	3.124	3.812	1.000	.312	2.062												4.312	3.750									2.250	3.125	3.437	10.125
	3.000	2 1/4"-12 x 3.500	3"-12 x 3.500	2 3/4"-12 x 3.500	2 3/4"-12 x 5.500	3.749	4.700	1.000	.375	2.625												5.562	4.500									2.250	3.125	3.437	10.125
	3.500	2 1/2"-12 x 3.500	3 1/2"-12 x 3.500	3 1/4"-12 x 3.500	3 1/4"-12 x 6.500	4.249	5.200	1.000	.375	3.000												6.062	5.000									2.250	3.125	3.437	10.125
	4.000	3"-12 x 4.000	4"-12 x 4.000	3 3/4"-12 x 4.000	3 3/4"-12 x 7.500	4.749	5.700	1.000	.375	3.375												6.562	5.500									2.250	3.125	3.437	10.125
	4.500	3 1/4"-12 x 4.500	4 1/2"-12 x 4.500	4 1/4"-12 x 4.500	4 1/4"-12 x 8.250	5.249	6.200	1.000	.375	3.875												7.062	6.000									2.250	3.125	3.437	10.125
	5.000	3 1/2"-12 x 5.000	5"-12 x 5.000	4 3/4"-12 x 5.000	4 3/4"-12 x 9.000	5.749	6.700	1.000	.375	4.250												7.562	6.500									2.250	3.125	3.437	10.125
	5.500	4"-12 x 5.500	5 1/2"-12 x 5.500	5 1/4"-12 x 5.500	5 1/4"-12 x 10.000	6.249	7.125	1.000	.375	4.625												7.938	7.000									2.250	3.125	3.437	10.125
14.000	2.500	1 7/8"-12 x 3.000	2 1/2"-12 x 3.000	2 1/4"-12 x 3.000	2 1/4"-12 x 4.500	3.124	3.812		.312	2.062	14.750	1 1/4	.625	2.750	2.250	1.000	1.250	8.125	14.450	5.625	10.889	4.312	3.750	1.312	5.875	1.500	2.500	1.125	.875	17.000	19.250	2.250	3.375	3.688	11.500
	3.000	2 1/4"-12 x 3.500	3"-12 x 3.500	2 3/4"-12 x 3.500	2 3/4"-12 x 5.500	3.749	4.700		.375	2.625												5.562	4.500												
	3.500	2 1/2"-12 x 3.500	3 1/2"-12 x 3.500	3 1/4"-12 x 3.500	3 1/4"-12 x 6.500	4.249	5.200		.375	3.000												6.062	5.000												
	4.000	3"-12 x 4.000	4"-12 x 4.000	3 3/4"-12 x 4.000	3 3/4"-12 x 7.500	4.749	5.700	1.000	.375	3.375												6.562	5.500												
	4.500	3 1/4"-12 x 4.500	4 1/2"-12 x 4.500	4 1/4"-12 x 4.500	4 1/4"-12 x 8.250	5.249	6.200		.375	3.875												7.062	6.000												
	5.000	3 1/2"-12 x 5.000	5"-12 x 5.000	4 3/4"-12 x 5.000	4 3/4"-12 x 9.000	5.749	6.700		.375	4.250												7.562	6.500												
	5.500	4"-12 x 5.500	5 1/2"-12 x 5.500	5 1/4"-12 x 5.500	5 1/4"-12 x 10.000	6.249	7.125		.375	4.625												7.938	7.000												
BORE	MM	KM & KF	KD	KI	KA	B	BC	C	CS	D	E	EE	F	G	J	K	KN	LB	OD	P	R	RR	RS	SB	SS	ST	SU	SW	TR	TS	US	WB	XS	Y	ZB

FILE: 1.01_MH1L2.dwg REV: 02/09/1020

27650 Groesbeck Hwy • Roseville, MI 48066-2759 • Phone 586.775.7211 • Fax 586.775.4545 • Toll Free 800.526.7968 • e-mail: sales@peninsularcylinders.com • www.peninsularcylinders.com

HEAD TRUNNION

Heavy Duty Steel Air Cylinder

Peninsular Mounting Style: **MH 2**

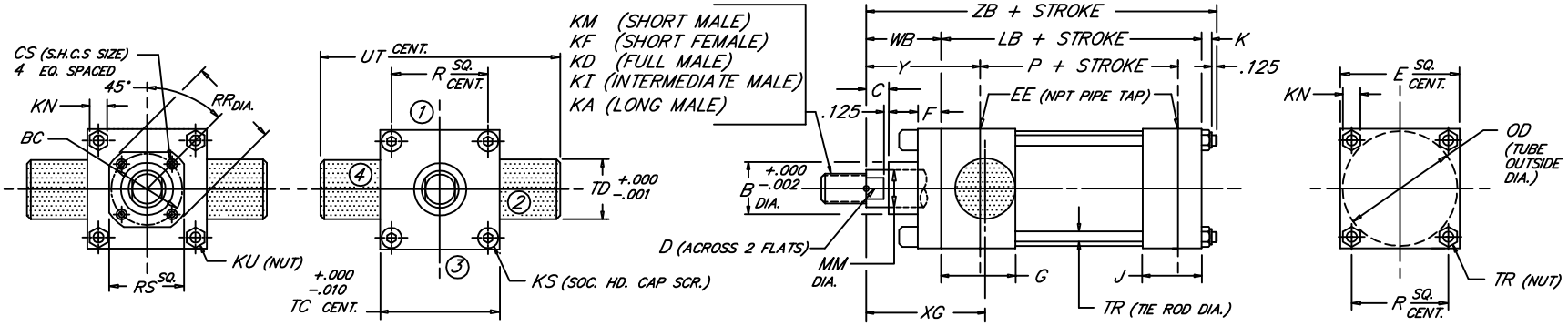

BORE	ROD MM	ROD THREAD X LENGTH KM & KF	KD	KI	KA	B	BC	C	CS	D	E	NPT EE	F	G	J	K	KN	KS	KU	LB	OD	P	R	RR	RS	TC	TD	TR	UT	WB	XG	Y	ZB
1.500	.625	7/16"-20 x .750	5/8"-18 x .750	1/2"-20 x .750	1/2"-20 x 1.125	1.124	---	.375	---	.500	2.000	3/8	.375	1.500	1.000	.312	.438	.250	---	3.625	1.750	2.335	1.428	---	---	2.000	1.000	.250	4.000	1.000	1.750	1.875	5.062
	1.000	3/4"-16 x 1.125	1"-14 x 1.125	7/8"-14 x 1.125	7/8"-14 x 1.875	1.499		.500		.875																				1.375	2.125	2.250	5.437
2.000	.625	7/16"-20 x .750	5/8"-18 x .750	1/2"-20 x .750	1/2"-20 x 1.125	1.124	---	.375	---	.500	2.500	3/8	.375	1.500	1.000	.344	.500	.312	---	3.625	2.250	2.335	1.838	---	---	2.500	1.000	.312	4.500	1.000	1.750	1.875	5.094
	1.000	3/4"-16 x 1.125	1"-14 x 1.125	7/8"-14 x 1.125	7/8"-14 x 1.875	1.499		.500		.875																				1.375	2.125	2.250	5.469
	1.375	1"-14 x 1.625	1 3/8"-12 x 1.625	1 1/4"-12 x 1.625	1 1/4"-12 x 2.500	1.999		.625		1.125																				1.625	2.375	2.500	5.719
2.500	.625	7/16"-20 x .750	5/8"-18 x .750	1/2"-20 x .750	1/2"-20 x 1.125	1.124	---	.375	---	.500	3.000	3/8	.375	1.500	1.000	.344	.500	.312	---	3.750	2.750	2.460	2.192	---	---	3.000	1.000	.312	5.000	1.000	1.750	1.875	5.219
	1.000	3/4"-16 x 1.125	1"-14 x 1.125	7/8"-14 x 1.125	7/8"-14 x 1.875	1.499		.500		.875																				1.375	2.125	2.250	5.594
	1.375	1"-14 x 1.625	1 3/8"-12 x 1.625	1 1/4"-12 x 1.625	1 1/4"-12 x 2.500	1.999		.625		1.125																				1.625	2.375	2.500	5.844
	1.750	1 1/4"-12 x 2.000	1 3/4"-12 x 2.000	1 1/2"-12 x 2.000	1 1/2"-12 x 3.000	2.374		.750		1.500																				1.875	2.625	2.750	6.094
3.250	1.000	3/4"-16 x 1.125	1"-14 x 1.125	7/8"-14 x 1.125	7/8"-14 x 1.875	1.499	---	.500	---	.875	3.750	1/2	.625	1.750	1.250	.438	.562	.375	---	4.250	3.500	2.750	2.758	---	---	3.750	1.000	.375	5.750	1.375	2.250	2.375	6.188
	1.375	1"-14 x 1.625	1 3/8"-12 x 1.625	1 1/4"-12 x 1.625	1 1/4"-12 x 2.500	1.999		.625		1.125																				1.625	2.500	2.625	6.438
	1.750	1 1/4"-12 x 2.000	1 3/4"-12 x 2.000	1 1/2"-12 x 2.000	1 1/2"-12 x 3.000	2.374		.750		1.500																				1.875	2.750	2.875	6.688
	2.000	1 1/2"-12 x 2.250	2"-12 x 2.250	1 3/4"-12 x 2.250	1 3/4"-12 x 3.500	2.624		.875		1.688																				2.000	2.875	3.000	6.813
4.000	1.000	3/4"-16 x 1.125	1"-14 x 1.125	7/8"-14 x 1.125	7/8"-14 x 1.875	1.499	2.562	.500	.250	.875	4.500	1/2	.625	1.750	1.250	.438	.562	---	.375	4.250	4.250	2.750	3.323	2.969	2.500	4.500	1.000	.375	6.500	1.375	2.250	2.375	6.188
	1.375	1"-14 x 1.625	1 3/8"-12 x 1.625	1 1/4"-12 x 1.625	1 1/4"-12 x 2.500	1.999	2.562	.625	.250	1.125								---	.375					2.969	2.500					1.625	2.500	2.625	6.438
	1.750	1 1/4"-12 x 2.000	1 3/4"-12 x 2.000	1 1/2"-12 x 2.000	1 1/2"-12 x 3.000	2.374	3.267	.750	.312	1.500								---	.375					3.734	3.000					1.875	2.750	2.875	6.688
	2.000	1 1/2"-12 x 2.250	2"-12 x 2.250	1 3/4"-12 x 2.250	1 3/4"-12 x 3.500	2.624	---	.875	---	1.688								.375	---					---	---					2.000	2.875	3.000	6.813
	2.500	1 7/8"-12 x 3.000	2 1/2"-12 x 3.000	2 1/4"-12 x 3.000	2 1/4"-12 x 4.500	3.124	---	1.000	---	2.062								.375	---					---	---					2.250	3.125	3.250	7.063
5.000	1.000	3/4"-16 x 1.125	1"-14 x 1.125	7/8"-14 x 1.125	7/8"-14 x 1.875	1.499	2.562	.500	.250	.875	5.500	1/2	.625	1.750	1.250	.594	.750	---	.500	4.500	5.250	3.000	4.101	2.969	2.500	5.500	1.000	.500	7.500	1.375	2.250	2.375	6.594
	1.375	1"-14 x 1.625	1 3/8"-12 x 1.625	1 1/4"-12 x 1.625	1 1/4"-12 x 2.500	1.999	2.562	.625	.250	1.125								---	.500					2.969	2.500					1.625	2.500	2.625	6.844
	1.750	1 1/4"-12 x 2.000	1 3/4"-12 x 2.000	1 1/2"-12 x 2.000	1 1/2"-12 x 3.000	2.374	3.267	.750	.312	1.500								---	.500					3.734	3.000					1.875	2.750	2.875	7.094
	2.000	1 1/2"-12 x 2.250	2"-12 x 2.250	1 3/4"-12 x 2.250	1 3/4"-12 x 3.500	2.624	3.812	.875	.312	1.688								---	.500					4.312	3.750					2.000	2.875	3.000	7.219
	2.500	1 7/8"-12 x 3.000	2 1/2"-12 x 3.000	2 1/4"-12 x 3.000	2 1/4"-12 x 4.500	3.124	3.812	1.000	.312	2.062								---	.500					4.312	3.750					2.250	3.125	3.250	7.469
	3.000	2 1/4"-12 x 3.500	3"-12 x 3.500	2 3/4"-12 x 3.500	2 3/4"-12 x 5.500	3.749	---	1.000	---	2.625								.500	---					---	---					2.250	3.125	3.250	7.469
	3.500	2 1/2"-12 x 3.500	3 1/2"-12 x 3.500	3 1/4"-12 x 3.500	3 1/4"-12 x 6.500	4.249	---	1.000	---	3.000								.500	---					---	---					2.250	3.125	3.250	7.469
6.000	1.375	1"-14 x 1.625	1 3/8"-12 x 1.625	1 1/4"-12 x 1.625	1 1/4"-12 x 2.500	1.999	3.267	.625	.312	1.125	6.500	3/4	.625	2.000	1.500	.594	.750	---	.500	5.000	6.250	3.250	4.879	3.734	3.000	6.500	1.375	.500	9.250	1.625	2.625	2.750	7.344
	1.750	1 1/4"-12 x 2.000	1 3/4"-12 x 2.000	1 1/2"-12 x 2.000	1 1/2"-12 x 3.000	2.374	3.267	.750	.312	1.500			.625					---	.500					3.734	3.000					1.875	2.875	3.000	7.594
	2.000	1 1/2"-12 x 2.250	2"-12 x 2.250	1 3/4"-12 x 2.250	1 3/4"-12 x 3.500	2.624	3.812	.875	.312	1.688			.625					---	.500					4.312	3.750					2.000	3.000	3.125	7.719
	2.500	1 7/8"-12 x 3.000	2 1/2"-12 x 3.000	2 1/4"-12 x 3.000	2 1/4"-12 x 4.500	3.124	3.812	1.000	.312	2.062			.625					---	.500					4.312	3.750					2.250	3.250	3.375	7.969
	3.000	2 1/4"-12 x 3.500	3"-12 x 3.500	2 3/4"-12 x 3.500	2 3/4"-12 x 5.500	3.749	4.700	1.000	.375	2.625			.625					---	.500					5.562	4.500					2.250	3.250	3.375	7.969
	3.500	2 1/2"-12 x 3.500	3 1/2"-12 x 3.500	3 1/4"-12 x 3.500	3 1/4"-12 x 6.500	4.249	5.200	1.000	.375	3.000			.625					---	.500					6.062	5.000					2.250	3.250	3.375	7.969
	4.000	3"-12 x 4.000	4"-12 x 4.000	3 3/4"-12 x 4.000	3 3/4"-12 x 7.500	4.749	---	1.000	---	3.375			.750					.500	---					---	---					2.250	3.250	3.375	7.969
BORE	MM	KM & KF	KD	KI	KA	B	BC	C	CS	D	E	EE	F	G	J	K	KN	KS	KU	LB	OD	P	R	RR	RS	TC	TD	TR	UT	WB	XG	Y	ZB

1.02

FILE: 1.02_MH2S2.dwg REV: 02/09/2010

27650 Groesbeck Hwy • Roseville, MI 48066-2759 • Phone 586.775.7211 • Fax 586.775.4545 • Toll Free 800.526.7968 • e-mail: sales@peninsularcylinders.com • www.peninsularcylinders.com

HEAD TRUNNION

Heavy Duty Steel Air Cylinder

Peninsular Mounting Style: **MH 2**

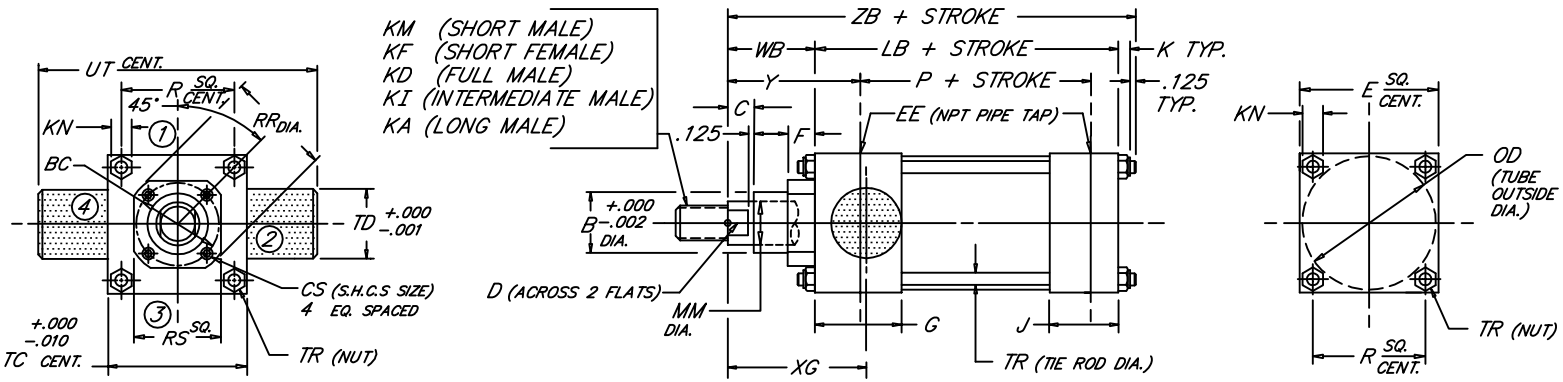

BORE	MM	ROD THREAD X LENGTH KM & KF	KD	KI	KA	B	BC	C	CS	D	E	NPT EE	F	G	J	K	KN	LB	OD	P	R	RR	RS	TC	TD	TR	UT	WB	XG	Y	ZB
8.000	1.375	1"-14 x 1.625	1 3/8"-12 x 1.625	1 1/4"-12 x 1.625	1 1/4"-12 x 2.500	1.999	3.267	.625	.312	1.125	8.500	3/4	.625	2.000	1.500	.750	.938	5.125	8.450	3.375	6.435	3.734	3.000	8.500	1.375	.625	11.250	1.625	2.625	2.750	7.625
	1.750	1 1/4"-12 x 2.000	1 3/4"-12 x 2.000	1 1/2"-12 x 2.000	1 1/2"-12 x 3.000	2.374	3.267	.750	.312	1.500												3.734	3.000					1.875	2.875	3.000	7.875
	2.000	1 1/2"-12 x 2.250	2"-12 x 2.250	1 3/4"-12 x 2.250	1 3/4"-12 x 3.500	2.624	3.812	.875	.312	1.688												4.312	3.750					2.000	3.000	3.125	8.000
	2.500	1 7/8"-12 x 3.000	2 1/2"-12 x 3.000	2 1/4"-12 x 3.000	2 1/4"-12 x 4.500	3.124	3.812	1.000	.312	2.062												4.312	3.750					2.250	3.250	3.375	8.250
	3.000	2 1/4"-12 x 3.500	3"-12 x 3.500	2 3/4"-12 x 3.500	2 3/4"-12 x 5.500	3.749	4.700	1.000	.375	2.625												5.562	4.500					2.250	3.250	3.375	8.250
	3.500	2 1/2"-12 x 3.500	3 1/2"-12 x 3.500	3 1/4"-12 x 3.500	3 1/4"-12 x 6.500	4.249	5.200	1.000	.375	3.000												6.062	5.000					2.250	3.250	3.375	8.250
	4.000	3"-12 x 4.000	4"-12 x 4.000	3 3/4"-12 x 4.000	3 3/4"-12 x 7.500	4.749	5.700	1.000	.375	3.375												6.562	5.500					2.250	3.250	3.375	8.250
	4.500	3 1/4"-12 x 4.500	4 1/2"-12 x 4.500	4 1/4"-12 x 4.500	4 1/4"-12 x 8.250	5.249	6.200	1.000	.375	3.875												7.062	6.000					2.250	3.250	3.375	8.250
	5.000	3 1/2"-12 x 5.000	5"-12 x 5.000	4 3/4"-12 x 5.000	4 3/4"-12 x 9.000	5.749	6.700	1.000	.375	4.250												7.562	6.500					2.250	3.250	3.375	8.250
	5.500	4"-12 x 5.500	5 1/2"-12 x 5.500	5 1/4"-12 x 5.500	5 1/4"-12 x 10.000	6.249	7.125	1.000	.375	4.625												7.938	7.000					2.250	3.250	3.375	8.250
10.000	1.750	1 1/4"-12 x 2.000	1 3/4"-12 x 2.000	1 1/2"-12 x 2.000	1 1/2"-12 x 3.000	2.374	3.812	.750	.312	1.500	10.625	1	.625	2.250	2.000	.875	1.062	6.375	10.450	4.250	7.920	4.312	3.750	10.625	1.750	.750	14.125	1.875	3.000	3.062	9.250
	2.000	1 1/2"-12 x 2.250	2"-12 x 2.250	1 3/4"-12 x 2.250	1 3/4"-12 x 3.500	2.624	3.812	.875	.312	1.688												4.312	3.750					2.000	3.125	3.187	9.375
	2.500	1 7/8"-12 x 3.000	2 1/2"-12 x 3.000	2 1/4"-12 x 3.000	2 1/4"-12 x 4.500	3.124	3.812	1.000	.312	2.062												4.312	3.750					2.250	3.375	3.437	9.625
	3.000	2 1/4"-12 x 3.500	3"-12 x 3.500	2 3/4"-12 x 3.500	2 3/4"-12 x 5.500	3.749	4.700	1.000	.375	2.625												5.562	4.500					2.250	3.375	3.437	9.625
	3.500	2 1/2"-12 x 3.500	3 1/2"-12 x 3.500	3 1/4"-12 x 3.500	3 1/4"-12 x 6.500	4.249	5.200	1.000	.375	3.000												6.062	5.000					2.250	3.375	3.437	9.625
	4.000	3"-12 x 4.000	4"-12 x 4.000	3 3/4"-12 x 4.000	3 3/4"-12 x 7.500	4.749	5.700	1.000	.375	3.375												6.562	5.500					2.250	3.375	3.437	9.625
	4.500	3 1/4"-12 x 4.500	4 1/2"-12 x 4.500	4 1/4"-12 x 4.500	4 1/4"-12 x 8.250	5.249	6.200	1.000	.375	3.875												7.062	6.000					2.250	3.375	3.437	9.625
	5.000	3 1/2"-12 x 5.000	5"-12 x 5.000	4 3/4"-12 x 5.000	4 3/4"-12 x 9.000	5.749	6.700	1.000	.375	4.250												7.562	6.500					2.250	3.375	3.437	9.625
	5.500	4"-12 x 5.500	5 1/2"-12 x 5.500	5 1/4"-12 x 5.500	5 1/4"-12 x 10.000	6.249	7.125	1.000	.375	4.625												7.938	7.000					2.250	3.375	3.437	9.625
12.000	2.000	1 1/2"-12 x 2.250	2"-12 x 2.250	1 3/4"-12 x 2.250	1 3/4"-12 x 3.500	2.624	3.812	.875	.312	1.688	12.750	1	.625	2.250	2.000	.875	1.062	6.875	12.450	4.750	9.405	4.312	3.750	12.750	1.750	.750	16.250	2.000	3.125	3.187	9.875
	2.500	1 7/8"-12 x 3.000	2 1/2"-12 x 3.000	2 1/4"-12 x 3.000	2 1/4"-12 x 4.500	3.124	3.812	1.000	.312	2.062												4.312	3.750					2.250	3.375	3.437	10.125
	3.000	2 1/4"-12 x 3.500	3"-12 x 3.500	2 3/4"-12 x 3.500	2 3/4"-12 x 5.500	3.749	4.700	1.000	.375	2.625												5.562	4.500					2.250	3.375	3.437	10.125
	3.500	2 1/2"-12 x 3.500	3 1/2"-12 x 3.500	3 1/4"-12 x 3.500	3 1/4"-12 x 6.500	4.249	5.200	1.000	.375	3.000												6.062	5.000					2.250	3.375	3.437	10.125
	4.000	3"-12 x 4.000	4"-12 x 4.000	3 3/4"-12 x 4.000	3 3/4"-12 x 7.500	4.749	5.700	1.000	.375	3.375												6.562	5.500					2.250	3.375	3.437	10.125
	4.500	3 1/4"-12 x 4.500	4 1/2"-12 x 4.500	4 1/4"-12 x 4.500	4 1/4"-12 x 8.250	5.249	6.200	1.000	.375	3.875												7.062	6.000					2.250	3.375	3.437	10.125
	5.000	3 1/2"-12 x 5.000	5"-12 x 5.000	4 3/4"-12 x 5.000	4 3/4"-12 x 9.000	5.749	6.700	1.000	.375	4.250												7.562	6.500					2.250	3.375	3.437	10.125
	5.500	4"-12 x 5.500	5 1/2"-12 x 5.500	5 1/4"-12 x 5.500	5 1/4"-12 x 10.000	6.249	7.125	1.000	.375	4.625												7.938	7.000					2.250	3.375	3.437	10.125
14.000	2.500	1 7/8"-12 x 3.000	2 1/2"-12 x 3.000	2 1/4"-12 x 3.000	2 1/4"-12 x 4.500	3.124	3.812		.312	2.062	14.750	1 1/4	.625	2.750	2.250	1.000	1.250	8.125	14.450	5.625	10.889	4.312	3.750	14.750	2.000	.875	18.750	2.250	3.625	3.688	11.500
	3.000	2 1/4"-12 x 3.500	3"-12 x 3.500	2 3/4"-12 x 3.500	2 3/4"-12 x 5.500	3.749	4.700		.375	2.625												5.562	4.500								
	3.500	2 1/2"-12 x 3.500	3 1/2"-12 x 3.500	3 1/4"-12 x 3.500	3 1/4"-12 x 6.500	4.249	5.200		.375	3.000												6.062	5.000								
	4.000	3"-12 x 4.000	4"-12 x 4.000	3 3/4"-12 x 4.000	3 3/4"-12 x 7.500	4.749	5.700		.375	3.375												6.562	5.500								
	4.500	3 1/4"-12 x 4.500	4 1/2"-12 x 4.500	4 1/4"-12 x 4.500	4 1/4"-12 x 8.250	5.249	6.200		.375	3.875												7.062	6.000								
	5.000	3 1/2"-12 x 5.000	5"-12 x 5.000	4 3/4"-12 x 5.000	4 3/4"-12 x 9.000	5.749	6.700		.375	4.250												7.562	6.500								
	5.500	4"-12 x 5.500	5 1/2"-12 x 5.500	5 1/4"-12 x 5.500	5 1/4"-12 x 10.000	6.249	7.125		.375	4.625												7.938	7.000								
BORE	MM	KM & KF	KD	KI	KA	B	BC	C	CS	D	E	EE	F	G	J	K	KN	LB	OD	P	R	RR	RS	TC	TD	TR	UT	WB	XG	Y	ZB

FILE: 1.02_MH2L2.dwg REV: 02/09/2010

27650 Groesbeck Hwy • Roseville, MI 48066-2759 • Phone 586.775.7211 • Fax 586.775.4545 • Toll Free 800.526.7968 • e-mail: sales@peninsularcylinders.com • www.peninsularcylinders.com

CAP FIXED CLEVIS

Heavy Duty Steel Air Cylinder

Peninsular Mounting Style: **MH 3**

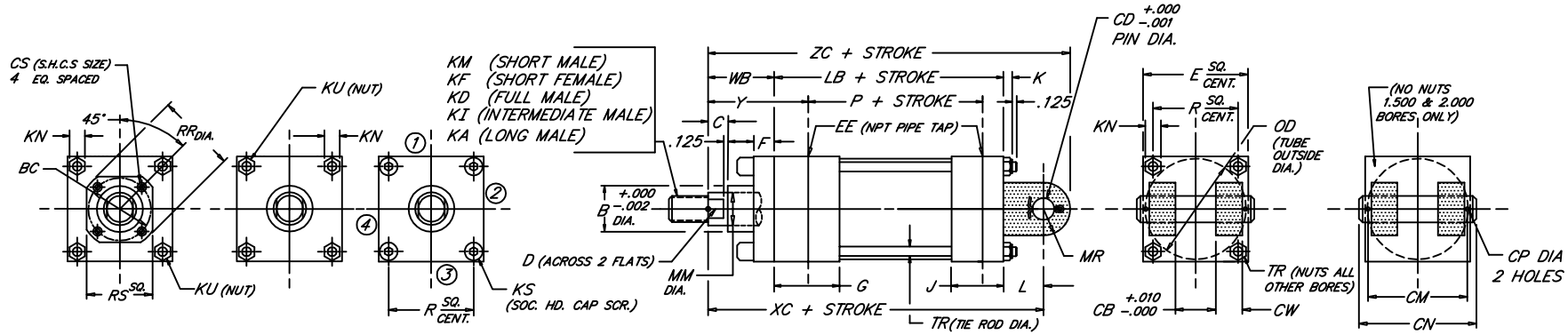

BORE	ROD MM	ROD THREAD X LENGTH KM & KF	KD	KI	KA	B	BC	C	CB	CD	CM	CN	CP	CS	CW	D	E	NPT EE	F	G	J	K	KN	KS	KU	L	LB	MR	OD	P	R	RR	RS	TR	WB	XC	Y	ZC
1.500	.625	7/16"-20 x .750	5/8"-18 x .750	1/2"-20 x .750	1/2"-20 x 1.125	1.124	---	.375	.765	.500	1.938	2.281	.106	---	.500	.500	2.000	3/8	.375	1.500	1.000	.312	.438	---	.250	.750	3.625	.500	1.750	2.335	1.428	---	---	.250	1.000	5.375	1.875	5.875
	1.000	3/4"-16 x 1.125	1"-14 x 1.125	7/8"-14 x 1.125	7/8"-14 x 1.875	1.499		.500								.875																			1.375	5.750	2.250	6.250
2.000	.625	7/16"-20 x .750	5/8"-18 x .750	1/2"-20 x .750	1/2"-20 x 1.125	1.124	---	.375	.765	.500	1.938	2.281	.106	---	.500	.500	2.500	3/8	.375	1.500	1.000	.344	.500	---	.312	.750	3.625	.500	2.250	2.335	1.838	---	---	.312	1.000	5.375	1.875	5.875
	1.000	3/4"-16 x 1.125	1"-14 x 1.125	7/8"-14 x 1.125	7/8"-14 x 1.875	1.499		.500								.875																			1.375	5.750	2.250	6.250
	1.375	1"-14 x 1.625	1 3/8"-12 x 1.625	1 1/4"-12 x 1.625	1 1/4"-12 x 2.500	1.999		.625								1.125																			1.625	6.000	2.500	6.500
2.500	.625	7/16"-20 x .750	5/8"-18 x .750	1/2"-20 x .750	1/2"-20 x 1.125	1.124	---	.375	.765	.500	1.938	2.281	.106	---	.500	.500	3.000	3/8	.375	1.500	1.000	.344	.500	.312	---	.750	3.750	.500	2.750	2.460	2.192	---	---	.312	1.000	5.500	1.875	6.000
	1.000	3/4"-16 x 1.125	1"-14 x 1.125	7/8"-14 x 1.125	7/8"-14 x 1.875	1.499		.500								.875																			1.375	5.875	2.250	6.375
	1.375	1"-14 x 1.625	1 3/8"-12 x 1.625	1 1/4"-12 x 1.625	1 1/4"-12 x 2.500	1.999		.625								1.125																			1.625	6.125	2.500	6.625
	1.750	1 1/4"-12 x 2.000	1 3/4"-12 x 2.000	1 1/2"-12 x 2.000	1 1/2"-12 x 3.000	2.374		.750								1.500																			1.875	6.375	2.750	6.875
3.250	1.000	3/4"-16 x 1.125	1"-14 x 1.125	7/8"-14 x 1.125	7/8"-14 x 1.875	1.499		.500	1.265	.750	2.719	3.094	.140	---	.625	.875	3.750	1/2	.625	1.750	1.250	.438	.562	.375	---	1.250	4.250	.750	3.500	2.750	2.758	---	---	.375	1.375	6.875	2.375	7.625
	1.375	1"-14 x 1.625	1 3/8"-12 x 1.625	1 1/4"-12 x 1.625	1 1/4"-12 x 2.500	1.999		.625								1.125																			1.625	7.125	2.625	7.875
	1.750	1 1/4"-12 x 2.000	1 3/4"-12 x 2.000	1 1/2"-12 x 2.000	1 1/2"-12 x 3.000	2.374		.750								1.500																			1.875	7.375	2.875	8.125
	2.000	1 1/2"-12 x 2.250	2"-12 x 2.250	1 3/4"-12 x 2.250	1 3/4"-12 x 3.500	2.624		.875								1.688																			2.000	7.500	3.000	8.250
4.000	1.000	3/4"-16 x 1.125	1"-14 x 1.125	7/8"-14 x 1.125	7/8"-14 x 1.875	1.499	2.562	.500	1.265	.750	2.719	3.094	.140	.250	.625	.875	4.500	1/2	.625	1.750	1.250	.438	.562	---	.375	1.250	4.250	.750	4.250	2.750	3.323	2.969	2.500	.375	1.375	6.875	2.375	7.625
	1.375	1"-14 x 1.625	1 3/8"-12 x 1.625	1 1/4"-12 x 1.625	1 1/4"-12 x 2.500	1.999	2.562	.625						.250		1.125								---	.375							2.969	2.500		1.625	7.125	2.625	7.875
	1.750	1 1/4"-12 x 2.000	1 3/4"-12 x 2.000	1 1/2"-12 x 2.000	1 1/2"-12 x 3.000	2.374	3.267	.750						.312		1.500								---	.375							3.734	3.000		1.875	7.375	2.875	8.125
	2.000	1 1/2"-12 x 2.250	2"-12 x 2.250	1 3/4"-12 x 2.250	1 3/4"-12 x 3.500	2.624	---	.875						---		1.688								.375	---							---	---		2.000	7.500	3.000	8.250
	2.500	1 7/8"-12 x 3.000	2 1/2"-12 x 3.000	2 1/4"-12 x 3.000	2 1/4"-12 x 4.500	3.124	---	1.000						---		2.062								.375	---							---	---		2.250	7.750	3.250	8.500
5.000	1.000	3/4"-16 x 1.125	1"-14 x 1.125	7/8"-14 x 1.125	7/8"-14 x 1.875	1.499	2.562	.500	1.265	.750	2.719	3.094	.140	.250	.625	.875	5.500	1/2	.625	1.750	1.250	.594	.750	---	.500	1.250	4.500	.750	5.250	3.000	4.101	2.969	2.500	.500	1.375	7.125	2.375	7.875
	1.375	1"-14 x 1.625	1 3/8"-12 x 1.625	1 1/4"-12 x 1.625	1 1/4"-12 x 2.500	1.999	2.562	.625						.250		1.125								---	.500							2.969	2.500		1.625	7.375	2.625	8.125
	1.750	1 1/4"-12 x 2.000	1 3/4"-12 x 2.000	1 1/2"-12 x 2.000	1 1/2"-12 x 3.000	2.374	3.267	.750						.312		1.500								---	.500							3.734	3.000		1.875	7.625	2.875	8.375
	2.000	1 1/2"-12 x 2.250	2"-12 x 2.250	1 3/4"-12 x 2.250	1 3/4"-12 x 3.500	2.624	3.812	.875						.312		1.688								---	.500							4.312	3.750		2.000	7.750	3.000	8.500
	2.500	1 7/8"-12 x 3.000	2 1/2"-12 x 3.000	2 1/4"-12 x 3.000	2 1/4"-12 x 4.500	3.124	3.812	1.000						.312		2.062								---	.500							4.312	3.750		2.250	8.000	3.250	8.750
	3.000	2 1/4"-12 x 3.500	3"-12 x 3.500	2 3/4"-12 x 3.500	2 3/4"-12 x 5.500	3.749	---	1.000						---		2.625								.500	---							---	---		2.250	8.000	3.250	8.750
	3.500	2 1/2"-12 x 3.500	3 1/2"-12 x 3.500	3 1/4"-12 x 3.500	3 1/4"-12 x 6.500	4.249	---	1.000						---		3.000								.500	---							---	---		2.250	8.000	3.250	8.750
6.000	1.375	1"-14 x 1.625	1 3/8"-12 x 1.625	1 1/4"-12 x 1.625	1 1/4"-12 x 2.500	1.999	3.267	.625	1.515	1.000	3.219	3.594	.140	.312	.750	1.125	6.500	3/4	.625	2.000	1.500	.594	.750	---	.500	1.500	5.000	1.000	6.250	3.250	4.879	3.734	3.000	.500	1.625	8.125	2.750	9.125
	1.750	1 1/4"-12 x 2.000	1 3/4"-12 x 2.000	1 1/2"-12 x 2.000	1 1/2"-12 x 3.000	2.374	3.267	.750						.312		1.500			.625					---	.500							3.734	3.000		1.875	8.375	3.000	9.375
	2.000	1 1/2"-12 x 2.250	2"-12 x 2.250	1 3/4"-12 x 2.250	1 3/4"-12 x 3.500	2.624	3.812	.875						.312		1.688			.625					---	.500							4.312	3.750		2.000	8.500	3.125	9.500
	2.500	1 7/8"-12 x 3.000	2 1/2"-12 x 3.000	2 1/4"-12 x 3.000	2 1/4"-12 x 4.500	3.124	3.812	1.000						.312		2.062			.625					---	.500							4.312	3.750		2.250	8.750	3.375	9.750
	3.000	2 1/4"-12 x 3.500	3"-12 x 3.500	2 3/4"-12 x 3.500	2 3/4"-12 x 5.500	3.749	4.700	1.000						.375		2.625			.625					---	.500							5.562	4.500		2.250	8.750	3.375	9.750
	3.500	2 1/2"-12 x 3.500	3 1/2"-12 x 3.500	3 1/4"-12 x 3.500	3 1/4"-12 x 6.500	4.249	5.200	1.000						.375		3.000			.625					---	.500							6.062	5.000		2.250	8.750	3.375	9.750
	4.000	3"-12 x 4.000	4"-12 x 4.000	3 3/4"-12 x 4.000	3 3/4"-12 x 7.500	4.749	---	1.000						---		3.375			.750					.500	---							---	---		2.250	8.750	3.375	9.750

FILE: 1.03_MH3S2.dwg REV: 02/09/2010

27650 Groesbeck Hwy • Roseville, MI 48066-2759 • Phone 586.775.7211 • Fax 586.775.4545 • Toll Free 800.526.7968 • e-mail: sales@peninsularcylinders.com • www.peninsularcylinders.com

CAP FIXED CLEVIS

Heavy Duty Steel Air Cylinder

Peninsular Mounting Style: **MH 3**

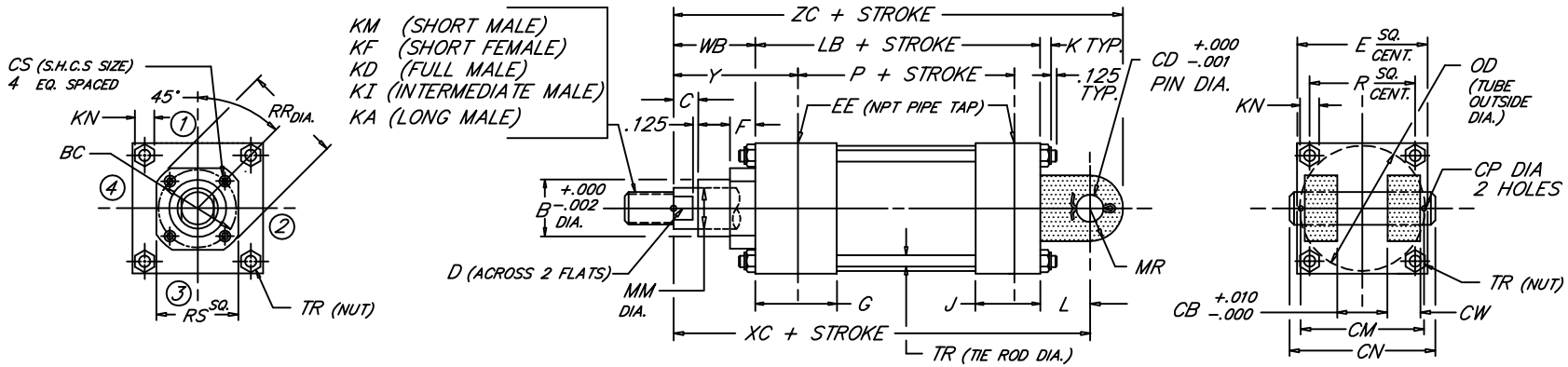

BORE	ROD MM	ROD THREAD X LENGTH KM & KF	KD	KI	KA	B	BC	C	CB	CD	CM	CN	CP	CS	CW	D	E	NPT EE	F	G	J	K	KN	L	LB	MR	OD	P	R	RR	RS	TR	WB	XC	Y	ZC
8.000	1.375	1"-14 x 1.625	1 3/8"-12 x 1.625	1 1/4"-12 x 1.625	1 1/4"-12 x 2.500	1.999	3.267	.625						.312		1.125													3.734	3.000		1.625	8.250	2.750	9.250
	1.750	1 1/4"-12 x 2.000	1 3/4"-12 x 2.000	1 1/2"-12 x 2.000	1 1/2"-12 x 3.000	2.374	3.267	.750						.312		1.500													3.734	3.000		1.875	8.500	3.000	9.500
	2.000	1 1/2"-12 x 2.250	2"-12 x 2.250	1 3/4"-12 x 2.250	1 3/4"-12 x 3.500	2.624	3.812	.875						.312		1.688													4.312	3.750		2.000	8.625	3.125	9.625
	2.500	1 7/8"-12 x 3.000	2 1/2"-12 x 3.000	2 1/4"-12 x 3.000	2 1/4"-12 x 4.500	3.124	3.812	1.000						.312		2.062													4.312	3.750		2.250	8.875	3.375	9.875
	3.000	2 1/4"-12 x 3.500	3"-12 x 3.500	2 3/4"-12 x 3.500	2 3/4"-12 x 5.500	3.749	4.700	1.000						.375		2.625													5.562	4.500		2.250	8.875	3.375	9.875
	3.500	2 1/2"-12 x 3.500	3 1/2"-12 x 3.500	3 1/4"-12 x 3.500	3 1/4"-12 x 6.500	4.249	5.200	1.000	1.515	1.000	3.219	3.594	.140	.375	.750	3.000	8.500	3/4	.625	2.000	1.500	.750	.938	1.500	5.125	1.000	8.450	3.375	6.435	6.062	5.000	.625	2.250	8.875	3.375	9.875
	4.000	3"-12 x 4.000	4"-12 x 4.000	3 3/4"-12 x 4.000	3 3/4"-12 x 7.500	4.749	5.700	1.000						.375		3.375													6.562	5.500		2.250	8.875	3.375	9.875
	4.500	3 1/4"-12 x 4.500	4 1/2"-12 x 4.500	4 1/4"-12 x 4.500	4 1/4"-12 x 8.250	5.249	6.200	1.000						.375		3.875													7.062	6.000		2.250	8.875	3.375	9.875
	5.000	3 1/2"-12 x 5.000	5"-12 x 5.000	4 3/4"-12 x 5.000	4 3/4"-12 x 9.000	5.749	6.700	1.000						.375		4.250													7.562	6.500		2.250	8.875	3.375	9.875
	5.500	4"-12 x 5.500	5 1/2"-12 x 5.500	5 1/4"-12 x 5.500	5 1/4"-12 x 10.000	6.249	7.125	1.000						.375		4.625													7.938	7.000		2.250	8.875	3.375	9.875
10.000	1.750	1 1/4"-12 x 2.000	1 3/4"-12 x 2.000	1 1/2"-12 x 2.000	1 1/2"-12 x 3.000	2.374	3.812	.750						.312		1.500													4.312	3.750		1.875	10.375	3.062	11.750
	2.000	1 1/2"-12 x 2.250	2"-12 x 2.250	1 3/4"-12 x 2.250	1 3/4"-12 x 3.500	2.624	3.812	.875						.312		1.688													4.312	3.750		2.000	10.500	3.187	11.875
	2.500	1 7/8"-12 x 3.000	2 1/2"-12 x 3.000	2 1/4"-12 x 3.000	2 1/4"-12 x 4.500	3.124	3.812	1.000						.312		2.062													4.312	3.750		2.250	10.750	3.437	12.125
	3.000	2 1/4"-12 x 3.500	3"-12 x 3.500	2 3/4"-12 x 3.500	2 3/4"-12 x 5.500	3.749	4.700	1.000						.375		2.625													5.562	4.500		2.250	10.750	3.437	12.125
	3.500	2 1/2"-12 x 3.500	3 1/2"-12 x 3.500	3 1/4"-12 x 3.500	3 1/4"-12 x 6.500	4.249	5.200	1.000	2.015	1.375	4.250	4.656	.173	.375	1.000	3.000	10.625	1	.625	2.250	2.000	.875	1.062	2.125	6.375	1.375	10.450	4.250	7.920	6.062	5.000	.750	2.250	10.750	3.437	12.125
	4.000	3"-12 x 4.000	4"-12 x 4.000	3 3/4"-12 x 4.000	3 3/4"-12 x 7.500	4.749	5.700	1.000						.375		3.375													6.562	5.500		2.250	10.750	3.437	12.125
	4.500	3 1/4"-12 x 4.500	4 1/2"-12 x 4.500	4 1/4"-12 x 4.500	4 1/4"-12 x 8.250	5.249	6.200	1.000						.375		3.875													7.062	6.000		2.250	10.750	3.437	12.125
	5.000	3 1/2"-12 x 5.000	5"-12 x 5.000	4 3/4"-12 x 5.000	4 3/4"-12 x 9.000	5.749	6.700	1.000						.375		4.250													7.562	6.500		2.250	10.750	3.437	12.125
	5.500	4"-12 x 5.500	5 1/2"-12 x 5.500	5 1/4"-12 x 5.500	5 1/4"-12 x 10.000	6.249	7.125	1.000						.375		4.625													7.938	7.000		2.250	10.750	3.437	12.125
12.000	2.000	1 1/2"-12 x 2.250	2"-12 x 2.250	1 3/4"-12 x 2.250	1 3/4"-12 x 3.500	2.624	3.812	.875						.312		1.688													4.312	3.750		2.000	11.125	3.187	12.875
	2.500	1 7/8"-12 x 3.000	2 1/2"-12 x 3.000	2 1/4"-12 x 3.000	2 1/4"-12 x 4.500	3.124	3.812	1.000						.312		2.062													4.312	3.750		2.250	11.375	3.437	13.125
	3.000	2 1/4"-12 x 3.500	3"-12 x 3.500	2 3/4"-12 x 3.500	2 3/4"-12 x 5.500	3.749	4.700	1.000						.375		2.625													5.562	4.500		2.250	11.375	3.437	13.125
	3.500	2 1/2"-12 x 3.500	3 1/2"-12 x 3.500	3 1/4"-12 x 3.500	3 1/4"-12 x 6.500	4.249	5.200	1.000	2.515	1.750	5.250	5.656	.173	.375	1.250	3.000	12.750	1	.625	2.250	2.000	.875	1.062	2.250	6.875	1.750	12.450	4.750	9.405	6.062	5.000	.750	2.250	11.375	3.437	13.125
	4.000	3"-12 x 4.000	4"-12 x 4.000	3 3/4"-12 x 4.000	3 3/4"-12 x 7.500	4.749	5.700	1.000						.375		3.375													6.562	5.500		2.250	11.375	3.437	13.125
	4.500	3 1/4"-12 x 4.500	4 1/2"-12 x 4.500	4 1/4"-12 x 4.500	4 1/4"-12 x 8.250	5.249	6.200	1.000						.375		3.875													7.062	6.000		2.250	11.375	3.437	13.125
	5.000	3 1/2"-12 x 5.000	5"-12 x 5.000	4 3/4"-12 x 5.000	4 3/4"-12 x 9.000	5.749	6.700	1.000						.375		4.250													7.562	6.500		2.250	11.375	3.437	13.125
	5.500	4"-12 x 5.500	5 1/2"-12 x 5.500	5 1/4"-12 x 5.500	5 1/4"-12 x 10.000	6.249	7.125	1.000						.375		4.625													7.938	7.000		2.250	11.375	3.437	13.125
14.000	2.500	1 7/8"-12 x 3.000	2 1/2"-12 x 3.000	2 1/4"-12 x 3.000	2 1/4"-12 x 4.500	3.124	3.812							.312		2.062													4.312	3.750					
	3.000	2 1/4"-12 x 3.500	3"-12 x 3.500	2 3/4"-12 x 3.500	2 3/4"-12 x 5.500	3.749	4.700							.375		2.625													5.562	4.500					
	3.500	2 1/2"-12 x 3.500	3 1/2"-12 x 3.500	3 1/4"-12 x 3.500	3 1/4"-12 x 6.500	4.249	5.200							.375		3.000													6.062	5.000					
	4.000	3"-12 x 4.000	4"-12 x 4.000	3 3/4"-12 x 4.000	3 3/4"-12 x 7.500	4.749	5.700	1.000	2.515	2.000	5.281	5.719	.204	.375	1.250	3.375	14.750	1 1/4	.625	2.750	2.250	1.000	1.250	2.500	8.125	2.000	14.450	5.625	10.889	6.562	5.500	.875	2.250	12.875	3.688	14.875
	4.500	3 1/4"-12 x 4.500	4 1/2"-12 x 4.500	4 1/4"-12 x 4.500	4 1/4"-12 x 8.250	5.249	6.200							.375		3.875													7.062	6.000					
	5.000	3 1/2"-12 x 5.000	5"-12 x 5.000	4 3/4"-12 x 5.000	4 3/4"-12 x 9.000	5.749	6.700							.375		4.250													7.562	6.500					
	5.500	4"-12 x 5.500	5 1/2"-12 x 5.500	5 1/4"-12 x 5.500	5 1/4"-12 x 10.000	6.249	7.125							.375		4.625													7.938	7.000					
BORE	MM	KM & KF	KD	KI	KA	B	BC	C	CB	CD	CM	CN	CP	CS	CW	D	E	EE	F	G	J	K	KN	L	LB	MR	OD	P	R	RR	RS	TR	WB	XC	Y	ZC

FILE: 1.03_MH3L2.dwg REV: 02/09/2010

27650 Groesbeck Hwy • Roseville, MI 48066-2759 • Phone 586.775.7211 • Fax 586.775.4545 • Toll Free 800.526.7968 • e-mail: sales@peninsularcylinders.com • www.peninsularcylinders.com

HEAD RECTANGULAR FLANGE

Peninsular Mounting Style: **MH 4**

Heavy Duty Steel Air Cylinder

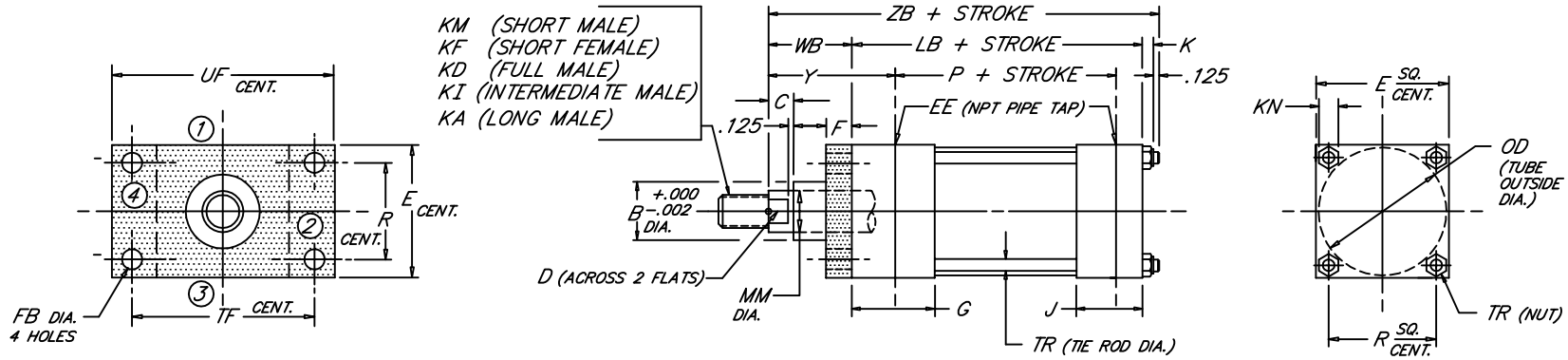

BORE	ROD MM	ROD THREAD X LENGTH KM & KF	KD	KI	KA	B	C	D	E	NPT EE	F	FB	G	J	K	KN	LB	OD	P	R	TF	TR	UF	WB	Y	ZB
1.500	.625	7/16"-20 x .750	5/8"-18 x .750	1/2"-20 x .750	1/2"-20 x 1.125	1.124	.375	.500	2.000	3/8	.375	.312	1.500	1.000	.312	.438	3.625	1.750	2.335	1.428	2.750	.250	3.375	1.000	1.875	5.062
	1.000	3/4"-16 x 1.125	1"-14 x 1.125	7/8"-14 x 1.125	7/8"-14 x 1.875	1.499	.500	.875																1.375	2.250	5.437
2.000	.625	7/16"-20 x .750	5/8"-18 x .750	1/2"-20 x .750	1/2"-20 x 1.125	1.124	.375	.500	2.500	3/8	.375	.375	1.500	1.000	.344	.500	3.625	2.250	2.335	1.838	3.375	.312	4.125	1.000	1.875	5.094
	1.000	3/4"-16 x 1.125	1"-14 x 1.125	7/8"-14 x 1.125	7/8"-14 x 1.875	1.499	.500	.875																1.375	2.250	5.469
	1.375	1"-14 x 1.625	1 3/8"-12 x 1.625	1 1/4"-12 x 1.625	1 1/4"-12 x 2.500	1.999	.625	1.125																1.625	2.500	5.719
2.500	.625	7/16"-20 x .750	5/8"-18 x .750	1/2"-20 x .750	1/2"-20 x 1.125	1.124	.375	.500	3.000	3/8	.375	.375	1.500	1.000	.344	.500	3.750	2.750	2.460	2.192	3.875	.312	4.625	1.000	1.875	5.219
	1.000	3/4"-16 x 1.125	1"-14 x 1.125	7/8"-14 x 1.125	7/8"-14 x 1.875	1.499	.500	.875																1.375	2.250	5.594
	1.375	1"-14 x 1.625	1 3/8"-12 x 1.625	1 1/4"-12 x 1.625	1 1/4"-12 x 2.500	1.999	.625	1.125																1.625	2.500	5.844
	1.750	1 1/4"-12 x 2.000	1 3/4"-12 x 2.000	1 1/2"-12 x 2.000	1 1/2"-12 x 3.000	2.374	.750	1.500																1.875	2.750	6.094
3.250	1.000	3/4"-16 x 1.125	1"-14 x 1.125	7/8"-14 x 1.125	7/8"-14 x 1.875	1.499	.500	.875	3.750	1/2	.625	.438	1.750	1.250	.438	.562	4.250	3.500	2.750	2.758	4.688	.375	5.500	1.375	2.375	6.188
	1.375	1"-14 x 1.625	1 3/8"-12 x 1.625	1 1/4"-12 x 1.625	1 1/4"-12 x 2.500	1.999	.625	1.125																1.625	2.625	6.438
	1.750	1 1/4"-12 x 2.000	1 3/4"-12 x 2.000	1 1/2"-12 x 2.000	1 1/2"-12 x 3.000	2.374	.750	1.500																1.875	2.875	6.688
	2.000	1 1/2"-12 x 2.250	2"-12 x 2.250	1 3/4"-12 x 2.250	1 3/4"-12 x 3.500	2.624	.875	1.688																2.000	3.000	6.813
4.000	1.000	3/4"-16 x 1.125	1"-14 x 1.125	7/8"-14 x 1.125	7/8"-14 x 1.875	1.499	.500	.875	4.500	1/2	.625	.438	1.750	1.250	.438	.562	4.250	4.250	2.750	3.323	5.438	.375	6.250	1.375	2.375	6.188
	1.375	1"-14 x 1.625	1 3/8"-12 x 1.625	1 1/4"-12 x 1.625	1 1/4"-12 x 2.500	1.999	.625	1.125																1.625	2.625	6.438
	1.750	1 1/4"-12 x 2.000	1 3/4"-12 x 2.000	1 1/2"-12 x 2.000	1 1/2"-12 x 3.000	2.374	.750	1.500																1.875	2.875	6.688
	2.000	1 1/2"-12 x 2.250	2"-12 x 2.250	1 3/4"-12 x 2.250	1 3/4"-12 x 3.500	2.624	.875	1.688																2.000	3.000	6.813
	2.500	1 7/8"-12 x 3.000	2 1/2"-12 x 3.000	2 1/4"-12 x 3.000	2 1/4"-12 x 4.500	3.124	1.000	2.062																2.250	3.250	7.063
5.000	1.000	3/4"-16 x 1.125	1"-14 x 1.125	7/8"-14 x 1.125	7/8"-14 x 1.875	1.499	.500	.875	5.500	1/2	.625	.562	1.750	1.250	.594	.750	4.500	5.250	3.000	4.101	6.625	.500	7.625	1.375	2.375	6.594
	1.375	1"-14 x 1.625	1 3/8"-12 x 1.625	1 1/4"-12 x 1.625	1 1/4"-12 x 2.500	1.999	.625	1.125																1.625	2.625	6.844
	1.750	1 1/4"-12 x 2.000	1 3/4"-12 x 2.000	1 1/2"-12 x 2.000	1 1/2"-12 x 3.000	2.374	.750	1.500																1.875	2.875	7.094
	2.000	1 1/2"-12 x 2.250	2"-12 x 2.250	1 3/4"-12 x 2.250	1 3/4"-12 x 3.500	2.624	.875	1.688																2.000	3.000	7.219
	2.500	1 7/8"-12 x 3.000	2 1/2"-12 x 3.000	2 1/4"-12 x 3.000	2 1/4"-12 x 4.500	3.124	1.000	2.062																2.250	3.250	7.469
	3.000	2 1/4"-12 x 3.500	3"-12 x 3.500	2 3/4"-12 x 3.500	2 3/4"-12 x 5.500	3.749	1.000	2.625																2.250	3.250	7.469
	3.500	2 1/2"-12 x 3.500	3 1/2"-12 x 3.500	3 1/4"-12 x 3.500	3 1/4"-12 x 6.500	4.249	1.000	3.000																2.250	3.250	7.469
6.000	1.375	1"-14 x 1.625	1 3/8"-12 x 1.625	1 1/4"-12 x 1.625	1 1/4"-12 x 2.500	1.999	.625	1.125	6.500	3/4	.750	.562	2.000	1.500	.594	.750	5.000	6.250	3.250	4.879	7.625	.500	8.625	1.625	2.750	7.344
	1.750	1 1/4"-12 x 2.000	1 3/4"-12 x 2.000	1 1/2"-12 x 2.000	1 1/2"-12 x 3.000	2.374	.750	1.500																1.875	3.000	7.594
	2.000	1 1/2"-12 x 2.250	2"-12 x 2.250	1 3/4"-12 x 2.250	1 3/4"-12 x 3.500	2.624	.875	1.688																2.000	3.125	7.719
	2.500	1 7/8"-12 x 3.000	2 1/2"-12 x 3.000	2 1/4"-12 x 3.000	2 1/4"-12 x 4.500	3.124	1.000	2.062																2.250	3.375	7.969
	3.000	2 1/4"-12 x 3.500	3"-12 x 3.500	2 3/4"-12 x 3.500	2 3/4"-12 x 5.500	3.749	1.000	2.625																2.250	3.375	7.969
	3.500	2 1/2"-12 x 3.500	3 1/2"-12 x 3.500	3 1/4"-12 x 3.500	3 1/4"-12 x 6.500	4.249	1.000	3.000																2.250	3.375	7.969
	4.000	3"-12 x 4.000	4"-12 x 4.000	3 3/4"-12 x 4.000	3 3/4"-12 x 7.500	4.749	1.000	3.375																2.250	3.375	7.969
BORE	MM	KM & KF	KD	KI	KA	B	C	D	E	EE	F	FB	G	J	K	KN	LB	OD	P	R	TF	TR	UF	WB	Y	ZB

FILE: 1.04_MH4S2.dwg REV: 02/09/2010

27650 Groesbeck Hwy • Roseville, MI 48066-2759 • Phone 586.775.7211 • Fax 586.775.4545 • Toll Free 800.526.7968 • e-mail: sales@peninsularcylinders.com • www.peninsularcylinders.com

HEAD RECTANGULAR FLANGE

Peninsular Mounting Style: **MH 4**

Heavy Duty Steel Air Cylinder

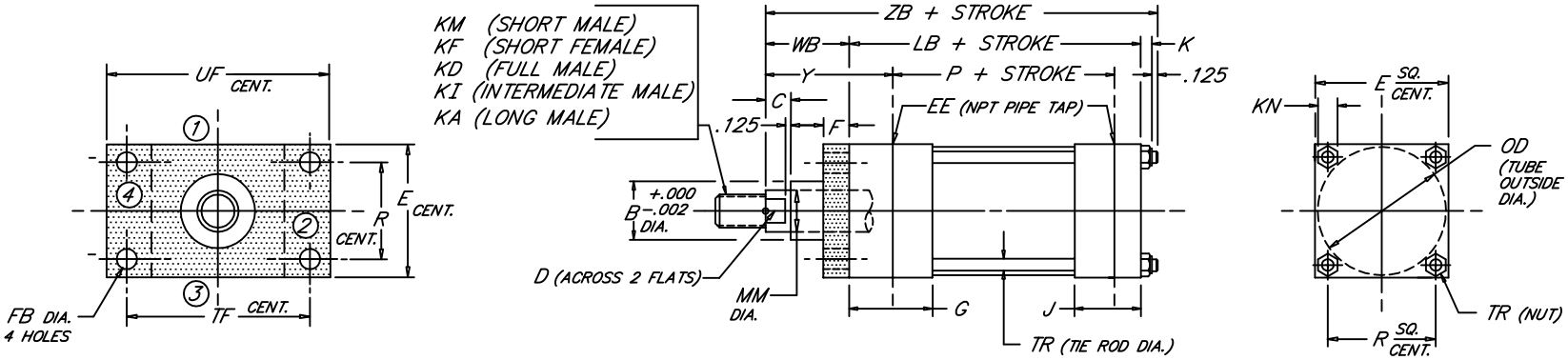

BORE	ROD MM	ROD THREAD X LENGTH KM & KF	KD	KI	KA	B	C	D	E	NPT EE	F	FB	G	J	K	KN	LB	OD	P	R	TF	TR	UF	WB	Y	ZB
1.500	.625	7/16"-20 x .750	5/8"-18 x .750	1/2"-20 x .750	1/2"-20 x 1.125	1.124	.375	.500	2.000	3/8	.375	.312	1.500	1.000	.312	.438	3.625	1.750	2.335	1.428	2.750	.250	3.375	1.000	1.875	5.062
	1.000	3/4"-16 x 1.125	1"-14 x 1.125	7/8"-14 x 1.125	7/8"-14 x 1.875	1.499	.500	.875																1.375	2.250	5.437
2.000	.625	7/16"-20 x .750	5/8"-18 x .750	1/2"-20 x .750	1/2"-20 x 1.125	1.124	.375	.500	2.500	3/8	.375	.375	1.500	1.000	.344	.500	3.625	2.250	2.335	1.838	3.375	.312	4.125	1.000	1.875	5.094
	1.000	3/4"-16 x 1.125	1"-14 x 1.125	7/8"-14 x 1.125	7/8"-14 x 1.875	1.499	.500	.875																1.375	2.250	5.469
	1.375	1"-14 x 1.625	1 3/8"-12 x 1.625	1 1/4"-12 x 1.625	1 1/4"-12 x 2.500	1.999	.625	1.125																1.625	2.500	5.719
2.500	.625	7/16"-20 x .750	5/8"-18 x .750	1/2"-20 x .750	1/2"-20 x 1.125	1.124	.375	.500	3.000	3/8	.375	.375	1.500	1.000	.344	.500	3.750	2.750	2.460	2.192	3.875	.312	4.625	1.000	1.875	5.219
	1.000	3/4"-16 x 1.125	1"-14 x 1.125	7/8"-14 x 1.125	7/8"-14 x 1.875	1.499	.500	.875																1.375	2.250	5.594
	1.375	1"-14 x 1.625	1 3/8"-12 x 1.625	1 1/4"-12 x 1.625	1 1/4"-12 x 2.500	1.999	.625	1.125																1.625	2.500	5.844
	1.750	1 1/4"-12 x 2.000	1 3/4"-12 x 2.000	1 1/2"-12 x 2.000	1 1/2"-12 x 3.000	2.374	.750	1.500																1.875	2.750	6.094
3.250	1.000	3/4"-16 x 1.125	1"-14 x 1.125	7/8"-14 x 1.125	7/8"-14 x 1.875	1.499	.500	.875	3.750	1/2	.625	.438	1.750	1.250	.438	.562	4.250	3.500	2.750	2.758	4.688	.375	5.500	1.375	2.375	6.188
	1.375	1"-14 x 1.625	1 3/8"-12 x 1.625	1 1/4"-12 x 1.625	1 1/4"-12 x 2.500	1.999	.625	1.125																1.625	2.625	6.438
	1.750	1 1/4"-12 x 2.000	1 3/4"-12 x 2.000	1 1/2"-12 x 2.000	1 1/2"-12 x 3.000	2.374	.750	1.500																1.875	2.875	6.688
	2.000	1 1/2"-12 x 2.250	2"-12 x 2.250	1 3/4"-12 x 2.250	1 3/4"-12 x 3.500	2.624	.875	1.688																2.000	3.000	6.813
4.000	1.000	3/4"-16 x 1.125	1"-14 x 1.125	7/8"-14 x 1.125	7/8"-14 x 1.875	1.499	.500	.875	4.500	1/2	.625	.438	1.750	1.250	.438	.562	4.250	4.250	2.750	3.323	5.438	.375	6.250	1.375	2.375	6.188
	1.375	1"-14 x 1.625	1 3/8"-12 x 1.625	1 1/4"-12 x 1.625	1 1/4"-12 x 2.500	1.999	.625	1.125																1.625	2.625	6.438
	1.750	1 1/4"-12 x 2.000	1 3/4"-12 x 2.000	1 1/2"-12 x 2.000	1 1/2"-12 x 3.000	2.374	.750	1.500																1.875	2.875	6.688
	2.000	1 1/2"-12 x 2.250	2"-12 x 2.250	1 3/4"-12 x 2.250	1 3/4"-12 x 3.500	2.624	.875	1.688																2.000	3.000	6.813
	2.500	1 7/8"-12 x 3.000	2 1/2"-12 x 3.000	2 1/4"-12 x 3.000	2 1/4"-12 x 4.500	3.124	1.000	2.062																2.250	3.250	7.063
5.000	1.000	3/4"-16 x 1.125	1"-14 x 1.125	7/8"-14 x 1.125	7/8"-14 x 1.875	1.499	.500	.875	5.500	1/2	.625	.562	1.750	1.250	.594	.750	4.500	5.250	3.000	4.101	6.625	.500	7.625	1.375	2.375	6.594
	1.375	1"-14 x 1.625	1 3/8"-12 x 1.625	1 1/4"-12 x 1.625	1 1/4"-12 x 2.500	1.999	.625	1.125																1.625	2.625	6.844
	1.750	1 1/4"-12 x 2.000	1 3/4"-12 x 2.000	1 1/2"-12 x 2.000	1 1/2"-12 x 3.000	2.374	.750	1.500																1.875	2.875	7.094
	2.000	1 1/2"-12 x 2.250	2"-12 x 2.250	1 3/4"-12 x 2.250	1 3/4"-12 x 3.500	2.624	.875	1.688																2.000	3.000	7.219
	2.500	1 7/8"-12 x 3.000	2 1/2"-12 x 3.000	2 1/4"-12 x 3.000	2 1/4"-12 x 4.500	3.124	1.000	2.062																2.250	3.250	7.469
	3.000	2 1/4"-12 x 3.500	3"-12 x 3.500	2 3/4"-12 x 3.500	2 3/4"-12 x 5.500	3.749	1.000	2.625																2.250	3.250	7.469
	3.500	2 1/2"-12 x 3.500	3 1/2"-12 x 3.500	3 1/4"-12 x 3.500	3 1/4"-12 x 6.500	4.249	1.000	3.000																2.250	3.250	7.469
6.000	1.375	1"-14 x 1.625	1 3/8"-12 x 1.625	1 1/4"-12 x 1.625	1 1/4"-12 x 2.500	1.999	.625	1.125	6.500	3/4	.750	.562	2.000	1.500	.594	.750	5.000	6.250	3.250	4.879	7.625	.500	8.625	1.625	2.750	7.344
	1.750	1 1/4"-12 x 2.000	1 3/4"-12 x 2.000	1 1/2"-12 x 2.000	1 1/2"-12 x 3.000	2.374	.750	1.500																1.875	3.000	7.594
	2.000	1 1/2"-12 x 2.250	2"-12 x 2.250	1 3/4"-12 x 2.250	1 3/4"-12 x 3.500	2.624	.875	1.688																2.000	3.125	7.719
	2.500	1 7/8"-12 x 3.000	2 1/2"-12 x 3.000	2 1/4"-12 x 3.000	2 1/4"-12 x 4.500	3.124	1.000	2.062																2.250	3.375	7.969
	3.000	2 1/4"-12 x 3.500	3"-12 x 3.500	2 3/4"-12 x 3.500	2 3/4"-12 x 5.500	3.749	1.000	2.625																2.250	3.375	7.969
	3.500	2 1/2"-12 x 3.500	3 1/2"-12 x 3.500	3 1/4"-12 x 3.500	3 1/4"-12 x 6.500	4.249	1.000	3.000																2.250	3.375	7.969
	4.000	3"-12 x 4.000	4"-12 x 4.000	3 3/4"-12 x 4.000	3 3/4"-12 x 7.500	4.749	1.000	3.375																2.250	3.375	7.969
BORE	MM	KM & KF	KD	KI	KA	B	C	D	E	EE	F	FB	G	J	K	KN	LB	OD	P	R	TF	TR	UF	WB	Y	ZB

1.04

FILE: 1.04_MH4S2.dwg REV: 02/09/2010

27650 Groesbeck Hwy • Roseville, MI 48066-2759 • Phone 586.775.7211 • Fax 586.775.4545 • Toll Free 800.526.7968 • e-mail: sales@peninsularcylinders.com • www.peninsularcylinders.com

CAP RECTANGULAR FLANGE

Peninsular Mounting Style: **MH 5**

Heavy Duty Steel Air Cylinder

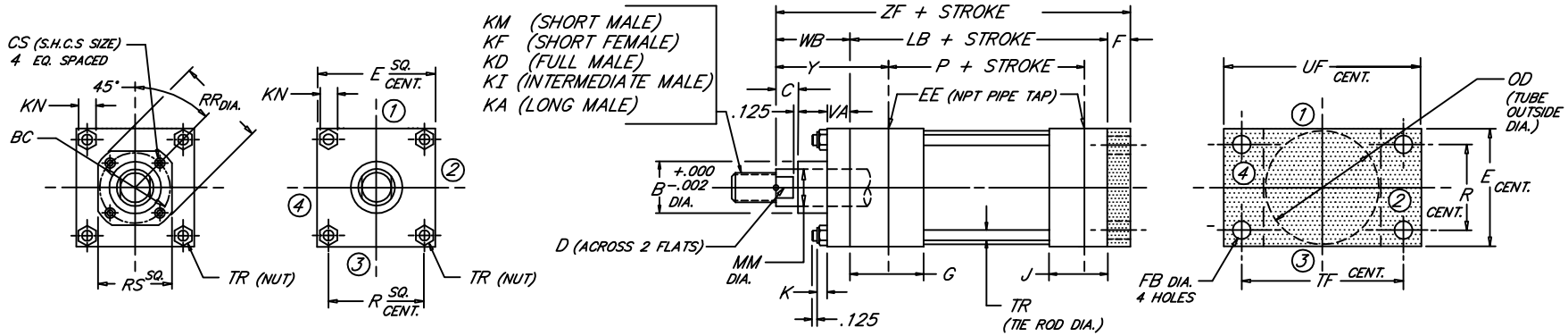

BORE	ROD MM	ROD THREAD X LENGTH KM & KF	KD	KI	KA	B	BC	C	CS	D	E	NPT EE	F	FB	G	J	K	KN	LB	OD	P	R	RR	RS	TF	TR	UF	VA	WB	Y	ZF
1.500	.625	7/16"-20 x .750	5/8"-18 x .750	1/2"-20 x .750	1/2"-20 x 1.125	1.124	---	.375	---	.500	2.000	3/8	.375	.312	1.500	1.000	.312	.438	3.625	1.750	2.335	1.428	---	---	2.750	.250	3.375	.375	1.000	1.875	5.000
	1.000	3/4"-16 x 1.125	1"-14 x 1.125	7/8"-14 x 1.125	7/8"-14 x 1.875	1.499		.500		.875																			1.375	2.250	5.375
2.000	.625	7/16"-20 x .750	5/8"-18 x .750	1/2"-20 x .750	1/2"-20 x 1.125	1.124	---	.375	---	.500	2.500	3/8	.375	.375	1.500	1.000	.344	.500	3.625	2.250	2.335	1.838	---	---	3.375	.312	4.125	.375	1.000	1.875	5.000
	1.000	3/4"-16 x 1.125	1"-14 x 1.125	7/8"-14 x 1.125	7/8"-14 x 1.875	1.499		.500		.875																			1.375	2.250	5.375
	1.375	1"-14 x 1.625	1 3/8"-12 x 1.625	1 1/4"-12 x 1.625	1 1/4"-12 x 2.500	1.999		.625		1.125																			1.625	2.500	5.625
2.500	.625	7/16"-20 x .750	5/8"-18 x .750	1/2"-20 x .750	1/2"-20 x 1.125	1.124	---	.375	---	.500	3.000	3/8	.375	.375	1.500	1.000	.344	.500	3.750	2.750	2.460	2.192	---	---	3.875	.312	4.625	.375	1.000	1.875	5.125
	1.000	3/4"-16 x 1.125	1"-14 x 1.125	7/8"-14 x 1.125	7/8"-14 x 1.875	1.499		.500		.875																			1.375	2.250	5.500
	1.375	1"-14 x 1.625	1 3/8"-12 x 1.625	1 1/4"-12 x 1.625	1 1/4"-12 x 2.500	1.999		.625		1.125																			1.625	2.500	5.750
	1.750	1 1/4"-12 x 2.000	1 3/4"-12 x 2.000	1 1/2"-12 x 2.000	1 1/2"-12 x 3.000	2.374		.750		1.500																			1.875	2.750	6.000
3.250	1.000	3/4"-16 x 1.125	1"-14 x 1.125	7/8"-14 x 1.125	7/8"-14 x 1.875	1.499	---	.500	---	.875	3.750	1/2	.625	.438	1.750	1.250	.438	.562	4.250	3.500	2.750	2.758	---	---	4.688	.375	5.500	.625	1.375	2.375	6.250
	1.375	1"-14 x 1.625	1 3/8"-12 x 1.625	1 1/4"-12 x 1.625	1 1/4"-12 x 2.500	1.999		.625		1.125																			1.625	2.625	6.500
	1.750	1 1/4"-12 x 2.000	1 3/4"-12 x 2.000	1 1/2"-12 x 2.000	1 1/2"-12 x 3.000	2.374		.750		1.500																			1.875	2.875	6.750
	2.000	1 1/2"-12 x 2.250	2"-12 x 2.250	1 3/4"-12 x 2.250	1 3/4"-12 x 3.500	2.624		.875		1.688																			2.000	3.000	6.875
4.000	1.000	3/4"-16 x 1.125	1"-14 x 1.125	7/8"-14 x 1.125	7/8"-14 x 1.875	1.499	2.562	.500	.250	.875	4.500	1/2	.625	.438	1.750	1.250	.438	.562	4.250	4.250	2.750	3.323	2.969	2.500	5.438	.375	6.250	.625	1.375	2.375	6.250
	1.375	1"-14 x 1.625	1 3/8"-12 x 1.625	1 1/4"-12 x 1.625	1 1/4"-12 x 2.500	1.999	2.562	.625	.250	1.125													2.969	2.500					1.625	2.625	6.500
	1.750	1 1/4"-12 x 2.000	1 3/4"-12 x 2.000	1 1/2"-12 x 2.000	1 1/2"-12 x 3.000	2.374	3.267	.750	.312	1.500													3.734	3.000					1.875	2.875	6.750
	2.000	1 1/2"-12 x 2.250	2"-12 x 2.250	1 3/4"-12 x 2.250	1 3/4"-12 x 3.500	2.624	---	.875	---	1.688													---	---					2.000	3.000	6.875
	2.500	1 7/8"-12 x 3.000	2 1/2"-12 x 3.000	2 1/4"-12 x 3.000	2 1/4"-12 x 4.500	3.124	---	1.000	---	2.062													---	---					2.250	3.250	7.125
5.000	1.000	3/4"-16 x 1.125	1"-14 x 1.125	7/8"-14 x 1.125	7/8"-14 x 1.875	1.499	2.562	.500	.250	.875	5.500	1/2	.625	.562	1.750	1.250	.594	.750	4.500	5.250	3.000	4.101	2.969	2.500	6.625	.500	7.625	.625	1.375	2.375	6.500
	1.375	1"-14 x 1.625	1 3/8"-12 x 1.625	1 1/4"-12 x 1.625	1 1/4"-12 x 2.500	1.999	2.562	.625	.250	1.125													2.969	2.500					1.625	2.625	6.750
	1.750	1 1/4"-12 x 2.000	1 3/4"-12 x 2.000	1 1/2"-12 x 2.000	1 1/2"-12 x 3.000	2.374	3.267	.750	.312	1.500													3.734	3.000					1.875	2.875	7.000
	2.000	1 1/2"-12 x 2.250	2"-12 x 2.250	1 3/4"-12 x 2.250	1 3/4"-12 x 3.500	2.624	3.812	.875	.312	1.688													4.312	3.750					2.000	3.000	7.125
	2.500	1 7/8"-12 x 3.000	2 1/2"-12 x 3.000	2 1/4"-12 x 3.000	2 1/4"-12 x 4.500	3.124	3.812	1.000	.312	2.062													4.312	3.750					2.250	3.250	7.375
	3.000	2 1/4"-12 x 3.500	3"-12 x 3.500	2 3/4"-12 x 3.500	2 3/4"-12 x 5.500	3.749	---	1.000	---	2.625													---	---					2.250	3.250	7.375
	3.500	2 1/2"-12 x 3.500	3 1/2"-12 x 3.500	3 1/4"-12 x 3.500	3 1/4"-12 x 6.500	4.249	---	1.000	---	3.000													---	---					2.250	3.250	7.375
6.000	1.375	1"-14 x 1.625	1 3/8"-12 x 1.625	1 1/4"-12 x 1.625	1 1/4"-12 x 2.500	1.999	3.267	.625	.312	1.125	6.500	3/4	.750	.562	2.000	1.500	.594	.750	5.000	6.250	3.250	4.879	3.734	3.000	7.625	.500	8.625	.625	1.625	2.750	7.375
	1.750	1 1/4"-12 x 2.000	1 3/4"-12 x 2.000	1 1/2"-12 x 2.000	1 1/2"-12 x 3.000	2.374	3.267	.750	.312	1.500													3.734	3.000				.625	1.875	3.000	7.625
	2.000	1 1/2"-12 x 2.250	2"-12 x 2.250	1 3/4"-12 x 2.250	1 3/4"-12 x 3.500	2.624	3.812	.875	.312	1.688													4.312	3.750				.625	2.000	3.125	7.750
	2.500	1 7/8"-12 x 3.000	2 1/2"-12 x 3.000	2 1/4"-12 x 3.000	2 1/4"-12 x 4.500	3.124	3.812	1.000	.312	2.062													4.312	3.750				.625	2.250	3.375	8.000
	3.000	2 1/4"-12 x 3.500	3"-12 x 3.500	2 3/4"-12 x 3.500	2 3/4"-12 x 5.500	3.749	4.700	1.000	.375	2.625													5.562	4.500				.625	2.250	3.375	8.000
	3.500	2 1/2"-12 x 3.500	3 1/2"-12 x 3.500	3 1/4"-12 x 3.500	3 1/4"-12 x 6.500	4.249	5.200	1.000	.375	3.000													6.062	5.000				.625	2.250	3.375	8.000
	4.000	3"-12 x 4.000	4"-12 x 4.000	3 3/4"-12 x 4.000	3 3/4"-12 x 7.500	4.749	---	1.000	---	3.375													---	---				.750	2.250	3.375	8.000
BORE	MM	KM & KF	KD	KI	KA	B	BC	C	CS	D	E	EE	F	FB	G	J	K	KN	LB	OD	P	R	RR	RS	TF	TR	UF	VA	WB	Y	ZF

1.05

FILE: 1.05_MH5S2.dwg REV: 02/09/2010

27650 Groesbeck Hwy • Roseville, MI 48066-2759 • Phone 586.775.7211 • Fax 586.775.4545 • Toll Free 800.526.7968 • e-mail: sales@peninsularcylinders.com • www.peninsularcylinders.com

INTERMEDIATE TRUNNION

Heavy Duty Steel Air Cylinder

Peninsular Mounting Style: **MH 6**

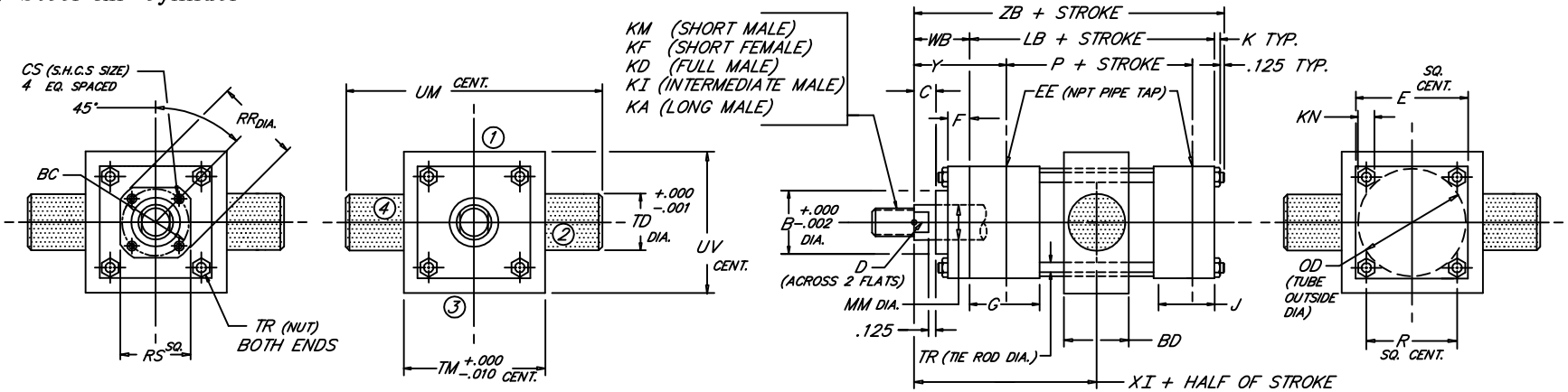

BORE	ROD MM	ROD THREAD X LENGTH KM & KF	KD	KI	KA	B	BC	BD	C	CS	D	E	NPT EE	F	G	J	K	KN	LB	OD	P	R	RR	RS	TD	TM	TR	UM	UV	WB	XI	Y	ZB	MINIMUM STROKE
1.500	.625	7/16"-20 x .750	5/8"-18 x .750	1/2"-20 x .750	1/2"-20 x 1.125	1.124	---	1.25	.375	---	.500	2.000	3/8	.375	1.500	1.000	.312	.438	3.625	1.750	2.335	1.428	---	---	1.000	2.500	.250	4.500	2.500	1.000	3.063	1.875	5.062	.125
	1.000	3/4"-16 x 1.125	1"-14 x 1.125	7/8"-14 x 1.125	7/8"-14 x 1.875	1.499			.500		.875																			1.375	3.438	2.250	5.437	
2.000	.625	7/16"-20 x .750	5/8"-18 x .750	1/2"-20 x .750	1/2"-20 x 1.125	1.124	---	1.50	.375	---	.500	2.500	3/8	.375	1.500	1.000	.344	.500	3.625	2.250	2.335	1.838	---	---	1.000	3.000	.312	5.000	3.000	1.000	3.063	1.875	5.094	.375
	1.000	3/4"-16 x 1.125	1"-14 x 1.125	7/8"-14 x 1.125	7/8"-14 x 1.875	1.499			.500		.875																			1.375	3.438	2.250	5.469	
	1.375	1"-14 x 1.625	1 3/8"-12 x 1.625	1 1/4"-12 x 1.625	1 1/4"-12 x 2.500	1.999			.625		1.125																			1.625	3.688	2.500	5.719	
2.500	.625	7/16"-20 x .750	5/8"-18 x .750	1/2"-20 x .750	1/2"-20 x 1.125	1.124	---	1.50	.375	---	.500	3.000	3/8	.375	1.500	1.000	.344	.500	3.750	2.750	2.460	2.192	---	---	1.000	3.500	.312	5.500	3.500	1.000	3.125	1.875	5.219	.250
	1.000	3/4"-16 x 1.125	1"-14 x 1.125	7/8"-14 x 1.125	7/8"-14 x 1.875	1.499			.500		.875																			1.375	3.500	2.250	5.594	
	1.375	1"-14 x 1.625	1 3/8"-12 x 1.625	1 1/4"-12 x 1.625	1 1/4"-12 x 2.500	1.999			.625		1.125																			1.625	3.750	2.500	5.844	
	1.750	1 1/4"-12 x 2.000	1 3/4"-12 x 2.000	1 1/2"-12 x 2.000	1 1/2"-12 x 3.000	2.374			.750		1.500																			1.875	4.000	2.750	6.094	
3.250	1.000	3/4"-16 x 1.125	1"-14 x 1.125	7/8"-14 x 1.125	7/8"-14 x 1.875	1.499	---	2.00	.500	---	.875	3.750	1/2	.625	1.750	1.250	.438	.562	4.250	3.500	2.750	2.758	---	---	1.000	4.500	.375	6.500	4.250	1.375	3.750	2.375	6.188	.750
	1.375	1"-14 x 1.625	1 3/8"-12 x 1.625	1 1/4"-12 x 1.625	1 1/4"-12 x 2.500	1.999			.625		1.125																			1.625	4.000	2.625	6.438	
	1.750	1 1/4"-12 x 2.000	1 3/4"-12 x 2.000	1 1/2"-12 x 2.000	1 1/2"-12 x 3.000	2.374			.750		1.500																			1.875	4.250	2.875	6.688	
	2.000	1 1/2"-12 x 2.250	2"-12 x 2.250	1 3/4"-12 x 2.250	1 3/4"-12 x 3.500	2.624			.875		1.688																			2.000	4.375	3.000	6.813	
4.000	1.000	3/4"-16 x 1.125	1"-14 x 1.125	7/8"-14 x 1.125	7/8"-14 x 1.875	1.499	2.562	2.00	.500	.250	.875	4.500	1/2	.625	1.750	1.250	.438	.562	4.250	4.250	2.750	3.323	2.969	2.500	1.000	5.250	.375	7.250	5.000	1.375	3.750	2.375	6.188	.750
	1.375	1"-14 x 1.625	1 3/8"-12 x 1.625	1 1/4"-12 x 1.625	1 1/4"-12 x 2.500	1.999	2.562		.625	.250	1.125												2.969	2.500						1.625	4.000	2.625	6.438	
	1.750	1 1/4"-12 x 2.000	1 3/4"-12 x 2.000	1 1/2"-12 x 2.000	1 1/2"-12 x 3.000	2.374	3.267		.750	.312	1.500												3.734	3.000						1.875	4.250	2.875	6.688	
	2.000	1 1/2"-12 x 2.250	2"-12 x 2.250	1 3/4"-12 x 2.250	1 3/4"-12 x 3.500	2.624	---		.875	---	1.688												---	---						2.000	4.375	3.000	6.813	
	2.500	1 7/8"-12 x 3.000	2 1/2"-12 x 3.000	2 1/4"-12 x 3.000	2 1/4"-12 x 4.500	3.124	---		1.000	---	2.062												---	---						2.250	4.625	3.250	7.063	
5.000	1.000	3/4"-16 x 1.125	1"-14 x 1.125	7/8"-14 x 1.125	7/8"-14 x 1.875	1.499	2.562	2.00	.500	.250	.875	5.500	1/2	.625	1.750	1.250	.594	.750	4.500	5.250	3.000	4.101	2.969	2.500	1.000	6.250	.500	8.250	6.000	1.375	3.875	2.375	6.594	.500
	1.375	1"-14 x 1.625	1 3/8"-12 x 1.625	1 1/4"-12 x 1.625	1 1/4"-12 x 2.500	1.999	2.562		.625	.250	1.125												2.969	2.500						1.625	4.125	2.625	6.844	
	1.750	1 1/4"-12 x 2.000	1 3/4"-12 x 2.000	1 1/2"-12 x 2.000	1 1/2"-12 x 3.000	2.374	3.267		.750	.312	1.500												3.734	3.000						1.875	4.375	2.875	7.094	
	2.000	1 1/2"-12 x 2.250	2"-12 x 2.250	1 3/4"-12 x 2.250	1 3/4"-12 x 3.500	2.624	3.812		.875	.312	1.688												4.312	3.750						2.000	4.500	3.000	7.219	
	2.500	1 7/8"-12 x 3.000	2 1/2"-12 x 3.000	2 1/4"-12 x 3.000	2 1/4"-12 x 4.500	3.124	3.812		1.000	.312	2.062												4.312	3.750						2.250	4.750	3.250	7.469	
	3.000	2 1/4"-12 x 3.500	3"-12 x 3.500	2 3/4"-12 x 3.500	2 3/4"-12 x 5.500	3.749	---		1.000	---	2.625												---	---						2.250	4.750	3.250	7.469	
	3.500	2 1/2"-12 x 3.500	3 1/2"-12 x 3.500	3 1/4"-12 x 3.500	3 1/4"-12 x 6.500	4.249	---		1.000	---	3.000												---	---						2.250	4.750	3.250	7.469	
6.000	1.375	1"-14 x 1.625	1 3/8"-12 x 1.625	1 1/4"-12 x 1.625	1 1/4"-12 x 2.500	1.999	3.267	2.50	.625	.312	1.125	6.500	3/4	.625	2.000	1.500	.594	.750	5.000	6.250	3.250	4.879	3.734	3.000	1.375	7.625	.500	10.375	7.000	1.625	4.375	2.750	7.344	1.000
	1.750	1 1/4"-12 x 2.000	1 3/4"-12 x 2.000	1 1/2"-12 x 2.000	1 1/2"-12 x 3.000	2.374	3.267		.750	.312	1.500			.625									3.734	3.000						1.875	4.625	3.000	7.594	
	2.000	1 1/2"-12 x 2.250	2"-12 x 2.250	1 3/4"-12 x 2.250	1 3/4"-12 x 3.500	2.624	3.812		.875	.312	1.688			.625									4.312	3.750						2.000	4.750	3.125	7.719	
	2.500	1 7/8"-12 x 3.000	2 1/2"-12 x 3.000	2 1/4"-12 x 3.000	2 1/4"-12 x 4.500	3.124	3.812		1.000	.312	2.062			.625									4.312	3.750						2.250	5.000	3.375	7.969	
	3.000	2 1/4"-12 x 3.500	3"-12 x 3.500	2 3/4"-12 x 3.500	2 3/4"-12 x 5.500	3.749	4.700		1.000	.375	2.625			.625									5.562	4.500						2.250	5.000	3.375	7.969	
	3.500	2 1/2"-12 x 3.500	3 1/2"-12 x 3.500	3 1/4"-12 x 3.500	3 1/4"-12 x 6.500	4.249	5.200		1.000	.375	3.000			.625									6.062	5.000						2.250	5.000	3.375	7.969	
	4.000	3"-12 x 4.000	4"-12 x 4.000	3 3/4"-12 x 4.000	3 3/4"-12 x 7.500	4.749	---		1.000	---	3.375			.750									---	---						2.250	5.000	3.375	7.969	
BORE	MM	KM & KF	KD	KI	KA	B	BC	BD	C	CS	D	E	EE	F	G	J	K	KN	LB	OD	P	R	RR	RS	TD	TM	TR	UM	UV	WB	XI	Y	ZB	MIN STR

1.06

FILE: 1.06_MH6S2.dwg REV: 02/09/2010

27650 Groesbeck Hwy • Roseville, MI 48066-2759 • Phone 586.775.7211 • Fax 586.775.4545 • Toll Free 800.526.7968 • e-mail: sales@peninsularcylinders.com • www.peninsularcylinders.com

CAP TRUNNION

Heavy Duty Steel Air Cylinder

Peninsular Mounting Style: **MH 7**

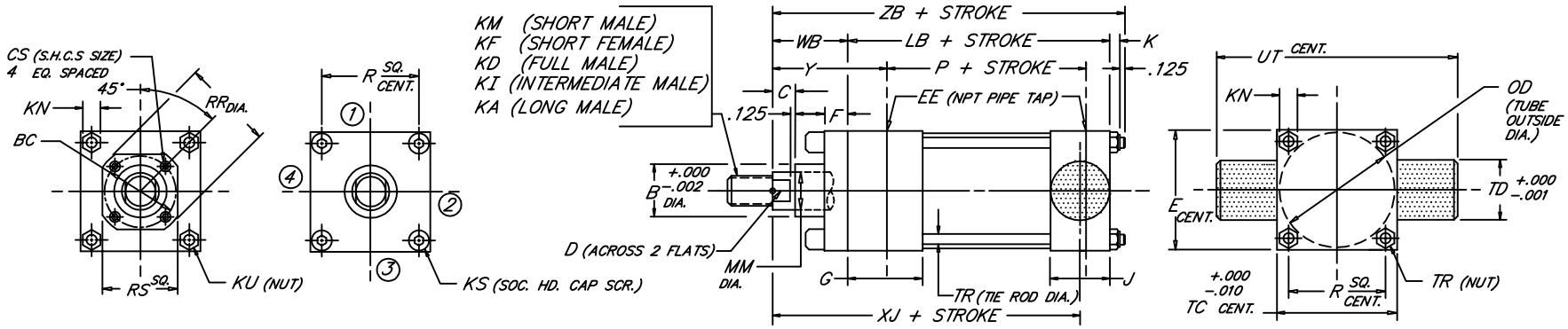

BORE	ROD MM	ROD THREAD X LENGTH KM & KF	KD	KI	KA	B	BC	C	CS	D	E	NPT EE	F	G	J	K	KN	KS	KU	LB	OD	P	R	RR	RS	TC	TD	TR	UT	WB	Y	XJ	ZB
1.500	.625	7/16"-20 x .750	5/8"-18 x .750	1/2"-20 x .750	1/2"-20 x 1.125	1.124	---	.375	---	.500	2.000	3/8	.375	1.500	1.000	.312	.438	.250	---	3.625	1.750	2.335	1.428	---	---	2.000	1.000	.250	4.000	1.000	1.875	4.125	5.062
	1.000	3/4"-16 x 1.125	1"-14 x 1.125	7/8"-14 x 1.125	7/8"-14 x 1.875	1.499		.500		.875																				1.375	2.250	4.500	5.437
2.000	.625	7/16"-20 x .750	5/8"-18 x .750	1/2"-20 x .750	1/2"-20 x 1.125	1.124	---	.375	---	.500	2.500	3/8	.375	1.500	1.000	.344	.500	.312	---	3.625	2.250	2.335	1.838	---	---	2.500	1.000	.312	4.500	1.000	1.875	4.125	5.094
	1.000	3/4"-16 x 1.125	1"-14 x 1.125	7/8"-14 x 1.125	7/8"-14 x 1.875	1.499		.500		.875																				1.375	2.250	4.500	5.469
	1.375	1"-14 x 1.625	1 3/8"-12 x 1.625	1 1/4"-12 x 1.625	1 1/4"-12 x 2.500	1.999		.625		1.125																				1.625	2.500	4.750	5.719
2.500	.625	7/16"-20 x .750	5/8"-18 x .750	1/2"-20 x .750	1/2"-20 x 1.125	1.124	---	.375	---	.500	3.000	3/8	.375	1.500	1.000	.344	.500	.312	---	3.750	2.750	2.460	2.192	---	---	3.000	1.000	.312	5.000	1.000	1.875	4.250	5.219
	1.000	3/4"-16 x 1.125	1"-14 x 1.125	7/8"-14 x 1.125	7/8"-14 x 1.875	1.499		.500		.875																				1.375	2.250	4.625	5.594
	1.375	1"-14 x 1.625	1 3/8"-12 x 1.625	1 1/4"-12 x 1.625	1 1/4"-12 x 2.500	1.999		.625		1.125																				1.625	2.500	4.875	5.844
	1.750	1 1/4"-12 x 2.000	1 3/4"-12 x 2.000	1 1/2"-12 x 2.000	1 1/2"-12 x 3.000	2.374		.750		1.500																				1.875	2.750	5.125	6.094
3.250	1.000	3/4"-16 x 1.125	1"-14 x 1.125	7/8"-14 x 1.125	7/8"-14 x 1.875	1.499	---	.500	---	.875	3.750	1/2	.625	1.750	1.250	.438	.562	.375	---	4.250	3.500	2.750	2.758	---	---	3.750	1.000	.375	5.750	1.375	2.375	5.000	6.188
	1.375	1"-14 x 1.625	1 3/8"-12 x 1.625	1 1/4"-12 x 1.625	1 1/4"-12 x 2.500	1.999		.625		1.125																				1.625	2.625	5.250	6.438
	1.750	1 1/4"-12 x 2.000	1 3/4"-12 x 2.000	1 1/2"-12 x 2.000	1 1/2"-12 x 3.000	2.374		.750		1.500																				1.875	2.875	5.500	6.688
	2.000	1 1/2"-12 x 2.250	2"-12 x 2.250	1 3/4"-12 x 2.250	1 3/4"-12 x 3.500	2.624		.875		1.688																				2.000	3.000	5.625	6.813
4.000	1.000	3/4"-16 x 1.125	1"-14 x 1.125	7/8"-14 x 1.125	7/8"-14 x 1.875	1.499	2.562	.500	.250	.875	4.500	1/2	.625	1.750	1.250	.438	.562	---	.375	4.250	4.250	2.750	3.323	2.969	2.500	4.500	1.000	.375	6.500	1.375	2.375	5.000	6.188
	1.375	1"-14 x 1.625	1 3/8"-12 x 1.625	1 1/4"-12 x 1.625	1 1/4"-12 x 2.500	1.999	2.562	.625	.250	1.125								---	.375					2.969	2.500					1.625	2.625	5.250	6.438
	1.750	1 1/4"-12 x 2.000	1 3/4"-12 x 2.000	1 1/2"-12 x 2.000	1 1/2"-12 x 3.000	2.374	3.267	.750	.312	1.500								---	.375					3.734	3.000					1.875	2.875	5.500	6.688
	2.000	1 1/2"-12 x 2.250	2"-12 x 2.250	1 3/4"-12 x 2.250	1 3/4"-12 x 3.500	2.624	---	.875	---	1.688								.375	---					---	---					2.000	3.000	5.625	6.813
	2.500	1 7/8"-12 x 3.000	2 1/2"-12 x 3.000	2 1/4"-12 x 3.000	2 1/4"-12 x 4.500	3.124	---	1.000	---	2.062								.375	---					---	---					2.250	3.250	5.875	7.063
5.000	1.000	3/4"-16 x 1.125	1"-14 x 1.125	7/8"-14 x 1.125	7/8"-14 x 1.875	1.499	2.562	.500	.250	.875	5.500	1/2	.625	1.750	1.250	.594	.750	---	.500	4.500	5.250	3.000	4.101	2.969	2.500	5.500	1.000	.500	7.500	1.375	2.375	5.250	6.594
	1.375	1"-14 x 1.625	1 3/8"-12 x 1.625	1 1/4"-12 x 1.625	1 1/4"-12 x 2.500	1.999	2.562	.625	.250	1.125								---	.500					2.969	2.500					1.625	2.625	5.500	6.844
	1.750	1 1/4"-12 x 2.000	1 3/4"-12 x 2.000	1 1/2"-12 x 2.000	1 1/2"-12 x 3.000	2.374	3.267	.750	.312	1.500								---	.500					3.734	3.000					1.875	2.875	5.750	7.094
	2.000	1 1/2"-12 x 2.250	2"-12 x 2.250	1 3/4"-12 x 2.250	1 3/4"-12 x 3.500	2.624	3.812	.875	.312	1.688								---	.500					4.312	3.750					2.000	3.000	5.875	7.219
	2.500	1 7/8"-12 x 3.000	2 1/2"-12 x 3.000	2 1/4"-12 x 3.000	2 1/4"-12 x 4.500	3.124	3.812	1.000	.312	2.062								---	.500					4.312	3.750					2.250	3.250	6.125	7.469
	3.000	2 1/4"-12 x 3.500	3"-12 x 3.500	2 3/4"-12 x 3.500	2 3/4"-12 x 5.500	3.749	---	1.000	---	2.625								.500	---					---	---					2.250	3.250	6.125	7.469
	3.500	2 1/2"-12 x 3.500	3 1/2"-12 x 3.500	3 1/4"-12 x 3.500	3 1/4"-12 x 6.500	4.249	---	1.000	---	3.000								.500	---					---	---					2.250	3.250	6.125	7.469
6.000	1.375	1"-14 x 1.625	1 3/8"-12 x 1.625	1 1/4"-12 x 1.625	1 1/4"-12 x 2.500	1.999	3.267	.625	.312	1.125	6.500	3/4	.625	2.000	1.500	.594	.750	---	.500	5.000	6.250	3.250	4.879	3.734	3.000	6.500	1.375	.500	9.250	1.625	2.750	5.875	7.344
	1.750	1 1/4"-12 x 2.000	1 3/4"-12 x 2.000	1 1/2"-12 x 2.000	1 1/2"-12 x 3.000	2.374	3.267	.750	.312	1.500			.625					---	.500					3.734	3.000					1.875	3.000	6.125	7.594
	2.000	1 1/2"-12 x 2.250	2"-12 x 2.250	1 3/4"-12 x 2.250	1 3/4"-12 x 3.500	2.624	3.812	.875	.312	1.688			.625					---	.500					4.312	3.750					2.000	3.125	6.250	7.719
	2.500	1 7/8"-12 x 3.000	2 1/2"-12 x 3.000	2 1/4"-12 x 3.000	2 1/4"-12 x 4.500	3.124	3.812	1.000	.312	2.062			.625					---	.500					4.312	3.750					2.250	3.375	6.500	7.969
	3.000	2 1/4"-12 x 3.500	3"-12 x 3.500	2 3/4"-12 x 3.500	2 3/4"-12 x 5.500	3.749	4.700	1.000	.375	2.625			.625					---	.500					5.562	4.500					2.250	3.375	6.500	7.969
	3.500	2 1/2"-12 x 3.500	3 1/2"-12 x 3.500	3 1/4"-12 x 3.500	3 1/4"-12 x 6.500	4.249	5.200	1.000	.375	3.000			.625					---	.500					6.062	5.000					2.250	3.375	6.500	7.969
	4.000	3"-12 x 4.000	4"-12 x 4.000	3 3/4"-12 x 4.000	3 3/4"-12 x 7.500	4.749	---	1.000	---	3.375			.750					.500	---					---	---					2.250	3.375	6.500	7.969
BORE	MM	KM & KF	KD	KI	KA	B	BC	C	CS	D	E	EE	F	G	J	K	KN	KS	KU	LB	OD	P	R	RR	RS	TC	TD	TR	UT	WB	Y	XJ	ZB

1.07

FILE: 1.07_MH7S2.dwg REV: 02/09/2010

27650 Groesbeck Hwy • Roseville, MI 48066-2759 • Phone 586.775.7211 • Fax 586.775.4545 • Toll Free 800.526.7968 • e-mail: sales@peninsularcylinders.com • www.peninsularcylinders.com

CAP TRUNNION

Heavy Duty Steel Air Cylinder

Peninsular Mounting Style: **MH 7**

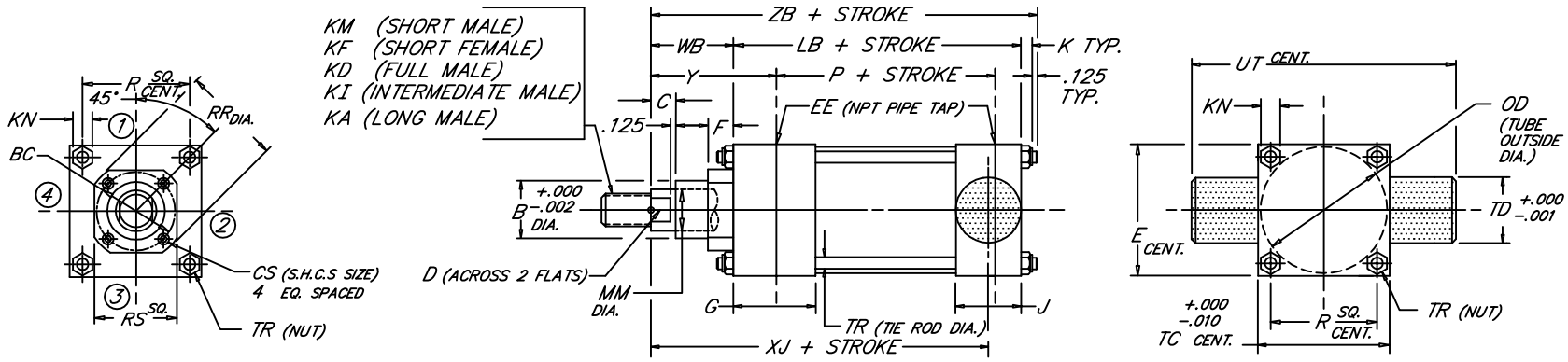

BORE	ROD MM	ROD THREAD X LENGTH KM & KF	KD	KI	KA	B	BC	C	CS	D	E	NPT EE	F	G	J	K	KN	LB	OD	P	R	RR	RS	TC	TD	TR	UT	WB	XJ	Y	ZB
8.000	1.375	1"-14 x 1.625	1 3/8"-12 x 1.625	1 1/4"-12 x 1.625	1 1/4"-12 x 2.500	1.999	3.267	.625	.312	1.125	8.500	3/4	.625	2.000	1.500	.750	.938	5.125	8.450	3.375	6.435	3.734	3.000	8.500	1.375	.625	11.250	1.625	6.000	2.750	7.625
	1.750	1 1/4"-12 x 2.000	1 3/4"-12 x 2.000	1 1/2"-12 x 2.000	1 1/2"-12 x 3.000	2.374	3.267	.750	.312	1.500												3.734	3.000					1.875	6.250	3.000	7.875
	2.000	1 1/2"-12 x 2.250	2"-12 x 2.250	1 3/4"-12 x 2.250	1 3/4"-12 x 3.500	2.624	3.812	.875	.312	1.688												4.312	3.750					2.000	6.375	3.125	8.000
	2.500	1 7/8"-12 x 3.000	2 1/2"-12 x 3.000	2 1/4"-12 x 3.000	2 1/4"-12 x 4.500	3.124	3.812	1.000	.312	2.062												4.312	3.750					2.250	6.625	3.375	8.250
	3.000	2 1/4"-12 x 3.500	3"-12 x 3.500	2 3/4"-12 x 3.500	2 3/4"-12 x 5.500	3.749	4.700	1.000	.375	2.625												5.562	4.500					2.250	6.625	3.375	8.250
	3.500	2 1/2"-12 x 3.500	3 1/2"-12 x 3.500	3 1/4"-12 x 3.500	3 1/4"-12 x 6.500	4.249	5.200	1.000	.375	3.000												6.062	5.000					2.250	6.625	3.375	8.250
	4.000	3"-12 x 4.000	4"-12 x 4.000	3 3/4"-12 x 4.000	3 3/4"-12 x 7.500	4.749	5.700	1.000	.375	3.375												6.562	5.500					2.250	6.625	3.375	8.250
	4.500	3 1/4"-12 x 4.500	4 1/2"-12 x 4.500	4 1/4"-12 x 4.500	4 1/4"-12 x 8.250	5.249	6.200	1.000	.375	3.875												7.062	6.000					2.250	6.625	3.375	8.250
	5.000	3 1/2"-12 x 5.000	5"-12 x 5.000	4 3/4"-12 x 5.000	4 3/4"-12 x 9.000	5.749	6.700	1.000	.375	4.250												7.562	6.500					2.250	6.625	3.375	8.250
	5.500	4"-12 x 5.500	5 1/2"-12 x 5.500	5 1/4"-12 x 5.500	5 1/4"-12 x 10.000	6.249	7.125	1.000	.375	4.625												7.938	7.000					2.250	6.625	3.375	8.250
10.000	1.750	1 1/4"-12 x 2.000	1 3/4"-12 x 2.000	1 1/2"-12 x 2.000	1 1/2"-12 x 3.000	2.374	3.812	.750	.312	1.500	10.625	1	.625	2.250	2.000	.875	1.062	6.375	10.450	4.250	7.920	4.312	3.750	10.625	1.750	.750	14.125	1.875	7.250	3.062	9.250
	2.000	1 1/2"-12 x 2.250	2"-12 x 2.250	1 3/4"-12 x 2.250	1 3/4"-12 x 3.500	2.624	3.812	.875	.312	1.688												4.312	3.750					2.000	7.375	3.187	9.375
	2.500	1 7/8"-12 x 3.000	2 1/2"-12 x 3.000	2 1/4"-12 x 3.000	2 1/4"-12 x 4.500	3.124	3.812	1.000	.312	2.062												4.312	3.750					2.250	7.625	3.437	9.625
	3.000	2 1/4"-12 x 3.500	3"-12 x 3.500	2 3/4"-12 x 3.500	2 3/4"-12 x 5.500	3.749	4.700	1.000	.375	2.625												5.562	4.500					2.250	7.625	3.437	9.625
	3.500	2 1/2"-12 x 3.500	3 1/2"-12 x 3.500	3 1/4"-12 x 3.500	3 1/4"-12 x 6.500	4.249	5.200	1.000	.375	3.000												6.062	5.000					2.250	7.625	3.437	9.625
	4.000	3"-12 x 4.000	4"-12 x 4.000	3 3/4"-12 x 4.000	3 3/4"-12 x 7.500	4.749	5.700	1.000	.375	3.375												6.562	5.500					2.250	7.625	3.437	9.625
	4.500	3 1/4"-12 x 4.500	4 1/2"-12 x 4.500	4 1/4"-12 x 4.500	4 1/4"-12 x 8.250	5.249	6.200	1.000	.375	3.875												7.062	6.000					2.250	7.625	3.437	9.625
	5.000	3 1/2"-12 x 5.000	5"-12 x 5.000	4 3/4"-12 x 5.000	4 3/4"-12 x 9.000	5.749	6.700	1.000	.375	4.250												7.562	6.500					2.250	7.625	3.437	9.625
	5.500	4"-12 x 5.500	5 1/2"-12 x 5.500	5 1/4"-12 x 5.500	5 1/4"-12 x 10.000	6.249	7.125	1.000	.375	4.625												7.938	7.000					2.250	7.625	3.437	9.625
12.000	2.000	1 1/2"-12 x 2.250	2"-12 x 2.250	1 3/4"-12 x 2.250	1 3/4"-12 x 3.500	2.624	3.812	.875	.312	1.688	12.750	1	.625	2.250	2.000	.875	1.062	6.875	12.450	4.750	9.405	4.312	3.750	12.750	1.750	.750	16.250	2.000	7.875	3.187	9.875
	2.500	1 7/8"-12 x 3.000	2 1/2"-12 x 3.000	2 1/4"-12 x 3.000	2 1/4"-12 x 4.500	3.124	3.812	1.000	.312	2.062												4.312	3.750					2.250	8.125	3.437	10.125
	3.000	2 1/4"-12 x 3.500	3"-12 x 3.500	2 3/4"-12 x 3.500	2 3/4"-12 x 5.500	3.749	4.700	1.000	.375	2.625												5.562	4.500					2.250	8.125	3.437	10.125
	3.500	2 1/2"-12 x 3.500	3 1/2"-12 x 3.500	3 1/4"-12 x 3.500	3 1/4"-12 x 6.500	4.249	5.200	1.000	.375	3.000												6.062	5.000					2.250	8.125	3.437	10.125
	4.000	3"-12 x 4.000	4"-12 x 4.000	3 3/4"-12 x 4.000	3 3/4"-12 x 7.500	4.749	5.700	1.000	.375	3.375												6.562	5.500					2.250	8.125	3.437	10.125
	4.500	3 1/4"-12 x 4.500	4 1/2"-12 x 4.500	4 1/4"-12 x 4.500	4 1/4"-12 x 8.250	5.249	6.200	1.000	.375	3.875												7.062	6.000					2.250	8.125	3.437	10.125
	5.000	3 1/2"-12 x 5.000	5"-12 x 5.000	4 3/4"-12 x 5.000	4 3/4"-12 x 9.000	5.749	6.700	1.000	.375	4.250												7.562	6.500					2.250	8.125	3.437	10.125
	5.500	4"-12 x 5.500	5 1/2"-12 x 5.500	5 1/4"-12 x 5.500	5 1/4"-12 x 10.000	6.249	7.125	1.000	.375	4.625												7.938	7.000					2.250	8.125	3.437	10.125
14.000	2.500	1 7/8"-12 x 3.000	2 1/2"-12 x 3.000	2 1/4"-12 x 3.000	2 1/4"-12 x 4.500	3.124	3.812		.312	2.062	14.750	1 1/4	.625	2.750	2.250	1.000	1.250	8.125	14.450	5.625	10.889	4.312	3.750	14.750	2.000	.875	18.750	2.250	9.250	3.688	11.500
	3.000	2 1/4"-12 x 3.500	3"-12 x 3.500	2 3/4"-12 x 3.500	2 3/4"-12 x 5.500	3.749	4.700		.375	2.625												5.562	4.500								
	3.500	2 1/2"-12 x 3.500	3 1/2"-12 x 3.500	3 1/4"-12 x 3.500	3 1/4"-12 x 6.500	4.249	5.200		.375	3.000												6.062	5.000								
	4.000	3"-12 x 4.000	4"-12 x 4.000	3 3/4"-12 x 4.000	3 3/4"-12 x 7.500	4.749	5.700	1.000	.375	3.375												6.562	5.500								
	4.500	3 1/4"-12 x 4.500	4 1/2"-12 x 4.500	4 1/4"-12 x 4.500	4 1/4"-12 x 8.250	5.249	6.200		.375	3.875												7.062	6.000								
	5.000	3 1/2"-12 x 5.000	5"-12 x 5.000	4 3/4"-12 x 5.000	4 3/4"-12 x 9.000	5.749	6.700		.375	4.250												7.562	6.500								
	5.500	4"-12 x 5.500	5 1/2"-12 x 5.500	5 1/4"-12 x 5.500	5 1/4"-12 x 10.000	6.249	7.125		.375	4.625												7.938	7.000								
BORE	MM	KM & KF	KD	KI	KA	B	BC	C	CS	D	E	EE	F	G	J	K	KN	LB	OD	P	R	RR	RS	TC	TD	TR	UT	WB	XJ	Y	ZB

FILE: 1.07_MH7L2.dwg REV: 02/09/2010

27650 Groesbeck Hwy • Roseville, MI 48066-2759 • Phone 586.775.7211 • Fax 586.775.4545 • Toll Free 800.526.7968 • e-mail: sales@peninsularcylinders.com • www.peninsularcylinders.com

HEAD TIE ROD EXTENDED

Peninsular Mounting Style: **MH 8**

Heavy Duty Steel Air Cylinder

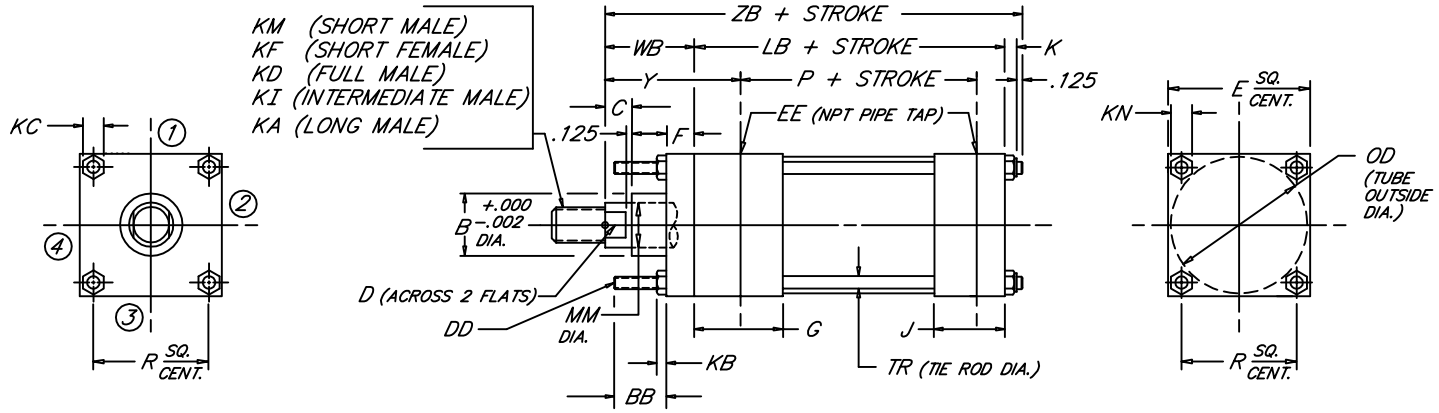

BORE	ROD MM	ROD THREAD X LENGTH KM & KF	KD	KI	KA	B	BB	C	D	DD	E	NPT EE	F	G	J	K	KB	KC	KN	LB	OD	P	R	TR	WB	Y	ZB
1.500	.625	7/16"-20 x .750	5/8"-18 x .750	1/2"-20 x .750	1/2"-20 x 1.125	1.124	1.000	.375	.500	1/4"-28	2.000	3/8	.375	1.500	1.000	.312	.218	.438	.438	3.625	1.750	2.335	1.428	.250	1.000	1.875	5.062
	1.000	3/4"-16 x 1.125	1"-14 x 1.125	7/8"-14 x 1.125	7/8"-14 x 1.875	1.499		.500	.875																1.375	2.250	5.437
2.000	.625	7/16"-20 x .750	5/8"-18 x .750	1/2"-20 x .750	1/2"-20 x 1.125	1.124	1.125	.375	.500	5/16"-24	2.500	3/8	.375	1.500	1.000	.344	.250	.500	.500	3.625	2.250	2.335	1.838	.312	1.000	1.875	5.094
	1.000	3/4"-16 x 1.125	1"-14 x 1.125	7/8"-14 x 1.125	7/8"-14 x 1.875	1.499		.500	.875																1.375	2.250	5.469
	1.375	1"-14 x 1.625	1 3/8"-12 x 1.625	1 1/4"-12 x 1.625	1 1/4"-12 x 2.500	1.999		.625	1.125																1.625	2.500	5.719
2.500	.625	7/16"-20 x .750	5/8"-18 x .750	1/2"-20 x .750	1/2"-20 x 1.125	1.124	1.125	.375	.500	5/16"-24	3.000	3/8	.375	1.500	1.000	.344	.250	.500	.500	3.750	2.750	2.460	2.192	.312	1.000	1.875	5.219
	1.000	3/4"-16 x 1.125	1"-14 x 1.125	7/8"-14 x 1.125	7/8"-14 x 1.875	1.499		.500	.875																1.375	2.250	5.594
	1.375	1"-14 x 1.625	1 3/8"-12 x 1.625	1 1/4"-12 x 1.625	1 1/4"-12 x 2.500	1.999		.625	1.125																1.625	2.500	5.844
	1.750	1 1/4"-12 x 2.000	1 3/4"-12 x 2.000	1 1/2"-12 x 2.000	1 1/2"-12 x 3.000	2.374		.750	1.500																1.875	2.750	6.094
3.250	1.000	3/4"-16 x 1.125	1"-14 x 1.125	7/8"-14 x 1.125	7/8"-14 x 1.875	1.499	1.375	.500	.875	3/8"-24	3.750	1/2	.625	1.750	1.250	.438	.328	.562	.562	4.250	3.500	2.750	2.758	.375	1.375	2.375	6.188
	1.375	1"-14 x 1.625	1 3/8"-12 x 1.625	1 1/4"-12 x 1.625	1 1/4"-12 x 2.500	1.999		.625	1.125																1.625	2.625	6.438
	1.750	1 1/4"-12 x 2.000	1 3/4"-12 x 2.000	1 1/2"-12 x 2.000	1 1/2"-12 x 3.000	2.374		.750	1.500																1.875	2.875	6.688
	2.000	1 1/2"-12 x 2.250	2"-12 x 2.250	1 3/4"-12 x 2.250	1 3/4"-12 x 3.500	2.624		.875	1.688																2.000	3.000	6.813
4.000	1.000	3/4"-16 x 1.125	1"-14 x 1.125	7/8"-14 x 1.125	7/8"-14 x 1.875	1.499	1.375	.500	.875	3/8"-24	4.500	1/2	.625	1.750	1.250	.438	.328	.562	.562	4.250	4.250	2.750	3.323	.375	1.375	2.375	6.188
	1.375	1"-14 x 1.625	1 3/8"-12 x 1.625	1 1/4"-12 x 1.625	1 1/4"-12 x 2.500	1.999		.625	1.125																1.625	2.625	6.438
	1.750	1 1/4"-12 x 2.000	1 3/4"-12 x 2.000	1 1/2"-12 x 2.000	1 1/2"-12 x 3.000	2.374		.750	1.500																1.875	2.875	6.688
	2.000	1 1/2"-12 x 2.250	2"-12 x 2.250	1 3/4"-12 x 2.250	1 3/4"-12 x 3.500	2.624		.875	1.688																2.000	3.000	6.813
	2.500	1 7/8"-12 x 3.000	2 1/2"-12 x 3.000	2 1/4"-12 x 3.000	2 1/4"-12 x 4.500	3.124		1.000	2.062																2.250	3.250	7.063
5.000	1.000	3/4"-16 x 1.125	1"-14 x 1.125	7/8"-14 x 1.125	7/8"-14 x 1.875	1.499	1.812	.500	.875	1/2"-20	5.500	1/2	.625	1.750	1.250	.594	.438	.750	.750	4.500	5.250	3.000	4.101	.500	1.375	2.375	6.594
	1.375	1"-14 x 1.625	1 3/8"-12 x 1.625	1 1/4"-12 x 1.625	1 1/4"-12 x 2.500	1.999		.625	1.125																1.625	2.625	6.844
	1.750	1 1/4"-12 x 2.000	1 3/4"-12 x 2.000	1 1/2"-12 x 2.000	1 1/2"-12 x 3.000	2.374		.750	1.500																1.875	2.875	7.094
	2.000	1 1/2"-12 x 2.250	2"-12 x 2.250	1 3/4"-12 x 2.250	1 3/4"-12 x 3.500	2.624		.875	1.688																2.000	3.000	7.219
	2.500	1 7/8"-12 x 3.000	2 1/2"-12 x 3.000	2 1/4"-12 x 3.000	2 1/4"-12 x 4.500	3.124		1.000	2.062																2.250	3.250	7.469
	3.000	2 1/4"-12 x 3.500	3"-12 x 3.500	2 3/4"-12 x 3.500	2 3/4"-12 x 5.500	3.749		1.000	2.625																2.250	3.250	7.469
	3.500	2 1/2"-12 x 3.500	3 1/2"-12 x 3.500	3 1/4"-12 x 3.500	3 1/4"-12 x 6.500	4.249		1.000	3.000																2.250	3.250	7.469
6.000	1.375	1"-14 x 1.625	1 3/8"-12 x 1.625	1 1/4"-12 x 1.625	1 1/4"-12 x 2.500	1.999	1.812	.625	1.125	1/2"-20	6.500	3/4	.750	2.000	1.500	.594	.438	.750	.750	5.000	6.250	3.250	4.879	.500	1.625	2.750	7.344
	1.750	1 1/4"-12 x 2.000	1 3/4"-12 x 2.000	1 1/2"-12 x 2.000	1 1/2"-12 x 3.000	2.374		.750	1.500																1.875	3.000	7.594
	2.000	1 1/2"-12 x 2.250	2"-12 x 2.250	1 3/4"-12 x 2.250	1 3/4"-12 x 3.500	2.624		.875	1.688																2.000	3.125	7.719
	2.500	1 7/8"-12 x 3.000	2 1/2"-12 x 3.000	2 1/4"-12 x 3.000	2 1/4"-12 x 4.500	3.124		1.000	2.062																2.250	3.375	7.969
	3.000	2 1/4"-12 x 3.500	3"-12 x 3.500	2 3/4"-12 x 3.500	2 3/4"-12 x 5.500	3.749		1.000	2.625																2.250	3.375	7.969
	3.500	2 1/2"-12 x 3.500	3 1/2"-12 x 3.500	3 1/4"-12 x 3.500	3 1/4"-12 x 6.500	4.249		1.000	3.000																2.250	3.375	7.969
	4.000	3"-12 x 4.000	4"-12 x 4.000	3 3/4"-12 x 4.000	3 3/4"-12 x 7.500	4.749		1.000	3.375																2.250	3.375	7.969
BORE	MM	KM & KF	KD	KI	KA	B	BB	C	D	DD	E	EE	F	G	J	K	KB	KC	KN	LB	OD	P	R	TR	WB	Y	ZB

1.08

FILE: 1.08_MH8S2.dwg REV: 02/09/2010

27650 Groesbeck Hwy • Roseville, MI 48066-2759 • Phone 586.775.7211 • Fax 586.775.4545 • Toll Free 800.526.7968 • e-mail: sales@peninsularcylinders.com • www.peninsularcylinders.com

HEAD TIE ROD EXTENDED

Peninsular Mounting Style: **MH 8**

Heavy Duty Steel Air Cylinder

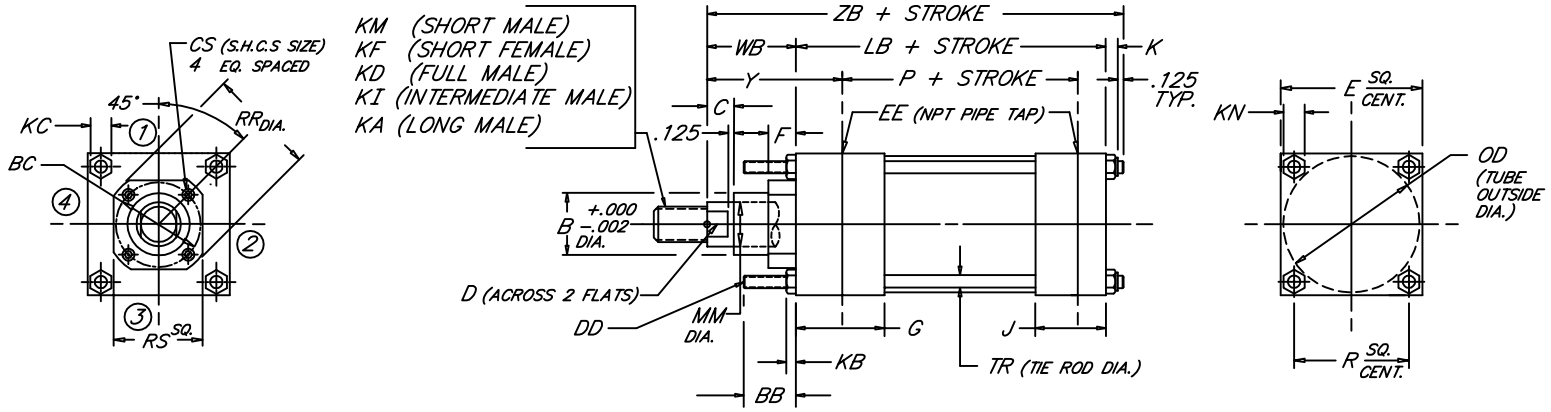

BORE	ROD MM	ROD THREAD X LENGTH KM & KF	KD	KI	KA	B	BB	BC	C	CS	D	DD	E	NPT EE	F	G	J	K	KB	KC	KN	LB	OD	P	R	RR	RS	TR	WB	Y	ZB
8.000	1.375	1"-14 x 1.625	1 3/8"-12 x 1.625	1 1/4"-12 x 1.625	1 1/4"-12 x 2.500	1.999	2.312	3.267	.625	.312	1.125	5/8"-18	8.500	3/4	.625	2.000	1.500	.750	.531	.938	.938	5.125	8.450	3.375	6.435	3.734	3.000	.625	1.625	2.750	7.625
	1.750	1 1/4"-12 x 2.000	1 3/4"-12 x 2.000	1 1/2"-12 x 2.000	1 1/2"-12 x 3.000	2.374		3.267	.750	.312	1.500															3.734	3.000		1.875	3.000	7.875
	2.000	1 1/2"-12 x 2.250	2"-12 x 2.250	1 3/4"-12 x 2.250	1 3/4"-12 x 3.500	2.624		3.812	.875	.312	1.688															4.312	3.750		2.000	3.125	8.000
	2.500	1 7/8"-12 x 3.000	2 1/2"-12 x 3.000	2 1/4"-12 x 3.000	2 1/4"-12 x 4.500	3.124		3.812	1.000	.312	2.062															4.312	3.750		2.250	3.375	8.250
	3.000	2 1/4"-12 x 3.500	3"-12 x 3.500	2 3/4"-12 x 3.500	2 3/4"-12 x 5.500	3.749		4.700	1.000	.375	2.625															5.562	4.500		2.250	3.375	8.250
	3.500	2 1/2"-12 x 3.500	3 1/2"-12 x 3.500	3 1/4"-12 x 3.500	3 1/4"-12 x 6.500	4.249		5.200	1.000	.375	3.000															6.062	5.000		2.250	3.375	8.250
	4.000	3"-12 x 4.000	4"-12 x 4.000	3 3/4"-12 x 4.000	3 3/4"-12 x 7.500	4.749		5.700	1.000	.375	3.375															6.562	5.500		2.250	3.375	8.250
	4.500	3 1/4"-12 x 4.500	4 1/2"-12 x 4.500	4 1/4"-12 x 4.500	4 1/4"-12 x 8.250	5.249		6.200	1.000	.375	3.875															7.062	6.000		2.250	3.375	8.250
	5.000	3 1/2"-12 x 5.000	5"-12 x 5.000	4 3/4"-12 x 5.000	4 3/4"-12 x 9.000	5.749		6.700	1.000	.375	4.250															7.562	6.500		2.250	3.375	8.250
	5.500	4"-12 x 5.500	5 1/2"-12 x 5.500	5 1/4"-12 x 5.500	5 1/4"-12 x 10.000	6.249		7.125	1.000	.375	4.625															7.938	7.000		2.250	3.375	8.250
10.000	1.750	1 1/4"-12 x 2.000	1 3/4"-12 x 2.000	1 1/2"-12 x 2.000	1 1/2"-12 x 3.000	2.374	2.688	3.812	.750	.312	1.500	3/4"-16	10.625	1	.625	2.250	2.000	.875	.625	1.094	1.062	6.375	10.450	4.250	7.920	4.312	3.750	.750	1.875	3.062	9.250
	2.000	1 1/2"-12 x 2.250	2"-12 x 2.250	1 3/4"-12 x 2.250	1 3/4"-12 x 3.500	2.624		3.812	.875	.312	1.688															4.312	3.750		2.000	3.187	9.375
	2.500	1 7/8"-12 x 3.000	2 1/2"-12 x 3.000	2 1/4"-12 x 3.000	2 1/4"-12 x 4.500	3.124		3.812	1.000	.312	2.062															4.312	3.750		2.250	3.437	9.625
	3.000	2 1/4"-12 x 3.500	3"-12 x 3.500	2 3/4"-12 x 3.500	2 3/4"-12 x 5.500	3.749		4.700	1.000	.375	2.625															5.562	4.500		2.250	3.437	9.625
	3.500	2 1/2"-12 x 3.500	3 1/2"-12 x 3.500	3 1/4"-12 x 3.500	3 1/4"-12 x 6.500	4.249		5.200	1.000	.375	3.000															6.062	5.000		2.250	3.437	9.625
	4.000	3"-12 x 4.000	4"-12 x 4.000	3 3/4"-12 x 4.000	3 3/4"-12 x 7.500	4.749		5.700	1.000	.375	3.375															6.562	5.500		2.250	3.437	9.625
	4.500	3 1/4"-12 x 4.500	4 1/2"-12 x 4.500	4 1/4"-12 x 4.500	4 1/4"-12 x 8.250	5.249		6.200	1.000	.375	3.875															7.062	6.000		2.250	3.437	9.625
	5.000	3 1/2"-12 x 5.000	5"-12 x 5.000	4 3/4"-12 x 5.000	4 3/4"-12 x 9.000	5.749		6.700	1.000	.375	4.250															7.562	6.500		2.250	3.437	9.625
	5.500	4"-12 x 5.500	5 1/2"-12 x 5.500	5 1/4"-12 x 5.500	5 1/4"-12 x 10.000	6.249		7.125	1.000	.375	4.625															7.938	7.000		2.250	3.437	9.625
12.000	2.000	1 1/2"-12 x 2.250	2"-12 x 2.250	1 3/4"-12 x 2.250	1 3/4"-12 x 3.500	2.624	2.688	3.812	.875	.312	1.688	3/4"-16	12.750	1	.625	2.250	2.000	.875	.625	1.094	1.062	6.875	12.450	4.750	9.405	4.312	3.750	.750	2.000	3.187	9.875
	2.500	1 7/8"-12 x 3.000	2 1/2"-12 x 3.000	2 1/4"-12 x 3.000	2 1/4"-12 x 4.500	3.124		3.812	1.000	.312	2.062															4.312	3.750		2.250	3.437	10.125
	3.000	2 1/4"-12 x 3.500	3"-12 x 3.500	2 3/4"-12 x 3.500	2 3/4"-12 x 5.500	3.749		4.700	1.000	.375	2.625															5.562	4.500		2.250	3.437	10.125
	3.500	2 1/2"-12 x 3.500	3 1/2"-12 x 3.500	3 1/4"-12 x 3.500	3 1/4"-12 x 6.500	4.249		5.200	1.000	.375	3.000															6.062	5.000		2.250	3.437	10.125
	4.000	3"-12 x 4.000	4"-12 x 4.000	3 3/4"-12 x 4.000	3 3/4"-12 x 7.500	4.749		5.700	1.000	.375	3.375															6.562	5.500		2.250	3.437	10.125
	4.500	3 1/4"-12 x 4.500	4 1/2"-12 x 4.500	4 1/4"-12 x 4.500	4 1/4"-12 x 8.250	5.249		6.200	1.000	.375	3.875															7.062	6.000		2.250	3.437	10.125
	5.000	3 1/2"-12 x 5.000	5"-12 x 5.000	4 3/4"-12 x 5.000	4 3/4"-12 x 9.000	5.749		6.700	1.000	.375	4.250															7.562	6.500		2.250	3.437	10.125
	5.500	4"-12 x 5.500	5 1/2"-12 x 5.500	5 1/4"-12 x 5.500	5 1/4"-12 x 10.000	6.249		7.125	1.000	.375	4.625															7.938	7.000		2.250	3.437	10.125
14.000	2.500	1 7/8"-12 x 3.000	2 1/2"-12 x 3.000	2 1/4"-12 x 3.000	2 1/4"-12 x 4.500	3.124	3.188	3.812		.312	2.062	7/8"-14	14.750	1 1/4	.625	2.750	2.250	1.000	.750	1.281	1.250	8.125	14.450	5.625	10.889	4.312	3.750	.875	2.250	3.688	11.500
	3.000	2 1/4"-12 x 3.500	3"-12 x 3.500	2 3/4"-12 x 3.500	2 3/4"-12 x 5.500	3.749		4.700		.375	2.625															5.562	4.500				
	3.500	2 1/2"-12 x 3.500	3 1/2"-12 x 3.500	3 1/4"-12 x 3.500	3 1/4"-12 x 6.500	4.249		5.200		.375	3.000															6.062	5.000				
	4.000	3"-12 x 4.000	4"-12 x 4.000	3 3/4"-12 x 4.000	3 3/4"-12 x 7.500	4.749		5.700	1.000	.375	3.375															6.562	5.500				
	4.500	3 1/4"-12 x 4.500	4 1/2"-12 x 4.500	4 1/4"-12 x 4.500	4 1/4"-12 x 8.250	5.249		6.200		.375	3.875															7.062	6.000				
	5.000	3 1/2"-12 x 5.000	5"-12 x 5.000	4 3/4"-12 x 5.000	4 3/4"-12 x 9.000	5.749		6.700		.375	4.250															7.562	6.500				
	5.500	4"-12 x 5.500	5 1/2"-12 x 5.500	5 1/4"-12 x 5.500	5 1/4"-12 x 10.000	6.249		7.125		.375	4.625															7.938	7.000				
BORE	MM	KM & KF	KD	KI	KA	B	BB	BC	C	CS	D	DD	E	EE	F	G	J	K	KB	KC	KN	LB	OD	P	R	RR	RS	TR	WB	Y	ZB

FILE: 1.08_MH8L2.dwg REV: 02/09/2010

27650 Groesbeck Hwy • Roseville, MI 48066-2759 • Phone 586.775.7211 • Fax 586.775.4545 • Toll Free 800.526.7968 • e-mail: sales@peninsularcylinders.com • www.peninsularcylinders.com

CAP TIE ROD EXTENDED

Heavy Duty Steel Air Cylinder

Peninsular Mounting Style: **MH 11**

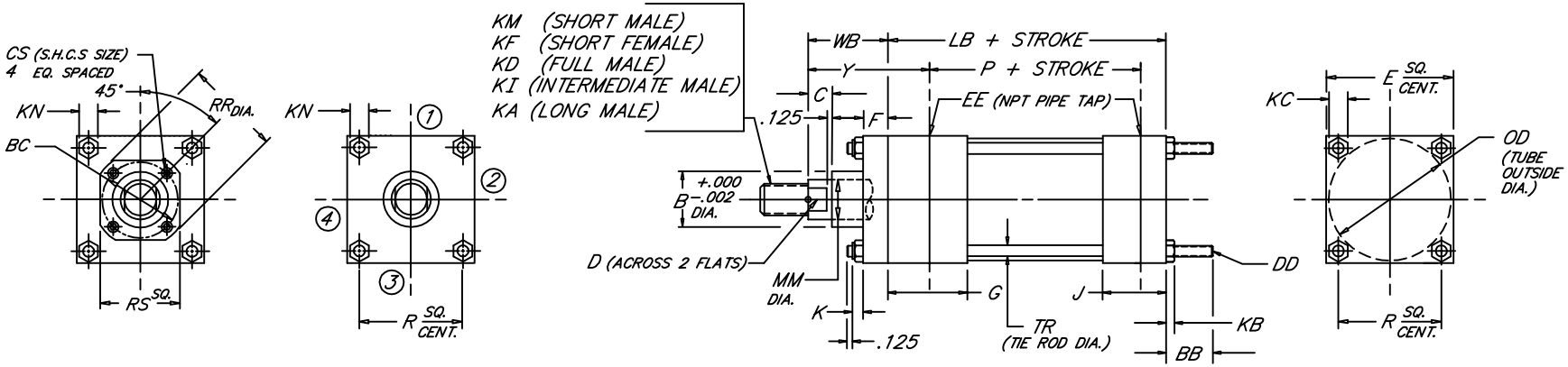

BORE	ROD MM	ROD THREAD X LENGTH KM & KF	KD	KI	KA	B	BB	BC	C	CS	D	DD	E	NPT EE	F	G	J	K	KB	KC	KN	LB	OD	P	R	RR	RS	TR	WB	Y
1.500	.625	7/16"-20 x .750	5/8"-18 x .750	1/2"-20 x .750	1/2"-20 x 1.125	1.124	1.000	---	.375	---	.500	1/4"-28	2.000	3/8	.375	1.500	1.000	.312	.218	.438	.438	3.625	1.750	2.335	1.428	---	---	.250	1.000	1.875
	1.000	3/4"-16 x 1.125	1"-14 x 1.125	7/8"-14 x 1.125	7/8"-14 x 1.875	1.499			.500		.875																		1.375	2.250
2.000	.625	7/16"-20 x .750	5/8"-18 x .750	1/2"-20 x .750	1/2"-20 x 1.125	1.124	1.125	---	.375	---	.500	5/16"-24	2.500	3/8	.375	1.500	1.000	.344	.250	.500	.500	3.625	2.250	2.335	1.838	---	---	.312	1.000	1.875
	1.000	3/4"-16 x 1.125	1"-14 x 1.125	7/8"-14 x 1.125	7/8"-14 x 1.875	1.499			.500		.875																		1.375	2.250
	1.375	1"-14 x 1.625	1 3/8"-12 x 1.625	1 1/4"-12 x 1.625	1 1/4"-12 x 2.500	1.999			.625		1.125																		1.625	2.500
2.500	.625	7/16"-20 x .750	5/8"-18 x .750	1/2"-20 x .750	1/2"-20 x 1.125	1.124	1.125	---	.375	---	.500	5/16"-24	3.000	3/8	.375	1.500	1.000	.344	.250	.500	.500	3.750	2.750	2.460	2.192	---	---	.312	1.000	1.875
	1.000	3/4"-16 x 1.125	1"-14 x 1.125	7/8"-14 x 1.125	7/8"-14 x 1.875	1.499			.500		.875																		1.375	2.250
	1.375	1"-14 x 1.625	1 3/8"-12 x 1.625	1 1/4"-12 x 1.625	1 1/4"-12 x 2.500	1.999			.625		1.125																		1.625	2.500
	1.750	1 1/4"-12 x 2.000	1 3/4"-12 x 2.000	1 1/2"-12 x 2.000	1 1/2"-12 x 3.000	2.374			.750		1.500																		1.875	2.750
3.250	1.000	3/4"-16 x 1.125	1"-14 x 1.125	7/8"-14 x 1.125	7/8"-14 x 1.875	1.499	1.375	---	.500	---	.875	3/8"-24	3.750	1/2	.625	1.750	1.250	.438	.328	.562	.562	4.250	3.500	2.750	2.758	---	---	.375	1.375	2.375
	1.375	1"-14 x 1.625	1 3/8"-12 x 1.625	1 1/4"-12 x 1.625	1 1/4"-12 x 2.500	1.999			.625		1.125																		1.625	2.625
	1.750	1 1/4"-12 x 2.000	1 3/4"-12 x 2.000	1 1/2"-12 x 2.000	1 1/2"-12 x 3.000	2.374			.750		1.500																		1.875	2.875
	2.000	1 1/2"-12 x 2.250	2"-12 x 2.250	1 3/4"-12 x 2.250	1 3/4"-12 x 3.500	2.624			.875		1.688																		2.000	3.000
4.000	1.000	3/4"-16 x 1.125	1"-14 x 1.125	7/8"-14 x 1.125	7/8"-14 x 1.875	1.499	1.375	2.562	.500	.250	.875	3/8"-24	4.500	1/2	.625	1.750	1.250	.438	.328	.562	.562	4.250	4.250	2.750	3.323	2.969	2.500	.375	1.375	2.375
	1.375	1"-14 x 1.625	1 3/8"-12 x 1.625	1 1/4"-12 x 1.625	1 1/4"-12 x 2.500	1.999		2.562	.625	.250	1.125															2.969	2.500		1.625	2.625
	1.750	1 1/4"-12 x 2.000	1 3/4"-12 x 2.000	1 1/2"-12 x 2.000	1 1/2"-12 x 3.000	2.374		3.267	.750	.312	1.500															3.734	3.000		1.875	2.875
	2.000	1 1/2"-12 x 2.250	2"-12 x 2.250	1 3/4"-12 x 2.250	1 3/4"-12 x 3.500	2.624		---	.875	---	1.688															---	---		2.000	3.000
	2.500	1 7/8"-12 x 3.000	2 1/2"-12 x 3.000	2 1/4"-12 x 3.000	2 1/4"-12 x 4.500	3.124		---	1.000	---	2.062															---	---		2.250	3.250
5.000	1.000	3/4"-16 x 1.125	1"-14 x 1.125	7/8"-14 x 1.125	7/8"-14 x 1.875	1.499	1.812	2.562	.500	.250	.875	1/2"-20	5.500	1/2	.625	1.750	1.250	.594	.438	.750	.750	4.500	5.250	3.000	4.101	2.969	2.500	.500	1.375	2.375
	1.375	1"-14 x 1.625	1 3/8"-12 x 1.625	1 1/4"-12 x 1.625	1 1/4"-12 x 2.500	1.999		2.562	.625	.250	1.125															2.969	2.500		1.625	2.625
	1.750	1 1/4"-12 x 2.000	1 3/4"-12 x 2.000	1 1/2"-12 x 2.000	1 1/2"-12 x 3.000	2.374		3.267	.750	.312	1.500															3.734	3.000		1.875	2.875
	2.000	1 1/2"-12 x 2.250	2"-12 x 2.250	1 3/4"-12 x 2.250	1 3/4"-12 x 3.500	2.624		3.812	.875	.312	1.688															4.312	3.750		2.000	3.000
	2.500	1 7/8"-12 x 3.000	2 1/2"-12 x 3.000	2 1/4"-12 x 3.000	2 1/4"-12 x 4.500	3.124		3.812	1.000	.312	2.062															4.312	3.750		2.250	3.250
	3.000	2 1/4"-12 x 3.500	3"-12 x 3.500	2 3/4"-12 x 3.500	2 3/4"-12 x 5.500	3.749		---	1.000	---	2.625															---	---		2.250	3.250
	3.500	2 1/2"-12 x 3.500	3 1/2"-12 x 3.500	3 1/4"-12 x 3.500	3 1/4"-12 x 6.500	4.249		---	1.000	---	3.000															---	---		2.250	3.250
6.000	1.375	1"-14 x 1.625	1 3/8"-12 x 1.625	1 1/4"-12 x 1.625	1 1/4"-12 x 2.500	1.999	1.812	3.267	.625	.312	1.125	1/2"-20	6.500	3/4	.625	2.000	1.500	.594	.438	.750	.750	5.000	6.250	3.250	4.879	3.734	3.000	.500	1.625	2.750
	1.750	1 1/4"-12 x 2.000	1 3/4"-12 x 2.000	1 1/2"-12 x 2.000	1 1/2"-12 x 3.000	2.374		3.267	.750	.312	1.500				.625											3.734	3.000		1.875	3.000
	2.000	1 1/2"-12 x 2.250	2"-12 x 2.250	1 3/4"-12 x 2.250	1 3/4"-12 x 3.500	2.624		3.812	.875	.312	1.688				.625											4.312	3.750		2.000	3.125
	2.500	1 7/8"-12 x 3.000	2 1/2"-12 x 3.000	2 1/4"-12 x 3.000	2 1/4"-12 x 4.500	3.124		3.812	1.000	.312	2.062				.625											4.312	3.750		2.250	3.375
	3.000	2 1/4"-12 x 3.500	3"-12 x 3.500	2 3/4"-12 x 3.500	2 3/4"-12 x 5.500	3.749		4.700	1.000	.375	2.625				.625											5.562	4.500		2.250	3.375
	3.500	2 1/2"-12 x 3.500	3 1/2"-12 x 3.500	3 1/4"-12 x 3.500	3 1/4"-12 x 6.500	4.249		5.200	1.000	.375	3.000				.625											6.062	5.000		2.250	3.375
	4.000	3"-12 x 4.000	4"-12 x 4.000	3 3/4"-12 x 4.000	3 3/4"-12 x 7.500	4.749		---	1.000	---	3.375				.750											---	---		2.250	3.375
BORE	MM	KM & KF	KD	KI	KA	B	BB	BC	C	CS	D	DD	E	EE	F	G	J	K	KB	KC	KN	LB	OD	P	R	RR	RS	TR	WB	Y

FILE: 1.11_MH11S2.dwg REV: 2/09/2010

27650 Groesbeck Hwy • Roseville, MI 48066-2759 • Phone 586.775.7211 • Fax 586.775.4545 • Toll Free 800.526.7968 • e-mail: sales@peninsularcylinders.com • www.peninsularcylinders.com

CAP TIE ROD EXTENDED

Heavy Duty Steel Air Cylinder

Peninsular Mounting Style: **MH 11**

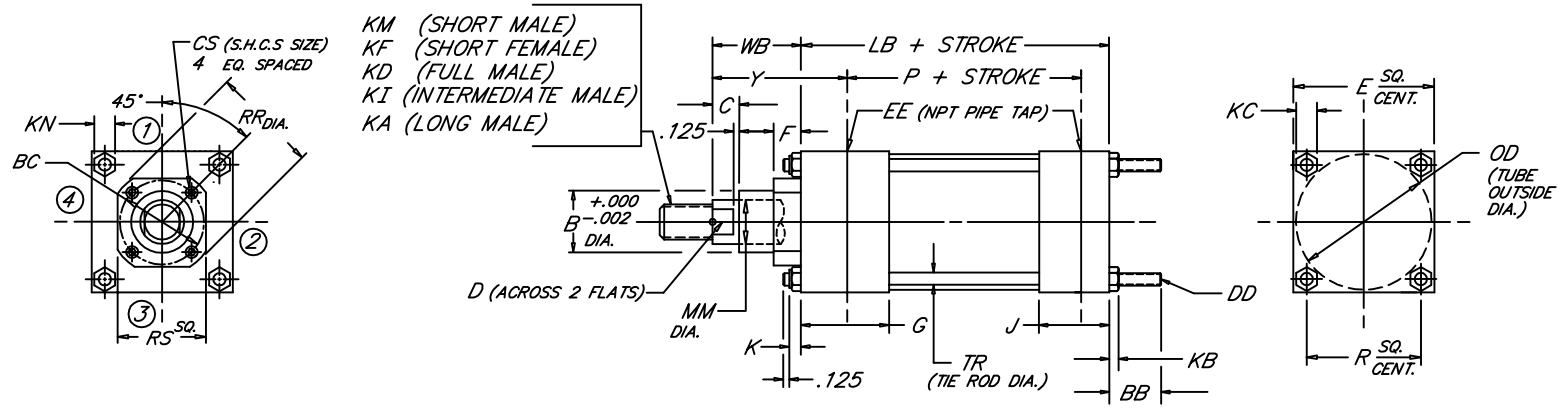

BORE	MM	ROD: KM & KF	ROD THREAD X LENGTH: KD	KI	KA	B	BB	BC	C	CS	D	DD	E	NPT: EE	F	G	J	K	KB	KC	KN	LB	OD	P	R	RR	RS	TR	WB	Y
8.000	1.375	1"-14 x 1.625	1 3/8"-12 x 1.625	1 1/4"-12 x 1.625	1 1/4"-12 x 2.500	1.999	2.312	3.267	.625	.312	1.125	5/8"-18	8.500	3/4	.625	2.000	1.500	.750	.531	.938	.938	5.125	8.450	3.375	6.435	3.734	3.000	.625	1.625	2.750
	1.750	1 1/4"-12 x 2.000	1 3/4"-12 x 2.000	1 1/2"-12 x 2.000	1 1/2"-12 x 3.000	2.374		3.267	.750	.312	1.500															3.734	3.000		1.875	3.000
	2.000	1 1/2"-12 x 2.250	2"-12 x 2.250	1 3/4"-12 x 2.250	1 3/4"-12 x 3.500	2.624		3.812	.875	.312	1.688															4.312	3.750		2.000	3.125
	2.500	1 7/8"-12 x 3.000	2 1/2"-12 x 3.000	2 1/4"-12 x 3.000	2 1/4"-12 x 4.500	3.124		3.812	1.000	.312	2.062															4.312	3.750		2.250	3.375
	3.000	2 1/4"-12 x 3.500	3"-12 x 3.500	2 3/4"-12 x 3.500	2 3/4"-12 x 5.500	3.749		4.700	1.000	.375	2.625															5.562	4.500		2.250	3.375
	3.500	2 1/2"-12 x 3.500	3 1/2"-12 x 3.500	3 1/4"-12 x 3.500	3 1/4"-12 x 6.500	4.249		5.200	1.000	.375	3.000															6.062	5.000		2.250	3.375
	4.000	3"-12 x 4.000	4"-12 x 4.000	3 3/4"-12 x 4.000	3 3/4"-12 x 7.500	4.749		5.700	1.000	.375	3.375															6.562	5.500		2.250	3.375
	4.500	3 1/4"-12 x 4.500	4 1/2"-12 x 4.500	4 1/4"-12 x 4.500	4 1/4"-12 x 8.250	5.249		6.200	1.000	.375	3.875															7.062	6.000		2.250	3.375
	5.000	3 1/2"-12 x 5.000	5"-12 x 5.000	4 3/4"-12 x 5.000	4 3/4"-12 x 9.000	5.749		6.700	1.000	.375	4.250															7.562	6.500		2.250	3.375
	5.500	4"-12 x 5.500	5 1/2"-12 x 5.500	5 1/4"-12 x 5.500	5 1/4"-12 x 10.000	6.249		7.125	1.000	.375	4.625															7.938	7.000		2.250	3.375
10.000	1.750	1 1/4"-12 x 2.000	1 3/4"-12 x 2.000	1 1/2"-12 x 2.000	1 1/2"-12 x 3.000	2.374	2.688	3.812	.750	.312	1.500	3/4"-16	10.625	1	.625	2.250	2.000	.875	.625	1.094	1.062	6.375	10.450	4.250	7.920	4.312	3.750	.750	1.875	3.062
	2.000	1 1/2"-12 x 2.250	2"-12 x 2.250	1 3/4"-12 x 2.250	1 3/4"-12 x 3.500	2.624		3.812	.875	.312	1.688															4.312	3.750		2.000	3.187
	2.500	1 7/8"-12 x 3.000	2 1/2"-12 x 3.000	2 1/4"-12 x 3.000	2 1/4"-12 x 4.500	3.124		3.812	1.000	.312	2.062															4.312	3.750		2.250	3.437
	3.000	2 1/4"-12 x 3.500	3"-12 x 3.500	2 3/4"-12 x 3.500	2 3/4"-12 x 5.500	3.749		4.700	1.000	.375	2.625															5.562	4.500		2.250	3.437
	3.500	2 1/2"-12 x 3.500	3 1/2"-12 x 3.500	3 1/4"-12 x 3.500	3 1/4"-12 x 6.500	4.249		5.200	1.000	.375	3.000															6.062	5.000		2.250	3.437
	4.000	3"-12 x 4.000	4"-12 x 4.000	3 3/4"-12 x 4.000	3 3/4"-12 x 7.500	4.749		5.700	1.000	.375	3.375															6.562	5.500		2.250	3.437
	4.500	3 1/4"-12 x 4.500	4 1/2"-12 x 4.500	4 1/4"-12 x 4.500	4 1/4"-12 x 8.250	5.249		6.200	1.000	.375	3.875															7.062	6.000		2.250	3.437
	5.000	3 1/2"-12 x 5.000	5"-12 x 5.000	4 3/4"-12 x 5.000	4 3/4"-12 x 9.000	5.749		6.700	1.000	.375	4.250															7.562	6.500		2.250	3.437
	5.500	4"-12 x 5.500	5 1/2"-12 x 5.500	5 1/4"-12 x 5.500	5 1/4"-12 x 10.000	6.249		7.125	1.000	.375	4.625															7.938	7.000		2.250	3.437
12.000	2.000	1 1/2"-12 x 2.250	2"-12 x 2.250	1 3/4"-12 x 2.250	1 3/4"-12 x 3.500	2.624	2.688	3.812	.875	.312	1.688	3/4"-16	12.750	1	.625	2.250	2.000	.875	.625	1.094	1.062	6.875	12.450	4.750	9.405	4.312	3.750	.750	2.000	3.187
	2.500	1 7/8"-12 x 3.000	2 1/2"-12 x 3.000	2 1/4"-12 x 3.000	2 1/4"-12 x 4.500	3.124		3.812	1.000	.312	2.062															4.312	3.750		2.250	3.437
	3.000	2 1/4"-12 x 3.500	3"-12 x 3.500	2 3/4"-12 x 3.500	2 3/4"-12 x 5.500	3.749		4.700	1.000	.375	2.625															5.562	4.500		2.250	3.437
	3.500	2 1/2"-12 x 3.500	3 1/2"-12 x 3.500	3 1/4"-12 x 3.500	3 1/4"-12 x 6.500	4.249		5.200	1.000	.375	3.000															6.062	5.000		2.250	3.437
	4.000	3"-12 x 4.000	4"-12 x 4.000	3 3/4"-12 x 4.000	3 3/4"-12 x 7.500	4.749		5.700	1.000	.375	3.375															6.562	5.500		2.250	3.437
	4.500	3 1/4"-12 x 4.500	4 1/2"-12 x 4.500	4 1/4"-12 x 4.500	4 1/4"-12 x 8.250	5.249		6.200	1.000	.375	3.875															7.062	6.000		2.250	3.437
	5.000	3 1/2"-12 x 5.000	5"-12 x 5.000	4 3/4"-12 x 5.000	4 3/4"-12 x 9.000	5.749		6.700	1.000	.375	4.250															7.562	6.500		2.250	3.437
	5.500	4"-12 x 5.500	5 1/2"-12 x 5.500	5 1/4"-12 x 5.500	5 1/4"-12 x 10.000	6.249		7.125	1.000	.375	4.625															7.938	7.000		2.250	3.437
14.000	2.500	1 7/8"-12 x 3.000	2 1/2"-12 x 3.000	2 1/4"-12 x 3.000	2 1/4"-12 x 4.500	3.124	3.188	3.812		.312	2.062	7/8"-14	14.750	1 1/4	.625	2.750	2.250	1.000	.750	1.281	1.250	8.125	14.450	5.625	10.889	4.312	3.750	.875		
	3.000	2 1/4"-12 x 3.500	3"-12 x 3.500	2 3/4"-12 x 3.500	2 3/4"-12 x 5.500	3.749		4.700		.375	2.625															5.562	4.500			
	3.500	2 1/2"-12 x 3.500	3 1/2"-12 x 3.500	3 1/4"-12 x 3.500	3 1/4"-12 x 6.500	4.249		5.200		.375	3.000															6.062	5.000			
	4.000	3"-12 x 4.000	4"-12 x 4.000	3 3/4"-12 x 4.000	3 3/4"-12 x 7.500	4.749		5.700	1.000	.375	3.375															6.562	5.500		2.250	3.688
	4.500	3 1/4"-12 x 4.500	4 1/2"-12 x 4.500	4 1/4"-12 x 4.500	4 1/4"-12 x 8.250	5.249		6.200		.375	3.875															7.062	6.000			
	5.000	3 1/2"-12 x 5.000	5"-12 x 5.000	4 3/4"-12 x 5.000	4 3/4"-12 x 9.000	5.749		6.700		.375	4.250															7.562	6.500			
	5.500	4"-12 x 5.500	5 1/2"-12 x 5.500	5 1/4"-12 x 5.500	5 1/4"-12 x 10.000	6.249		7.125		.375	4.625															7.938	7.000			
BORE	MM	KM & KF	KD	KI	KA	B	BB	BC	C	CS	D	DD	E	EE	F	G	J	K	KB	KC	KN	LB	OD	P	R	RR	RS	TR	WB	Y

FILE: 1.11_MH11L2.dwg REV: 2/09/2010

27650 Groesbeck Hwy • Roseville, MI 48066-2759 • Phone 586.775.7211 • Fax 586.775.4545 • Toll Free 800.526.7968 • e-mail: sales@peninsularcylinders.com • www.peninsularcylinders.com

HEAD & CAP TIE ROD EXTENDED

Peninsular Mounting Style: **MH 12**

Heavy Duty Steel Air Cylinder

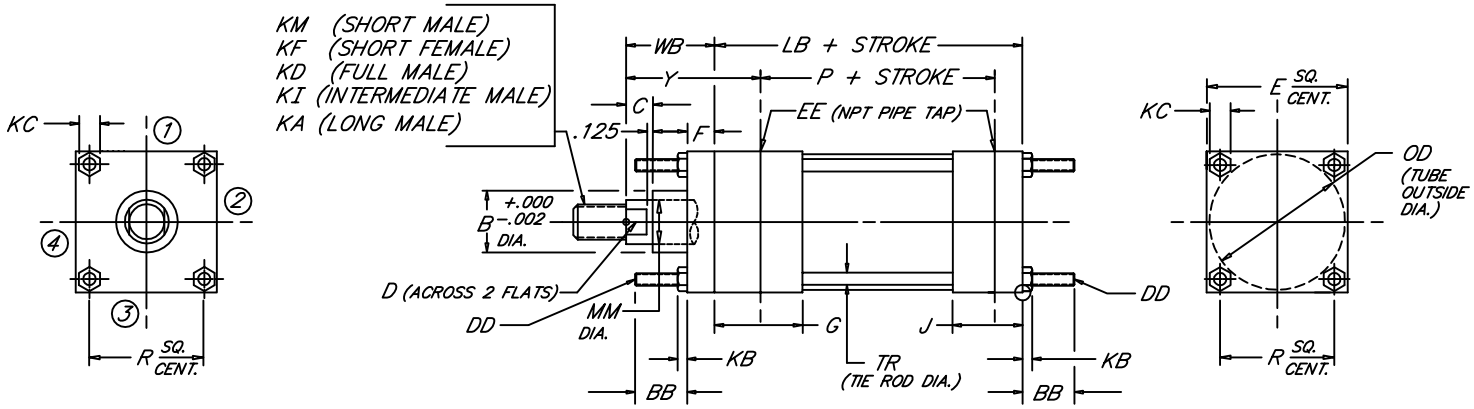

BORE	ROD MM	ROD THREAD X LENGTH KM & KF	KD	KI	KA	B	BB	C	D	DD	E	NPT EE	F	G	J	KB	KC	LB	OD	P	R	TR	WB	Y
1.500	.625	7/16"-20 x .750	5/8"-18 x .750	1/2"-20 x .750	1/2"-20 x 1.125	1.124	1.000	.375	.500	1/4"-28	2.000	3/8	.375	1.500	1.000	.218	.438	3.625	1.750	2.335	1.428	.250	1.000	1.875
	1.000	3/4"-16 x 1.125	1"-14 x 1.125	7/8"-14 x 1.125	7/8"-14 x 1.875	1.499		.500	.875														1.375	2.250
2.000	.625	7/16"-20 x .750	5/8"-18 x .750	1/2"-20 x .750	1/2"-20 x 1.125	1.124	1.125	.375	.500	5/16"-24	2.500	3/8	.375	1.500	1.000	.250	.500	3.625	2.250	2.335	1.838	.312	1.000	1.875
	1.000	3/4"-16 x 1.125	1"-14 x 1.125	7/8"-14 x 1.125	7/8"-14 x 1.875	1.499		.500	.875														1.375	2.250
	1.375	1"-14 x 1.625	1 3/8"-12 x 1.625	1 1/4"-12 x 1.625	1 1/4"-12 x 2.500	1.999		.625	1.125														1.625	2.500
2.500	.625	7/16"-20 x .750	5/8"-18 x .750	1/2"-20 x .750	1/2"-20 x 1.125	1.124	1.125	.375	.500	5/16"-24	3.000	3/8	.375	1.500	1.000	.250	.500	3.750	2.750	2.460	2.192	.312	1.000	1.875
	1.000	3/4"-16 x 1.125	1"-14 x 1.125	7/8"-14 x 1.125	7/8"-14 x 1.875	1.499		.500	.875														1.375	2.250
	1.375	1"-14 x 1.625	1 3/8"-12 x 1.625	1 1/4"-12 x 1.625	1 1/4"-12 x 2.500	1.999		.625	1.125														1.625	2.500
	1.750	1 1/4"-12 x 2.000	1 3/4"-12 x 2.000	1 1/2"-12 x 2.000	1 1/2"-12 x 3.000	2.374		.750	1.500														1.875	2.750
3.250	1.000	3/4"-16 x 1.125	1"-14 x 1.125	7/8"-14 x 1.125	7/8"-14 x 1.875	1.499	1.375	.500	.875	3/8"-24	3.750	1/2	.625	1.750	1.250	.328	.562	4.250	3.500	2.750	2.758	.375	1.375	2.375
	1.375	1"-14 x 1.625	1 3/8"-12 x 1.625	1 1/4"-12 x 1.625	1 1/4"-12 x 2.500	1.999		.625	1.125														1.625	2.625
	1.750	1 1/4"-12 x 2.000	1 3/4"-12 x 2.000	1 1/2"-12 x 2.000	1 1/2"-12 x 3.000	2.374		.750	1.500														1.875	2.875
	2.000	1 1/2"-12 x 2.250	2"-12 x 2.250	1 3/4"-12 x 2.250	1 3/4"-12 x 3.500	2.624		.875	1.688														2.000	3.000
4.000	1.000	3/4"-16 x 1.125	1"-14 x 1.125	7/8"-14 x 1.125	7/8"-14 x 1.875	1.499	1.375	.500	.875	3/8"-24	4.500	1/2	.625	1.750	1.250	.328	.562	4.250	4.250	2.750	3.323	.375	1.375	2.375
	1.375	1"-14 x 1.625	1 3/8"-12 x 1.625	1 1/4"-12 x 1.625	1 1/4"-12 x 2.500	1.999		.625	1.125														1.625	2.625
	1.750	1 1/4"-12 x 2.000	1 3/4"-12 x 2.000	1 1/2"-12 x 2.000	1 1/2"-12 x 3.000	2.374		.750	1.500														1.875	2.875
	2.000	1 1/2"-12 x 2.250	2"-12 x 2.250	1 3/4"-12 x 2.250	1 3/4"-12 x 3.500	2.624		.875	1.688														2.000	3.000
	2.500	1 7/8"-12 x 3.000	2 1/2"-12 x 3.000	2 1/4"-12 x 3.000	2 1/4"-12 x 4.500	3.124		1.000	2.062														2.250	3.250
5.000	1.000	3/4"-16 x 1.125	1"-14 x 1.125	7/8"-14 x 1.125	7/8"-14 x 1.875	1.499	1.812	.500	.875	1/2"-20	5.500	1/2	.625	1.750	1.250	.438	.750	4.500	5.250	3.000	4.101	.500	1.375	2.375
	1.375	1"-14 x 1.625	1 3/8"-12 x 1.625	1 1/4"-12 x 1.625	1 1/4"-12 x 2.500	1.999		.625	1.125														1.625	2.625
	1.750	1 1/4"-12 x 2.000	1 3/4"-12 x 2.000	1 1/2"-12 x 2.000	1 1/2"-12 x 3.000	2.374		.750	1.500														1.875	2.875
	2.000	1 1/2"-12 x 2.250	2"-12 x 2.250	1 3/4"-12 x 2.250	1 3/4"-12 x 3.500	2.624		.875	1.688														2.000	3.000
	2.500	1 7/8"-12 x 3.000	2 1/2"-12 x 3.000	2 1/4"-12 x 3.000	2 1/4"-12 x 4.500	3.124		1.000	2.062														2.250	3.250
	3.000	2 1/4"-12 x 3.500	3"-12 x 3.500	2 3/4"-12 x 3.500	2 3/4"-12 x 5.500	3.749		1.000	2.625														2.250	3.250
	3.500	2 1/2"-12 x 3.500	3 1/2"-12 x 3.500	3 1/4"-12 x 3.500	3 1/4"-12 x 6.500	4.249		1.000	3.000														2.250	3.250
6.000	1.375	1"-14 x 1.625	1 3/8"-12 x 1.625	1 1/4"-12 x 1.625	1 1/4"-12 x 2.500	1.999	1.812	.625	1.125	1/2"-20	6.500	3/4	.750	2.000	1.500	.438	.750	5.000	6.250	3.250	4.879	.500	1.625	2.750
	1.750	1 1/4"-12 x 2.000	1 3/4"-12 x 2.000	1 1/2"-12 x 2.000	1 1/2"-12 x 3.000	2.374		.750	1.500														1.875	3.000
	2.000	1 1/2"-12 x 2.250	2"-12 x 2.250	1 3/4"-12 x 2.250	1 3/4"-12 x 3.500	2.624		.875	1.688														2.000	3.125
	2.500	1 7/8"-12 x 3.000	2 1/2"-12 x 3.000	2 1/4"-12 x 3.000	2 1/4"-12 x 4.500	3.124		1.000	2.062														2.250	3.375
	3.000	2 1/4"-12 x 3.500	3"-12 x 3.500	2 3/4"-12 x 3.500	2 3/4"-12 x 5.500	3.749		1.000	2.625														2.250	3.375
	3.500	2 1/2"-12 x 3.500	3 1/2"-12 x 3.500	3 1/4"-12 x 3.500	3 1/4"-12 x 6.500	4.249		1.000	3.000														2.250	3.375
	4.000	3"-12 x 4.000	4"-12 x 4.000	3 3/4"-12 x 4.000	3 3/4"-12 x 7.500	4.749		1.000	3.375														2.250	3.375
BORE	MM	KM & KF	KD	KI	KA	B	BB	C	D	DD	E	EE	F	G	J	KB	KC	LB	OD	P	R	TR	WB	Y

FILE: 1.12_MH12S2.dwg REV: 02/09/2010

27650 Groesbeck Hwy • Roseville, MI 48066-2759 • Phone 586.775.7211 • Fax 586.775.4545 • Toll Free 800.526.7968 • e-mail: sales@peninsularcylinders.com • www.peninsularcylinders.com

HEAD & CAP TIE ROD EXTENDED

Peninsular Mounting Style: **MH 12**

Heavy Duty Steel Air Cylinder

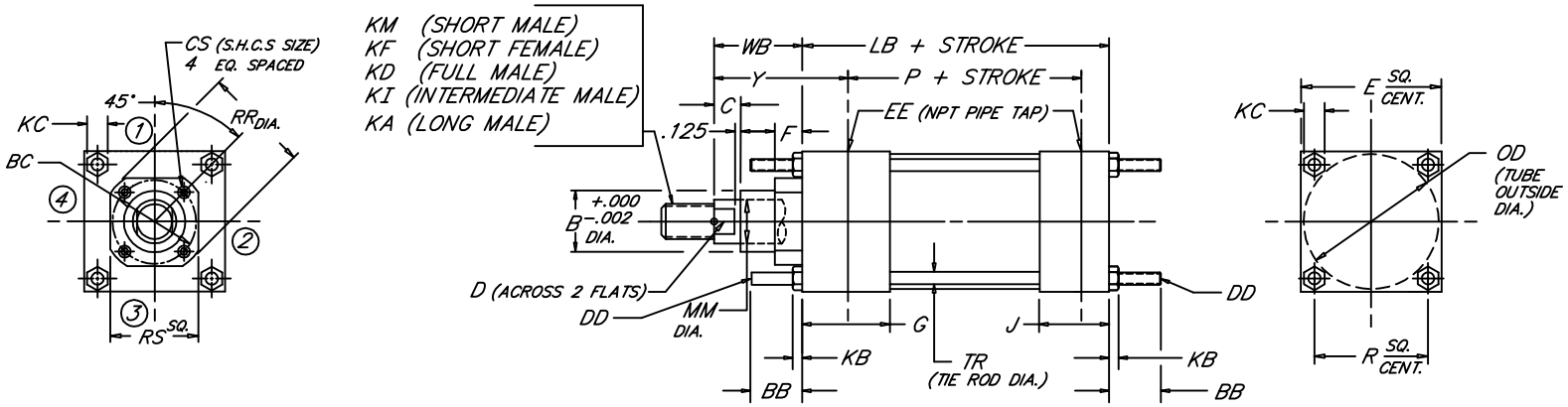

BORE	ROD MM	ROD THREAD X LENGTH KM & KF	KD	KI	KA	B	BB	BC	C	CS	D	DD	E	NPT EE	F	G	J	KB	KC	LB	OD	P	R	RR	RS	TR	WB	Y
8.000	1.375	1"-14 x 1.625	1 3/8"-12 x 1.625	1 1/4"-12 x 1.625	1 1/4"-12 x 2.500	1.999	2.312	3.267	.625	.312	1.125	5/8"-18	8.500	3/4	.625	2.000	1.500	.531	.938	5.125	8.450	3.375	6.435	3.734	3.000	.625	1.625	2.750
	1.750	1 1/4"-12 x 2.000	1 3/4"-12 x 2.000	1 1/2"-12 x 2.000	1 1/2"-12 x 3.000	2.374		3.267	.750	.312	1.500													3.734	3.000		1.875	3.000
	2.000	1 1/2"-12 x 2.250	2"-12 x 2.250	1 3/4"-12 x 2.250	1 3/4"-12 x 3.500	2.624		3.812	.875	.312	1.688													4.312	3.750		2.000	3.125
	2.500	1 7/8"-12 x 3.000	2 1/2"-12 x 3.000	2 1/4"-12 x 3.000	2 1/4"-12 x 4.500	3.124		3.812	1.000	.312	2.062													4.312	3.750		2.250	3.375
	3.000	2 1/4"-12 x 3.500	3"-12 x 3.500	2 3/4"-12 x 3.500	2 3/4"-12 x 5.500	3.749		4.700	1.000	.375	2.625													5.562	4.500		2.250	3.375
	3.500	2 1/2"-12 x 3.500	3 1/2"-12 x 3.500	3 1/4"-12 x 3.500	3 1/4"-12 x 6.500	4.249		5.200	1.000	.375	3.000													6.062	5.000		2.250	3.375
	4.000	3"-12 x 4.000	4"-12 x 4.000	3 3/4"-12 x 4.000	3 3/4"-12 x 7.500	4.749		5.700	1.000	.375	3.375													6.562	5.500		2.250	3.375
	4.500	3 1/4"-12 x 4.500	4 1/2"-12 x 4.500	4 1/4"-12 x 4.500	4 1/4"-12 x 8.250	5.249		6.200	1.000	.375	3.875													7.062	6.000		2.250	3.375
	5.000	3 1/2"-12 x 5.000	5"-12 x 5.000	4 3/4"-12 x 5.000	4 3/4"-12 x 9.000	5.749		6.700	1.000	.375	4.250													7.562	6.500		2.250	3.375
	5.500	4"-12 x 5.500	5 1/2"-12 x 5.500	5 1/4"-12 x 5.500	5 1/4"-12 x 10.000	6.249		7.125	1.000	.375	4.625													7.938	7.000		2.250	3.375
10.000	1.750	1 1/4"-12 x 2.000	1 3/4"-12 x 2.000	1 1/2"-12 x 2.000	1 1/2"-12 x 3.000	2.374	2.688	3.812	.750	.312	1.500	3/4"-16	10.625	1	.625	2.250	2.000	.625	1.094	6.375	10.450	4.250	7.920	4.312	3.750	.750	1.875	3.062
	2.000	1 1/2"-12 x 2.250	2"-12 x 2.250	1 3/4"-12 x 2.250	1 3/4"-12 x 3.500	2.624		3.812	.875	.312	1.688													4.312	3.750		2.000	3.187
	2.500	1 7/8"-12 x 3.000	2 1/2"-12 x 3.000	2 1/4"-12 x 3.000	2 1/4"-12 x 4.500	3.124		3.812	1.000	.312	2.062													4.312	3.750		2.250	3.437
	3.000	2 1/4"-12 x 3.500	3"-12 x 3.500	2 3/4"-12 x 3.500	2 3/4"-12 x 5.500	3.749		4.700	1.000	.375	2.625													5.562	4.500		2.250	3.437
	3.500	2 1/2"-12 x 3.500	3 1/2"-12 x 3.500	3 1/4"-12 x 3.500	3 1/4"-12 x 6.500	4.249		5.200	1.000	.375	3.000													6.062	5.000		2.250	3.437
	4.000	3"-12 x 4.000	4"-12 x 4.000	3 3/4"-12 x 4.000	3 3/4"-12 x 7.500	4.749		5.700	1.000	.375	3.375													6.562	5.500		2.250	3.437
	4.500	3 1/4"-12 x 4.500	4 1/2"-12 x 4.500	4 1/4"-12 x 4.500	4 1/4"-12 x 8.250	5.249		6.200	1.000	.375	3.875													7.062	6.000		2.250	3.437
	5.000	3 1/2"-12 x 5.000	5"-12 x 5.000	4 3/4"-12 x 5.000	4 3/4"-12 x 9.000	5.749		6.700	1.000	.375	4.250													7.562	6.500		2.250	3.437
	5.500	4"-12 x 5.500	5 1/2"-12 x 5.500	5 1/4"-12 x 5.500	5 1/4"-12 x 10.000	6.249		7.125	1.000	.375	4.625													7.938	7.000		2.250	3.437
12.000	2.000	1 1/2"-12 x 2.250	2"-12 x 2.250	1 3/4"-12 x 2.250	1 3/4"-12 x 3.500	2.624	2.688	3.812	.875	.312	1.688	3/4"-16	12.750	1	.625	2.250	2.000	.625	1.094	6.875	12.450	4.750	9.405	4.312	3.750	.750	2.000	3.187
	2.500	1 7/8"-12 x 3.000	2 1/2"-12 x 3.000	2 1/4"-12 x 3.000	2 1/4"-12 x 4.500	3.124		3.812	1.000	.312	2.062													4.312	3.750		2.250	3.437
	3.000	2 1/4"-12 x 3.500	3"-12 x 3.500	2 3/4"-12 x 3.500	2 3/4"-12 x 5.500	3.749		4.700	1.000	.375	2.625													5.562	4.500		2.250	3.437
	3.500	2 1/2"-12 x 3.500	3 1/2"-12 x 3.500	3 1/4"-12 x 3.500	3 1/4"-12 x 6.500	4.249		5.200	1.000	.375	3.000													6.062	5.000		2.250	3.437
	4.000	3"-12 x 4.000	4"-12 x 4.000	3 3/4"-12 x 4.000	3 3/4"-12 x 7.500	4.749		5.700	1.000	.375	3.375													6.562	5.500		2.250	3.437
	4.500	3 1/4"-12 x 4.500	4 1/2"-12 x 4.500	4 1/4"-12 x 4.500	4 1/4"-12 x 8.250	5.249		6.200	1.000	.375	3.875													7.062	6.000		2.250	3.437
	5.000	3 1/2"-12 x 5.000	5"-12 x 5.000	4 3/4"-12 x 5.000	4 3/4"-12 x 9.000	5.749		6.700	1.000	.375	4.250													7.562	6.500		2.250	3.437
	5.500	4"-12 x 5.500	5 1/2"-12 x 5.500	5 1/4"-12 x 5.500	5 1/4"-12 x 10.000	6.249		7.125	1.000	.375	4.625													7.938	7.000		2.250	3.437
14.000	2.500	1 7/8"-12 x 3.000	2 1/2"-12 x 3.000	2 1/4"-12 x 3.000	2 1/4"-12 x 4.500	3.124	3.188	3.812		.312	2.062	7/8"-14	14.750	1 1/4	.625	2.750	2.250	.750	1.281	8.125	14.450	5.625	10.889	4.312	3.750	.875	2.250	3.688
	3.000	2 1/4"-12 x 3.500	3"-12 x 3.500	2 3/4"-12 x 3.500	2 3/4"-12 x 5.500	3.749		4.700		.375	2.625													5.562	4.500			
	3.500	2 1/2"-12 x 3.500	3 1/2"-12 x 3.500	3 1/4"-12 x 3.500	3 1/4"-12 x 6.500	4.249		5.200		.375	3.000													6.062	5.000			
	4.000	3"-12 x 4.000	4"-12 x 4.000	3 3/4"-12 x 4.000	3 3/4"-12 x 7.500	4.749		5.700	1.000	.375	3.375													6.562	5.500			
	4.500	3 1/4"-12 x 4.500	4 1/2"-12 x 4.500	4 1/4"-12 x 4.500	4 1/4"-12 x 8.250	5.249		6.200		.375	3.875													7.062	6.000			
	5.000	3 1/2"-12 x 5.000	5"-12 x 5.000	4 3/4"-12 x 5.000	4 3/4"-12 x 9.000	5.749		6.700		.375	4.250													7.562	6.500			
	5.500	4"-12 x 5.500	5 1/2"-12 x 5.500	5 1/4"-12 x 5.500	5 1/4"-12 x 10.000	6.249		7.125		.375	4.625													7.938	7.000			
BORE	MM	KM & KF	KD	KI	KA	B	BB	BC	C	CS	D	DD	E	EE	F	G	J	KB	KC	LB	OD	P	R	RR	RS	TR	WB	Y

FILE: 1.12_MH12L2.dwg REV: 02/09/2010

27650 Groesbeck Hwy • Roseville, MI 48066-2759 • Phone 586.775.7211 • Fax 586.775.4545 • Toll Free 800.526.7968 • e-mail: sales@peninsularcylinders.com • www.peninsularcylinders.com

END ANGLES

Heavy Duty Steel Air Cylinder

Peninsular Mounting Style: **MH 13**

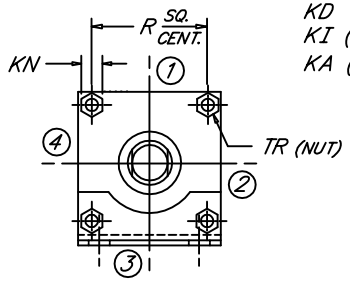

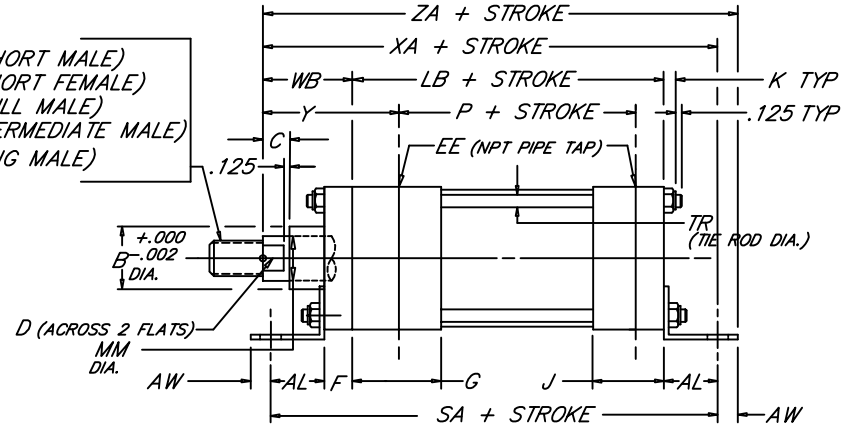

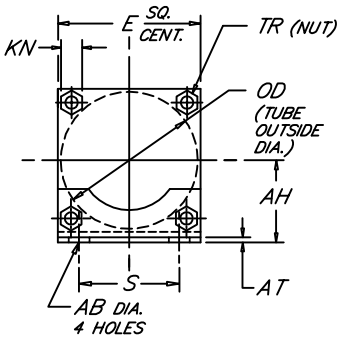

BORE	ROD MM	ROD THREAD X LENGTH KM & KF	KD	KI	KA	AB	AH	AL	AT	AW	B	C	D	E	NPT EE	F	G	J	K	KN	LB	OD	P	R	S	SA	TR	WB	XA	Y	ZA
1.500	.625	7/16"-20 x .750	5/8"-18 x .750	1/2"-20 x .750	1/2"-20 x 1.125	.438	1.188	1.000	.125	.375	1.124	.375	.500	2.000	3/8	.375	1.500	1.000	.312	.438	3.625	1.750	2.335	1.428	1.250	6.000	.250	1.000	5.625	1.875	6.000
	1.000	3/4"-16 x 1.125	1"-14 x 1.125	7/8"-14 x 1.125	7/8"-14 x 1.875						1.499	.500	.875															1.375	6.000	2.250	6.375
2.000	.625	7/16"-20 x .750	5/8"-18 x .750	1/2"-20 x .750	1/2"-20 x 1.125	.438	1.438	1.000	.125	.375	1.124	.375	.500	2.500	3/8	.375	1.500	1.000	.344	.500	3.625	2.250	2.335	1.838	1.750	6.000	.312	1.000	5.625	1.875	6.000
	1.000	3/4"-16 x 1.125	1"-14 x 1.125	7/8"-14 x 1.125	7/8"-14 x 1.875						1.499	.500	.875															1.375	6.000	2.250	6.375
	1.375	1"-14 x 1.625	1 3/8"-12 x 1.625	1 1/4"-12 x 1.625	1 1/4"-12 x 2.500						1.999	.625	1.125															1.625	6.250	2.500	6.625
2.500	.625	7/16"-20 x .750	5/8"-18 x .750	1/2"-20 x .750	1/2"-20 x 1.125	.438	1.625	1.000	.125	.375	1.124	.375	.500	3.000	3/8	.375	1.500	1.000	.344	.500	3.750	2.750	2.460	2.192	2.250	6.125	.312	1.000	5.750	1.875	6.125
	1.000	3/4"-16 x 1.125	1"-14 x 1.125	7/8"-14 x 1.125	7/8"-14 x 1.875						1.499	.500	.875															1.375	6.125	2.250	6.500
	1.375	1"-14 x 1.625	1 3/8"-12 x 1.625	1 1/4"-12 x 1.625	1 1/4"-12 x 2.500						1.999	.625	1.125															1.625	6.375	2.500	6.750
	1.750	1 1/4"-12 x 2.000	1 3/4"-12 x 2.000	1 1/2"-12 x 2.000	1 1/2"-12 x 3.000						2.374	.750	1.500															1.875	6.625	2.750	7.000
3.250	1.000	3/4"-16 x 1.125	1"-14 x 1.125	7/8"-14 x 1.125	7/8"-14 x 1.875	.562	1.938	1.250	.125	.500	1.499	.500	.875	3.750	1/2	.625	1.750	1.250	.438	.562	4.250	3.500	2.750	2.758	2.750	7.375	.375	1.375	6.875	2.375	7.375
	1.375	1"-14 x 1.625	1 3/8"-12 x 1.625	1 1/4"-12 x 1.625	1 1/4"-12 x 2.500						1.999	.625	1.125															1.625	7.125	2.625	7.625
	1.750	1 1/4"-12 x 2.000	1 3/4"-12 x 2.000	1 1/2"-12 x 2.000	1 1/2"-12 x 3.000						2.374	.750	1.500															1.875	7.375	2.875	7.875
	2.000	1 1/2"-12 x 2.250	2"-12 x 2.250	1 3/4"-12 x 2.250	1 3/4"-12 x 3.500						2.624	.875	1.688															2.000	7.500	3.000	8.000
4.000	1.000	3/4"-16 x 1.125	1"-14 x 1.125	7/8"-14 x 1.125	7/8"-14 x 1.875	.562	2.250	1.250	.125	.500	1.499	.500	.875	4.500	1/2	.625	1.750	1.250	.438	.562	4.250	4.250	2.750	3.323	3.500	7.375	.375	1.375	6.875	2.375	7.375
	1.375	1"-14 x 1.625	1 3/8"-12 x 1.625	1 1/4"-12 x 1.625	1 1/4"-12 x 2.500						1.999	.625	1.125															1.625	7.125	2.625	7.625
	1.750	1 1/4"-12 x 2.000	1 3/4"-12 x 2.000	1 1/2"-12 x 2.000	1 1/2"-12 x 3.000						2.374	.750	1.500															1.875	7.375	2.875	7.875
	2.000	1 1/2"-12 x 2.250	2"-12 x 2.250	1 3/4"-12 x 2.250	1 3/4"-12 x 3.500						2.624	.875	1.688															2.000	7.500	3.000	8.000
	2.500	1 7/8"-12 x 3.000	2 1/2"-12 x 3.000	2 1/4"-12 x 3.000	2 1/4"-12 x 4.500						3.124	1.000	2.062															2.250	7.750	3.250	8.250
5.000	1.000	3/4"-16 x 1.125	1"-14 x 1.125	7/8"-14 x 1.125	7/8"-14 x 1.875	.688	2.750	1.375	.188	.625	1.499	.500	.875	5.500	1/2	.625	1.750	1.250	.594	.750	4.500	5.250	3.000	4.101	4.250	7.875	.500	1.375	7.250	2.375	7.875
	1.375	1"-14 x 1.625	1 3/8"-12 x 1.625	1 1/4"-12 x 1.625	1 1/4"-12 x 2.500						1.999	.625	1.125															1.625	7.500	2.625	8.125
	1.750	1 1/4"-12 x 2.000	1 3/4"-12 x 2.000	1 1/2"-12 x 2.000	1 1/2"-12 x 3.000						2.374	.750	1.500															1.875	7.750	2.875	8.375
	2.000	1 1/2"-12 x 2.250	2"-12 x 2.250	1 3/4"-12 x 2.250	1 3/4"-12 x 3.500						2.624	.875	1.688															2.000	7.875	3.000	8.500
	2.500	1 7/8"-12 x 3.000	2 1/2"-12 x 3.000	2 1/4"-12 x 3.000	2 1/4"-12 x 4.500						3.124	1.000	2.062															2.250	8.125	3.250	8.750
	3.000	2 1/4"-12 x 3.500	3"-12 x 3.500	2 3/4"-12 x 3.500	2 3/4"-12 x 5.500						3.749	1.000	2.625															2.250	8.125	3.250	8.750
	3.500	2 1/2"-12 x 3.500	3 1/2"-12 x 3.500	3 1/4"-12 x 3.500	3 1/4"-12 x 6.500						4.249	1.000	3.000															2.250	8.125	3.250	8.750
6.000	1.375	1"-14 x 1.625	1 3/8"-12 x 1.625	1 1/4"-12 x 1.625	1 1/4"-12 x 2.500	.812	3.250	1.375	.188	.625	1.999	.625	1.125	6.500	3/4	.750	2.000	1.500	.594	.750	5.000	6.250	3.250	4.879	5.250	8.500	.500	1.625	8.000	2.750	8.625
	1.750	1 1/4"-12 x 2.000	1 3/4"-12 x 2.000	1 1/2"-12 x 2.000	1 1/2"-12 x 3.000						2.374	.750	1.500															1.875	8.250	3.000	8.875
	2.000	1 1/2"-12 x 2.250	2"-12 x 2.250	1 3/4"-12 x 2.250	1 3/4"-12 x 3.500						2.624	.875	1.688															2.000	8.375	3.125	9.000
	2.500	1 7/8"-12 x 3.000	2 1/2"-12 x 3.000	2 1/4"-12 x 3.000	2 1/4"-12 x 4.500						3.124	1.000	2.062															2.250	8.625	3.375	9.250
	3.000	2 1/4"-12 x 3.500	3"-12 x 3.500	2 3/4"-12 x 3.500	2 3/4"-12 x 5.500						3.749	1.000	2.625															2.250	8.625	3.375	9.250
	3.500	2 1/2"-12 x 3.500	3 1/2"-12 x 3.500	3 1/4"-12 x 3.500	3 1/4"-12 x 6.500						4.249	1.000	3.000															2.250	8.625	3.375	9.250
	4.000	3"-12 x 4.000	4"-12 x 4.000	3 3/4"-12 x 4.000	3 3/4"-12 x 7.500						4.749	1.000	3.375															2.250	8.625	3.375	9.250
BORE	MM	KM & KF	KD	KI	KA	AB	AH	AL	AT	AW	B	C	D	E	EE	F	G	J	K	KN	LB	OD	P	R	S	SA	TR	WB	XA	Y	ZA

FILE: 1.13_MH13S2.dwg REV: 02/09/2010

27650 Groesbeck Hwy • Roseville, MI 48066-2759 • Phone 586.775.7211 • Fax 586.775.4545 • Toll Free 800.526.7968 • e-mail: sales@peninsularcylinders.com • www.peninsularcylinders.com

END ANGLES

Heavy Duty Steel Air Cylinder

Peninsular Mounting Style: **MH 13**

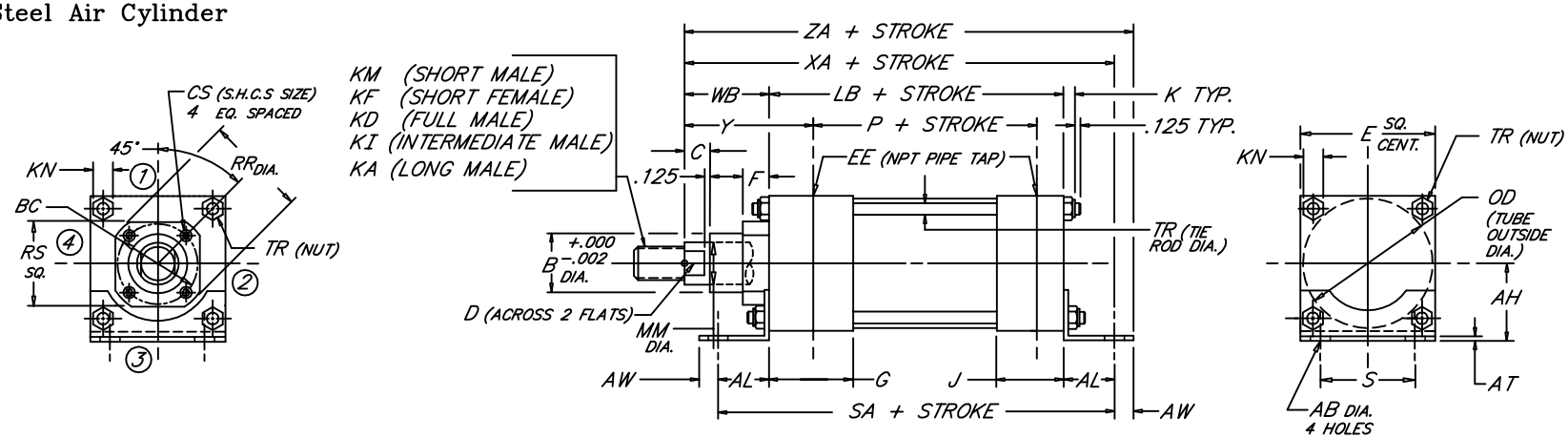

BORE	MM	KM & KF	KD	KI	KA	AB	AH	AL	AT	AW	B	BC	C	CS	D	E	EE	F	G	J	K	KN	LB	OD	P	R	RR	RS	S	SA	TR	WB	XA	Y	ZA
	ROD	ROD THREAD X LENGTH															NPT																		
8.000	1.375	1"-14 x 1.625	1 3/8"-12 x 1.625	1 1/4"-12 x 1.625	1 1/4"-12 x 2.500	.812	4.250	1.8125	.250	.688	1.999	3.267	.625	.312	1.125	8.500	3/4	.625	2.000	1.500	.750	.938	5.125	8.450	3.375	6.435	3.734	3.000	7.125	8.750	.625	1.625	8.562	2.750	9.250
	1.750	1 1/4"-12 x 2.000	1 3/4"-12 x 2.000	1 1/2"-12 x 2.000	1 1/2"-12 x 3.000						2.374	3.267	.750	.312	1.500												3.734	3.000				1.875	8.812	3.000	9.500
	2.000	1 1/2"-12 x 2.250	2"-12 x 2.250	1 3/4"-12 x 2.250	1 3/4"-12 x 3.500						2.624	3.812	.875	.312	1.688												4.312	3.750				2.000	8.938	3.125	9.625
	2.500	1 7/8"-12 x 3.000	2 1/2"-12 x 3.000	2 1/4"-12 x 3.000	2 1/4"-12 x 4.500						3.124	3.812	1.000	.312	2.062												4.312	3.750				2.250	9.188	3.375	9.875
	3.000	2 1/4"-12 x 3.500	3"-12 x 3.500	2 3/4"-12 x 3.500	2 3/4"-12 x 5.500						3.749	4.700	1.000	.375	2.625												5.562	4.500				2.250	9.188	3.375	9.875
	3.500	2 1/2"-12 x 3.500	3 1/2"-12 x 3.500	3 1/4"-12 x 3.500	3 1/4"-12 x 6.500						4.249	5.200	1.000	.375	3.000												6.062	5.000				2.250	9.188	3.375	9.875
	4.000	3"-12 x 4.000	4"-12 x 4.000	3 3/4"-12 x 4.000	3 3/4"-12 x 7.500						4.749	5.700	1.000	.375	3.375												6.562	5.500				2.250	9.188	3.375	9.875
	4.500	3 1/4"-12 x 4.500	4 1/2"-12 x 4.500	4 1/4"-12 x 4.500	4 1/4"-12 x 8.250						5.249	6.200	1.000	.375	3.875												7.062	6.000				2.250	9.188	3.375	9.875
	5.000	3 1/2"-12 x 5.000	5"-12 x 5.000	4 3/4"-12 x 5.000	4 3/4"-12 x 9.000						5.749	6.700	1.000	.375	4.250												7.562	6.500				2.250	9.188	3.375	9.875
	5.500	4"-12 x 5.500	5 1/2"-12 x 5.500	5 1/4"-12 x 5.500	5 1/4"-12 x 10.000						6.249	7.125	1.000	.375	4.625												7.938	7.000				2.250	9.188	3.375	9.875
10.000	1.750	1 1/4"-12 x 2.000	1 3/4"-12 x 2.000	1 1/2"-12 x 2.000	1 1/2"-12 x 3.000	1.062	5.312	2.125	.250	.875	2.374	3.812	.750	.312	1.500	10.625	1	.625	2.250	2.000	.875	1.062	6.375	10.450	4.250	7.920	4.312	3.750	8.875	10.625	.750	1.875	10.375	3.062	11.250
	2.000	1 1/2"-12 x 2.250	2"-12 x 2.250	1 3/4"-12 x 2.250	1 3/4"-12 x 3.500						2.624	3.812	.875	.312	1.688												4.312	3.750				2.000	10.500	3.187	11.375
	2.500	1 7/8"-12 x 3.000	2 1/2"-12 x 3.000	2 1/4"-12 x 3.000	2 1/4"-12 x 4.500						3.124	3.812	1.000	.312	2.062												4.312	3.750				2.250	10.750	3.437	11.625
	3.000	2 1/4"-12 x 3.500	3"-12 x 3.500	2 3/4"-12 x 3.500	2 3/4"-12 x 5.500						3.749	4.700	1.000	.375	2.625												5.562	4.500				2.250	10.750	3.437	11.625
	3.500	2 1/2"-12 x 3.500	3 1/2"-12 x 3.500	3 1/4"-12 x 3.500	3 1/4"-12 x 6.500						4.249	5.200	1.000	.375	3.000												6.062	5.000				2.250	10.750	3.437	11.625
	4.000	3"-12 x 4.000	4"-12 x 4.000	3 3/4"-12 x 4.000	3 3/4"-12 x 7.500						4.749	5.700	1.000	.375	3.375												6.562	5.500				2.250	10.750	3.437	11.625
	4.500	3 1/4"-12 x 4.500	4 1/2"-12 x 4.500	4 1/4"-12 x 4.500	4 1/4"-12 x 8.250						5.249	6.200	1.000	.375	3.875												7.062	6.000				2.250	10.750	3.437	11.625
	5.000	3 1/2"-12 x 5.000	5"-12 x 5.000	4 3/4"-12 x 5.000	4 3/4"-12 x 9.000						5.749	6.700	1.000	.375	4.250												7.562	6.500				2.250	10.750	3.437	11.625
	5.500	4"-12 x 5.500	5 1/2"-12 x 5.500	5 1/4"-12 x 5.500	5 1/4"-12 x 10.000						6.249	7.125	1.000	.375	4.625												7.938	7.000				2.250	10.750	3.437	11.625
12.000	2.000	1 1/2"-12 x 2.250	2"-12 x 2.250	1 3/4"-12 x 2.250	1 3/4"-12 x 3.500	1.062	6.375	2.125	.375	.875	2.624	3.812	.875	.312	1.688	12.750	1	.625	2.250	2.000	.875	1.062	6.875	12.450	4.750	9.405	4.312	3.750	11.000	11.125	.750	2.000	11.000	3.187	11.875
	2.500	1 7/8"-12 x 3.000	2 1/2"-12 x 3.000	2 1/4"-12 x 3.000	2 1/4"-12 x 4.500						3.124	3.812	1.000	.312	2.062												4.312	3.750				2.250	11.250	3.437	12.125
	3.000	2 1/4"-12 x 3.500	3"-12 x 3.500	2 3/4"-12 x 3.500	2 3/4"-12 x 5.500						3.749	4.700	1.000	.375	2.625												5.562	4.500				2.250	11.250	3.437	12.125
	3.500	2 1/2"-12 x 3.500	3 1/2"-12 x 3.500	3 1/4"-12 x 3.500	3 1/4"-12 x 6.500						4.249	5.200	1.000	.375	3.000												6.062	5.000				2.250	11.250	3.437	12.125
	4.000	3"-12 x 4.000	4"-12 x 4.000	3 3/4"-12 x 4.000	3 3/4"-12 x 7.500						4.749	5.700	1.000	.375	3.375												6.562	5.500				2.250	11.250	3.437	12.125
	4.500	3 1/4"-12 x 4.500	4 1/2"-12 x 4.500	4 1/4"-12 x 4.500	4 1/4"-12 x 8.250						5.249	6.200	1.000	.375	3.875												7.062	6.000				2.250	11.250	3.437	12.125
	5.000	3 1/2"-12 x 5.000	5"-12 x 5.000	4 3/4"-12 x 5.000	4 3/4"-12 x 9.000						5.749	6.700	1.000	.375	4.250												7.562	6.500				2.250	11.250	3.437	12.125
	5.500	4"-12 x 5.500	5 1/2"-12 x 5.500	5 1/4"-12 x 5.500	5 1/4"-12 x 10.000						6.249	7.125	1.000	.375	4.625												7.938	7.000				2.250	11.250	3.437	12.125
14.000	2.500	1 7/8"-12 x 3.000	2 1/2"-12 x 3.000	2 1/4"-12 x 3.000	2 1/4"-12 x 4.500	1.312	7.375	2.4375	.375	1.062	3.124	3.812		.312	2.062	14.750	1 1/4	.625	2.750	2.250	1.000	1.250	8.125	14.450	5.625	10.889	4.312	3.750	12.625	13.000	.875	2.250	12.812	3.688	13.875
	3.000	2 1/4"-12 x 3.500	3"-12 x 3.500	2 3/4"-12 x 3.500	2 3/4"-12 x 5.500						3.749	4.700		.375	2.625												5.562	4.500							
	3.500	2 1/2"-12 x 3.500	3 1/2"-12 x 3.500	3 1/4"-12 x 3.500	3 1/4"-12 x 6.500						4.249	5.200		.375	3.000												6.062	5.000							
	4.000	3"-12 x 4.000	4"-12 x 4.000	3 3/4"-12 x 4.000	3 3/4"-12 x 7.500						4.749	5.700	1.000	.375	3.375												6.562	5.500							
	4.500	3 1/4"-12 x 4.500	4 1/2"-12 x 4.500	4 1/4"-12 x 4.500	4 1/4"-12 x 8.250						5.249	6.200		.375	3.875												7.062	6.000							
	5.000	3 1/2"-12 x 5.000	5"-12 x 5.000	4 3/4"-12 x 5.000	4 3/4"-12 x 9.000						5.749	6.700		.375	4.250												7.562	6.500							
	5.500	4"-12 x 5.500	5 1/2"-12 x 5.500	5 1/4"-12 x 5.500	5 1/4"-12 x 10.000						6.249	7.125		.375	4.625												7.938	7.000							
BORE	MM	KM & KF	KD	KI	KA	AB	AH	AL	AT	AW	B	BC	C	CS	D	E	EE	F	G	J	K	KN	LB	OD	P	R	RR	RS	S	SA	TR	WB	XA	Y	ZA

FILE: 1.13_MH13L2.dwg REV: 02/09/2010

27650 Groesbeck Hwy • Roseville, MI 48066-2759 • Phone 586.775.7211 • Fax 586.775.4545 • Toll Free 800.526.7968 • e-mail: sales@peninsularcylinders.com • www.peninsularcylinders.com

END LUGS

Heavy Duty Steel Air Cylinder

Peninsular Mounting Style: **MH 14**

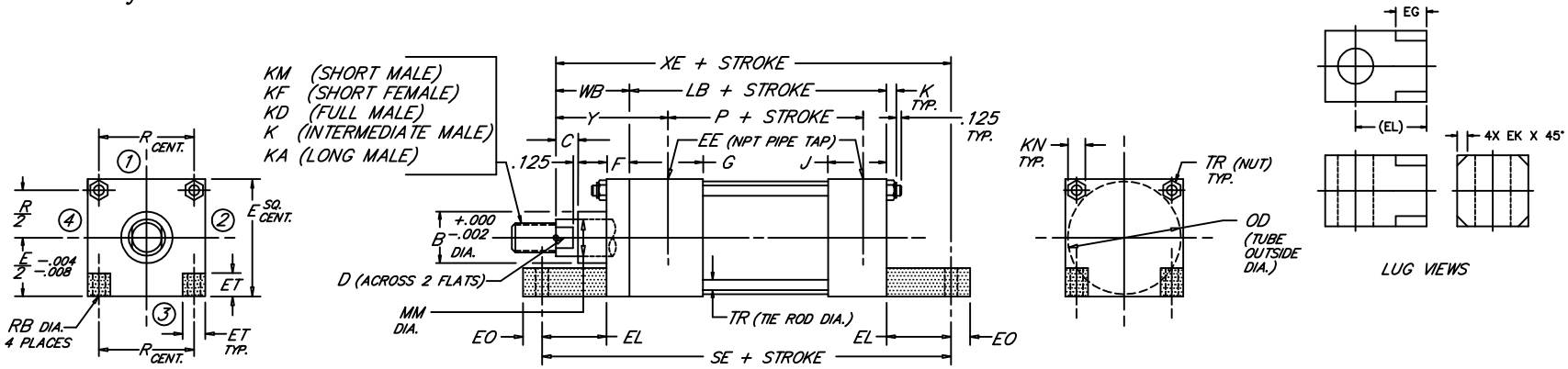

BORE	ROD MM	ROD THREAD X LENGTH KM & KF	KD	KI	KA	B	C	D	E	NPT EE	EG	EK	EL	EO	ET	F	G	J	K	KN	LB	OD	P	R	RB	SE	TR	WB	XE	Y
1.500	.625	7/16"-20 x .750	5/8"-18 x .750	1/2"-20 x .750	1/2"-20 x 1.125	1.124	.375	.500	2.000	3/8	---	---	.750	.250	.562	.375	1.500	1.000	.312	.438	3.625	1.750	2.335	1.428	.312	5.500	.250	1.000	5.375	1.875
	1.000	3/4"-16 x 1.125	1"-14 x 1.125	7/8"-14 x 1.125	7/8"-14 x 1.875	1.499	.500	.875			.620	.190																1.375	5.750	2.250
2.000	.625	7/16"-20 x .750	5/8"-18 x .750	1/2"-20 x .750	1/2"-20 x 1.125	1.124	.375	.500	2.500	3/8	---	---	.9375	.312	.625	.375	1.500	1.000	.344	.500	3.625	2.250	2.335	1.838	.375	5.875	.312	1.000	5.562	1.875
	1.000	3/4"-16 x 1.125	1"-14 x 1.125	7/8"-14 x 1.125	7/8"-14 x 1.875	1.499	.500	.875			---	---																1.375	5.938	2.250
	1.375	1"-14 x 1.625	1 3/8"-12 x 1.625	1 1/4"-12 x 1.625	1 1/4"-12 x 2.500	1.999	.625	1.125			.750	.190																1.625	6.188	2.500
2.500	.625	7/16"-20 x .750	5/8"-18 x .750	1/2"-20 x .750	1/2"-20 x 1.125	1.124	.375	.500	3.000	3/8	---	---	1.0625	.312	.781	.375	1.500	1.000	.344	.500	3.750	2.750	2.460	2.192	.375	6.250	.312	1.000	5.812	1.875
	1.000	3/4"-16 x 1.125	1"-14 x 1.125	7/8"-14 x 1.125	7/8"-14 x 1.875	1.499	.500	.875			---	---																1.375	6.188	2.250
	1.375	1"-14 x 1.625	1 3/8"-12 x 1.625	1 1/4"-12 x 1.625	1 1/4"-12 x 2.500	1.999	.625	1.125			---	---																1.625	6.438	2.500
	1.750	1 1/4"-12 x 2.000	1 3/4"-12 x 2.000	1 1/2"-12 x 2.000	1 1/2"-12 x 3.000	2.374	.750	1.500			.880	.250																1.875	6.688	2.750
3.250	1.000	3/4"-16 x 1.125	1"-14 x 1.125	7/8"-14 x 1.125	7/8"-14 x 1.875	1.499	.500	.875	3.750	1/2	---	---	.875	.375	1.000	.625	1.750	1.250	.438	.562	4.250	3.500	2.750	2.758	.438	6.625	.375	1.375	6.500	2.375
	1.375	1"-14 x 1.625	1 3/8"-12 x 1.625	1 1/4"-12 x 1.625	1 1/4"-12 x 2.500	1.999	.625	1.125			---	---																1.625	6.750	2.625
	1.750	1 1/4"-12 x 2.000	1 3/4"-12 x 2.000	1 1/2"-12 x 2.000	1 1/2"-12 x 3.000	2.374	.750	1.500			---	---																1.875	7.000	2.875
	2.000	1 1/2"-12 x 2.250	2"-12 x 2.250	1 3/4"-12 x 2.250	1 3/4"-12 x 3.500	2.624	.875	1.688			.620	.120																2.000	7.125	3.000
4.000	1.000	3/4"-16 x 1.125	1"-14 x 1.125	7/8"-14 x 1.125	7/8"-14 x 1.875	1.499	.500	.875	4.500	1/2	---	---	1.000	.375	1.188	.625	1.750	1.250	.438	.562	4.250	4.250	2.750	3.323	.438	6.875	.375	1.375	6.625	2.375
	1.375	1"-14 x 1.625	1 3/8"-12 x 1.625	1 1/4"-12 x 1.625	1 1/4"-12 x 2.500	1.999	.625	1.125			---	---																1.625	6.875	2.625
	1.750	1 1/4"-12 x 2.000	1 3/4"-12 x 2.000	1 1/2"-12 x 2.000	1 1/2"-12 x 3.000	2.374	.750	1.500			---	---																1.875	7.125	2.875
	2.000	1 1/2"-12 x 2.250	2"-12 x 2.250	1 3/4"-12 x 2.250	1 3/4"-12 x 3.500	2.624	.875	1.688			---	---																2.000	7.250	3.000
	2.500	1 7/8"-12 x 3.000	2 1/2"-12 x 3.000	2 1/4"-12 x 3.000	2 1/4"-12 x 4.500	3.124	1.000	2.062			.750	.090																2.250	7.500	3.250
5.000	1.000	3/4"-16 x 1.125	1"-14 x 1.125	7/8"-14 x 1.125	7/8"-14 x 1.875	1.499	.500	.875	5.500	1/2	---	---	1.0625	.500	1.375	.625	1.750	1.250	.594	.750	4.500	5.250	3.000	4.101	.562	7.250	.500	1.375	6.938	2.375
	1.375	1"-14 x 1.625	1 3/8"-12 x 1.625	1 1/4"-12 x 1.625	1 1/4"-12 x 2.500	1.999	.625	1.125			---	---																1.625	7.188	2.625
	1.750	1 1/4"-12 x 2.000	1 3/4"-12 x 2.000	1 1/2"-12 x 2.000	1 1/2"-12 x 3.000	2.374	.750	1.500			---	---																1.875	7.438	2.875
	2.000	1 1/2"-12 x 2.250	2"-12 x 2.250	1 3/4"-12 x 2.250	1 3/4"-12 x 3.500	2.624	.875	1.688			---	---																2.000	7.562	3.000
	2.500	1 7/8"-12 x 3.000	2 1/2"-12 x 3.000	2 1/4"-12 x 3.000	2 1/4"-12 x 4.500	3.124	1.000	2.062			---	---																2.250	7.812	3.250
	3.000	2 1/4"-12 x 3.500	3"-12 x 3.500	2 3/4"-12 x 3.500	2 3/4"-12 x 5.500	3.749	1.000	2.625			---	---																2.250	7.812	3.250
	3.500	2 1/2"-12 x 3.500	3 1/2"-12 x 3.500	3 1/4"-12 x 3.500	3 1/4"-12 x 6.500	4.249	1.000	3.000			.750	.280																2.250	7.812	3.250
6.000	1.375	1"-14 x 1.625	1 3/8"-12 x 1.625	1 1/4"-12 x 1.625	1 1/4"-12 x 2.500	1.999	.625	1.125	6.500	3/4	---	---	1.000	.500	1.625	.750	2.000	1.500	.594	.750	5.000	6.250	3.250	4.879	.562	7.750	.500	1.625	7.625	2.750
	1.750	1 1/4"-12 x 2.000	1 3/4"-12 x 2.000	1 1/2"-12 x 2.000	1 1/2"-12 x 3.000	2.374	.750	1.500			---	---																1.875	7.875	3.000
	2.000	1 1/2"-12 x 2.250	2"-12 x 2.250	1 3/4"-12 x 2.250	1 3/4"-12 x 3.500	2.624	.875	1.688			---	---																2.000	8.000	3.125
	2.500	1 7/8"-12 x 3.000	2 1/2"-12 x 3.000	2 1/4"-12 x 3.000	2 1/4"-12 x 4.500	3.124	1.000	2.062			---	---																2.250	8.250	3.375
	3.000	2 1/4"-12 x 3.500	3"-12 x 3.500	2 3/4"-12 x 3.500	2 3/4"-12 x 5.500	3.749	1.000	2.625			---	---																2.250	8.250	3.375
	3.500	2 1/2"-12 x 3.500	3 1/2"-12 x 3.500	3 1/4"-12 x 3.500	3 1/4"-12 x 6.500	4.249	1.000	3.000			---	---																2.250	8.250	3.375
	4.000	3"-12 x 4.000	4"-12 x 4.000	3 3/4"-12 x 4.000	3 3/4"-12 x 7.500	4.749	1.000	3.375			.620	.120																2.250	8.250	3.375
BORE	MM	KM & KF	KD	KI	KA	B	C	D	E	EE	EG	EK	EL	EO	ET	F	G	J	K	KN	LB	OD	P	R	RB	SE	TR	WB	XE	Y

FILE: 1.14_MH14S2.dwg REV: 02/09/2010

27650 Groesbeck Hwy • Roseville, MI 48066-2759 • Phone 586.775.7211 • Fax 586.775.4545 • Toll Free 800.526.7968 • e-mail: sales@peninsularcylinders.com • www.peninsularcylinders.com

END LUGS

Heavy Duty Steel Air Cylinder

Peninsular Mounting Style: **MH 14**

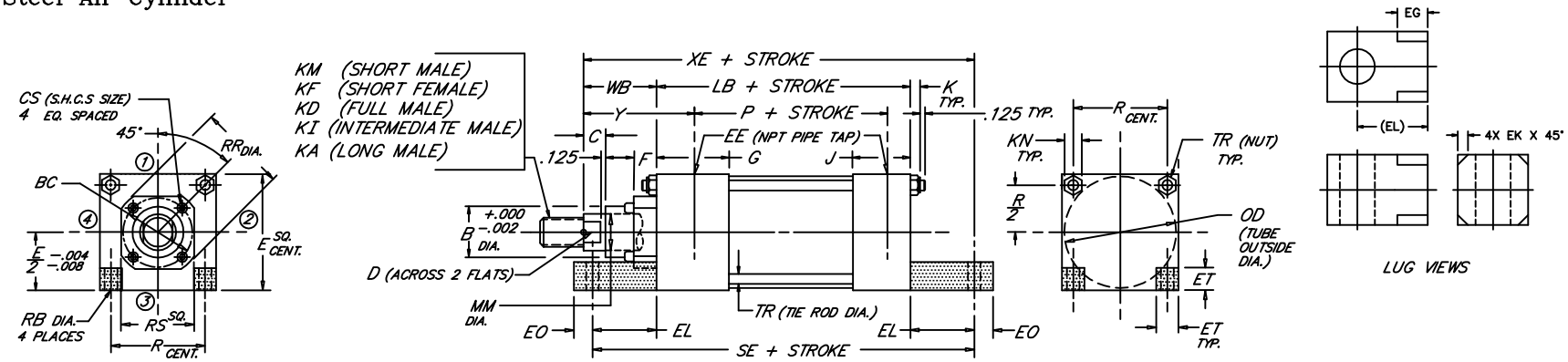

BORE	ROD MM	ROD THREAD X LENGTH KM & KF	KD	KI	KA	B	BC	C	CS	D	E	NPT EE	EG	EK	EL	EO	ET	F	G	J	K	KN	LB	OD	P	R	RB	RR	RS	SE	TR	WB	XE	Y
8.000	1.375	1"-14 x 1.625	1 3/8"-12 x 1.625	1 1/4"-12 x 1.625	1 1/4"-12 x 2.500	1.999	3.267	.625	.312	1.125	8.500	3/4	---	---	1.125	.625	2.062	.625	2.000	1.500	.750	.938	5.125	8.450	3.375	6.435	.688	3.734	3.000	7.375	.625	1.625	7.875	2.750
	1.750	1 1/4"-12 x 2.000	1 3/4"-12 x 2.000	1 1/2"-12 x 2.000	1 1/2"-12 x 3.000	2.374	3.267	.750	.312	1.500			---	---														3.734	3.000			1.875	8.125	3.000
	2.000	1 1/2"-12 x 2.250	2"-12 x 2.250	1 3/4"-12 x 2.250	1 3/4"-12 x 3.500	2.624	3.812	.875	.312	1.688			---	---														4.312	3.750			2.000	8.250	3.125
	2.500	1 7/8"-12 x 3.000	2 1/2"-12 x 3.000	2 1/4"-12 x 3.000	2 1/4"-12 x 4.500	3.124	3.812	1.000	.312	2.062			---	---														4.312	3.750			2.250	8.500	3.375
	3.000	2 1/4"-12 x 3.500	3"-12 x 3.500	2 3/4"-12 x 3.500	2 3/4"-12 x 5.500	3.749	4.700	1.000	.375	2.625			---	---														5.562	4.500			2.250	8.500	3.375
	3.500	2 1/2"-12 x 3.500	3 1/2"-12 x 3.500	3 1/4"-12 x 3.500	3 1/4"-12 x 6.500	4.249	5.200	1.000	.375	3.000			---	---														6.062	5.000			2.250	8.500	3.375
	4.000	3"-12 x 4.000	4"-12 x 4.000	3 3/4"-12 x 4.000	3 3/4"-12 x 7.500	4.749	5.700	1.000	.375	3.375			---	---														6.562	5.500			2.250	8.500	3.375
	4.500	3 1/4"-12 x 4.500	4 1/2"-12 x 4.500	4 1/4"-12 x 4.500	4 1/4"-12 x 8.250	5.249	6.200	1.000	.375	3.875			---	---														7.062	6.000			2.250	8.500	3.375
	5.000	3 1/2"-12 x 5.000	5"-12 x 5.000	4 3/4"-12 x 5.000	4 3/4"-12 x 9.000	5.749	6.700	1.000	.375	4.250			---	---														7.562	6.500			2.250	8.500	3.375
	5.500	4"-12 x 5.500	5 1/2"-12 x 5.500	5 1/4"-12 x 5.500	5 1/4"-12 x 10.000	6.249	7.125	1.000	.375	4.625			1.380	.060														7.938	7.000			2.250	8.500	3.375
10.000	1.750	1 1/4"-12 x 2.000	1 3/4"-12 x 2.000	1 1/2"-12 x 2.000	1 1/2"-12 x 3.000	2.374	3.812	.750	.312	1.500	10.625	1	---	---	1.3125	.625	2.688	.625	2.250	2.000	.875	1.062	6.375	10.450	4.250	7.920	.812	4.312	3.750	9.000	.750	1.875	9.562	3.062
	2.000	1 1/2"-12 x 2.250	2"-12 x 2.250	1 3/4"-12 x 2.250	1 3/4"-12 x 3.500	2.624	3.812	.875	.312	1.688																		4.312	3.750			2.000	9.688	3.187
	2.500	1 7/8"-12 x 3.000	2 1/2"-12 x 3.000	2 1/4"-12 x 3.000	2 1/4"-12 x 4.500	3.124	3.812	1.000	.312	2.062																		4.312	3.750			2.250	9.938	3.437
	3.000	2 1/4"-12 x 3.500	3"-12 x 3.500	2 3/4"-12 x 3.500	2 3/4"-12 x 5.500	3.749	4.700	1.000	.375	2.625																		5.562	4.500			2.250	9.938	3.437
	3.500	2 1/2"-12 x 3.500	3 1/2"-12 x 3.500	3 1/4"-12 x 3.500	3 1/4"-12 x 6.500	4.249	5.200	1.000	.375	3.000																		6.062	5.000			2.250	9.938	3.437
	4.000	3"-12 x 4.000	4"-12 x 4.000	3 3/4"-12 x 4.000	3 3/4"-12 x 7.500	4.749	5.700	1.000	.375	3.375																		6.562	5.500			2.250	9.938	3.437
	4.500	3 1/4"-12 x 4.500	4 1/2"-12 x 4.500	4 1/4"-12 x 4.500	4 1/4"-12 x 8.250	5.249	6.200	1.000	.375	3.875																		7.062	6.000			2.250	9.938	3.437
	5.000	3 1/2"-12 x 5.000	5"-12 x 5.000	4 3/4"-12 x 5.000	4 3/4"-12 x 9.000	5.749	6.700	1.000	.375	4.250																		7.562	6.500			2.250	9.938	3.437
	5.500	4"-12 x 5.500	5 1/2"-12 x 5.500	5 1/4"-12 x 5.500	5 1/4"-12 x 10.000	6.249	7.125	1.000	.375	4.625																		7.938	7.000			2.250	9.938	3.437
12.000	2.000	1 1/2"-12 x 2.250	2"-12 x 2.250	1 3/4"-12 x 2.250	1 3/4"-12 x 3.500	2.624	3.812	.875	.312	1.688	12.750	1	---	---	1.3125	.625	3.312	.625	2.250	2.000	.875	1.062	6.875	12.450	4.750	9.405	.812	4.312	3.750	9.500	.750	2.000	10.188	3.187
	2.500	1 7/8"-12 x 3.000	2 1/2"-12 x 3.000	2 1/4"-12 x 3.000	2 1/4"-12 x 4.500	3.124	3.812	1.000	.312	2.062																		4.312	3.750			2.250	10.438	3.437
	3.000	2 1/4"-12 x 3.500	3"-12 x 3.500	2 3/4"-12 x 3.500	2 3/4"-12 x 5.500	3.749	4.700	1.000	.375	2.625																		5.562	4.500			2.250	10.438	3.437
	3.500	2 1/2"-12 x 3.500	3 1/2"-12 x 3.500	3 1/4"-12 x 3.500	3 1/4"-12 x 6.500	4.249	5.200	1.000	.375	3.000																		6.062	5.000			2.250	10.438	3.437
	4.000	3"-12 x 4.000	4"-12 x 4.000	3 3/4"-12 x 4.000	3 3/4"-12 x 7.500	4.749	5.700	1.000	.375	3.375																		6.562	5.500			2.250	10.438	3.437
	4.500	3 1/4"-12 x 4.500	4 1/2"-12 x 4.500	4 1/4"-12 x 4.500	4 1/4"-12 x 8.250	5.249	6.200	1.000	.375	3.875																		7.062	6.000			2.250	10.438	3.437
	5.000	3 1/2"-12 x 5.000	5"-12 x 5.000	4 3/4"-12 x 5.000	4 3/4"-12 x 9.000	5.749	6.700	1.000	.375	4.250																		7.562	6.500			2.250	10.438	3.437
	5.500	4"-12 x 5.500	5 1/2"-12 x 5.500	5 1/4"-12 x 5.500	5 1/4"-12 x 10.000	6.249	7.125	1.000	.375	4.625																		7.938	7.000			2.250	10.438	3.437
14.000	2.500	1 7/8"-12 x 3.000	2 1/2"-12 x 3.000	2 1/4"-12 x 3.000	2 1/4"-12 x 4.500	3.124	3.812		.312	2.062	14.750	1 1/4	---	---	1.500	.750	3.812	.625	2.750	2.250	1.000	1.250	8.125	14.450	5.625	10.889	.938	4.312	3.750	11.125	.875	2.250	11.875	3.688
	3.000	2 1/4"-12 x 3.500	3"-12 x 3.500	2 3/4"-12 x 3.500	2 3/4"-12 x 5.500	3.749	4.700		.375	2.625																		5.562	4.500					
	3.500	2 1/2"-12 x 3.500	3 1/2"-12 x 3.500	3 1/4"-12 x 3.500	3 1/4"-12 x 6.500	4.249	5.200		.375	3.000																		6.062	5.000					
	4.000	3"-12 x 4.000	4"-12 x 4.000	3 3/4"-12 x 4.000	3 3/4"-12 x 7.500	4.749	5.700	1.000	.375	3.375																		6.562	5.500					
	4.500	3 1/4"-12 x 4.500	4 1/2"-12 x 4.500	4 1/4"-12 x 4.500	4 1/4"-12 x 8.250	5.249	6.200		.375	3.875																		7.062	6.000					
	5.000	3 1/2"-12 x 5.000	5"-12 x 5.000	4 3/4"-12 x 5.000	4 3/4"-12 x 9.000	5.749	6.700		.375	4.250																		7.562	6.500					
	5.500	4"-12 x 5.500	5 1/2"-12 x 5.500	5 1/4"-12 x 5.500	5 1/4"-12 x 10.000	6.249	7.125		.375	4.625																		7.938	7.000					
BORE	MM	KM & KF	KD	KI	KA	B	BC	C	CS	D	E	EE	EG	EK	EL	EO	ET	F	G	J	K	KN	LB	OD	P	R	RB	RR	RS	SE	TR	WB	XE	Y

FILE: 1.14_MH14L2.dwg REV: 02/09/2010

27650 Groesbeck Hwy • Roseville, MI 48066-2759 • Phone 586.775.7211 • Fax 586.775.4545 • Toll Free 800.526.7968 • e-mail: sales@peninsularcylinders.com • www.peninsularcylinders.com

CENTERLINE LUGS

Heavy Duty Steel Air Cylinder

Peninsular Mounting Style: **MH 15**

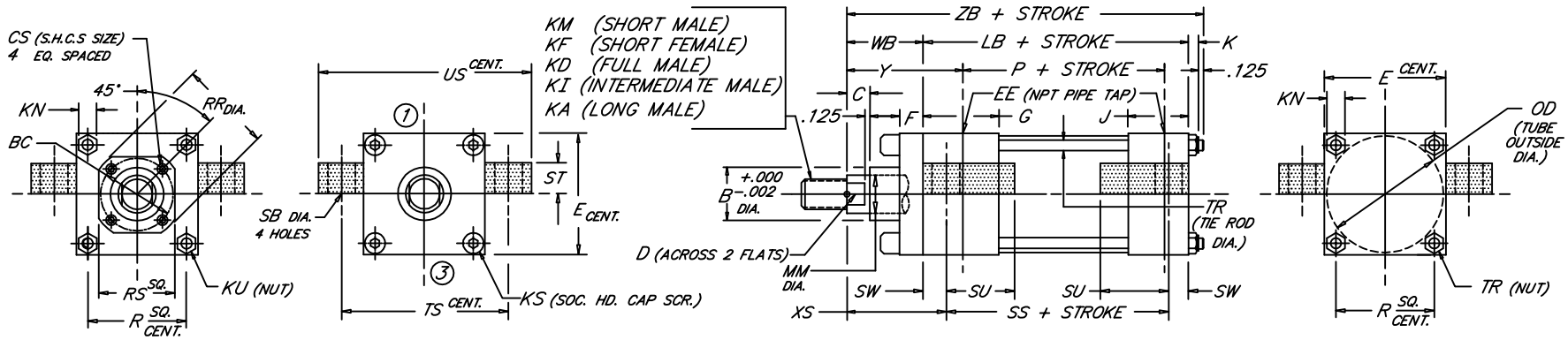

BORE	MM	KM & KF	KD	KI	KA	B	BC	C	CS	D	E	EE	F	G	J	K	KN	KS	KU	LB	OD	P	R	RR	RS	SB	SS	ST	SU	SW	TR	TS	US	WB	XS	Y	ZB
	ROD	ROD THREAD X LENGTH										NPT																								
1.500	.625	7/16"-20 x .750	5/8"-18 x .750	1/2"-20 x .750	1/2"-20 x 1.125	1.124	---	.375	---	.500	2.000	3/8	.375	1.500	1.000	.312	.438	.250	---	3.625	1.750	2.335	1.428	---	---	.438	2.875	.500	.938	.375	.250	2.750	3.500	1.000	1.375	1.875	5.062
	1.000	3/4"-16 x 1.125	1"-14 x 1.125	7/8"-14 x 1.125	7/8"-14 x 1.875	1.499		.500		.875																								1.375	1.750	2.250	5.437
2.000	.625	7/16"-20 x .750	5/8"-18 x .750	1/2"-20 x .750	1/2"-20 x 1.125	1.124	---	.375	---	.500	2.500	3/8	.375	1.500	1.000	.344	.500	.312	---	3.625	2.250	2.335	1.838	---	---	.438	2.875	.500	.938	.375	.312	3.250	4.000	1.000	1.375	1.875	5.094
	1.000	3/4"-16 x 1.125	1"-14 x 1.125	7/8"-14 x 1.125	7/8"-14 x 1.875	1.499		.500		.875																								1.375	1.750	2.250	5.469
	1.375	1"-14 x 1.625	1 3/8"-12 x 1.625	1 1/4"-12 x 1.625	1 1/4"-12 x 2.500	1.999		.625		1.125																								1.625	2.000	2.500	5.719
2.500	.625	7/16"-20 x .750	5/8"-18 x .750	1/2"-20 x .750	1/2"-20 x 1.125	1.124	---	.375	---	.500	3.000	3/8	.375	1.500	1.000	.344	.500	.312	---	3.750	2.750	2.460	2.192	---	---	.438	3.000	.500	.938	.375	.312	3.750	4.500	1.000	1.375	1.875	5.219
	1.000	3/4"-16 x 1.125	1"-14 x 1.125	7/8"-14 x 1.125	7/8"-14 x 1.875	1.499		.500		.875																								1.375	1.750	2.250	5.594
	1.375	1"-14 x 1.625	1 3/8"-12 x 1.625	1 1/4"-12 x 1.625	1 1/4"-12 x 2.500	1.999		.625		1.125																								1.625	2.000	2.500	5.844
	1.750	1 1/4"-12 x 2.000	1 3/4"-12 x 2.000	1 1/2"-12 x 2.000	1 1/2"-12 x 3.000	2.374		.750		1.500																								1.875	2.250	2.750	6.094
3.250	1.000	3/4"-16 x 1.125	1"-14 x 1.125	7/8"-14 x 1.125	7/8"-14 x 1.875	1.499	---	.500	---	.875	3.750	1/2	.625	1.750	1.250	.438	.562	.375	---	4.250	3.500	2.750	2.758	---	---	.562	3.250	.750	1.250	.500	.375	4.750	5.750	1.375	1.875	2.375	6.188
	1.375	1"-14 x 1.625	1 3/8"-12 x 1.625	1 1/4"-12 x 1.625	1 1/4"-12 x 2.500	1.999		.625		1.125																								1.625	2.125	2.625	6.438
	1.750	1 1/4"-12 x 2.000	1 3/4"-12 x 2.000	1 1/2"-12 x 2.000	1 1/2"-12 x 3.000	2.374		.750		1.500																								1.875	2.375	2.875	6.688
	2.000	1 1/2"-12 x 2.250	2"-12 x 2.250	1 3/4"-12 x 2.250	1 3/4"-12 x 3.500	2.624		.875		1.688																								2.000	2.500	3.000	6.813
4.000	1.000	3/4"-16 x 1.125	1"-14 x 1.125	7/8"-14 x 1.125	7/8"-14 x 1.875	1.499	2.562	.500	.250	.875	4.500	1/2	.625	1.750	1.250	.438	.562	---	.375	4.250	4.250	2.750	3.323	2.969	2.500	.562	3.250	.750	1.250	.500	.375	5.500	6.500	1.375	1.875	2.375	6.188
	1.375	1"-14 x 1.625	1 3/8"-12 x 1.625	1 1/4"-12 x 1.625	1 1/4"-12 x 2.500	1.999	2.562	.625	.250	1.125								---	.375					2.969	2.500									1.625	2.125	2.625	6.438
	1.750	1 1/4"-12 x 2.000	1 3/4"-12 x 2.000	1 1/2"-12 x 2.000	1 1/2"-12 x 3.000	2.374	3.267	.750	.312	1.500								---	.375					3.734	3.000									1.875	2.375	2.875	6.688
	2.000	1 1/2"-12 x 2.250	2"-12 x 2.250	1 3/4"-12 x 2.250	1 3/4"-12 x 3.500	2.624	---	.875	---	1.688								.375	---					---	---									2.000	2.500	3.000	6.813
	2.500	1 7/8"-12 x 3.000	2 1/2"-12 x 3.000	2 1/4"-12 x 3.000	2 1/4"-12 x 4.500	3.124	---	1.000	---	2.062								.375	---					---	---									2.250	2.750	3.250	7.063
5.000	1.000	3/4"-16 x 1.125	1"-14 x 1.125	7/8"-14 x 1.125	7/8"-14 x 1.875	1.499	2.562	.500	.250	.875	5.500	1/2	.625	1.750	1.250	.594	.750	---	.500	4.500	5.250	3.000	4.101	2.969	2.500	.812	3.125	1.000	1.562	.6875	.500	6.875	8.250	1.375	2.062	2.375	6.594
	1.375	1"-14 x 1.625	1 3/8"-12 x 1.625	1 1/4"-12 x 1.625	1 1/4"-12 x 2.500	1.999	2.562	.625	.250	1.125								---	.500					2.969	2.500									1.625	2.312	2.625	6.844
	1.750	1 1/4"-12 x 2.000	1 3/4"-12 x 2.000	1 1/2"-12 x 2.000	1 1/2"-12 x 3.000	2.374	3.267	.750	.312	1.500								---	.500					3.734	3.000									1.875	2.562	2.875	7.094
	2.000	1 1/2"-12 x 2.250	2"-12 x 2.250	1 3/4"-12 x 2.250	1 3/4"-12 x 3.500	2.624	3.812	.875	.312	1.688								---	.500					4.312	3.750									2.000	2.688	3.000	7.219
	2.500	1 7/8"-12 x 3.000	2 1/2"-12 x 3.000	2 1/4"-12 x 3.000	2 1/4"-12 x 4.500	3.124	3.812	1.000	.312	2.062								---	.500					4.312	3.750									2.250	2.938	3.250	7.469
	3.000	2 1/4"-12 x 3.500	3"-12 x 3.500	2 3/4"-12 x 3.500	2 3/4"-12 x 5.500	3.749	---	1.000	---	2.625								.500	---					---	---									2.250	2.938	3.250	7.469
	3.500	2 1/2"-12 x 3.500	3 1/2"-12 x 3.500	3 1/4"-12 x 3.500	3 1/4"-12 x 6.500	4.249	---	1.000	---	3.000								.500	---					---	---									2.250	2.938	3.250	7.469
6.000	1.375	1"-14 x 1.625	1 3/8"-12 x 1.625	1 1/4"-12 x 1.625	1 1/4"-12 x 2.500	1.999	3.267	.625	.312	1.125	6.500	3/4	.625	2.000	1.500	.594	.750	---	.500	5.000	6.250	3.250	4.879	3.734	3.000	.812	3.625	1.000	1.562	.6875	.500	7.875	9.250	1.625	2.312	2.750	7.344
	1.750	1 1/4"-12 x 2.000	1 3/4"-12 x 2.000	1 1/2"-12 x 2.000	1 1/2"-12 x 3.000	2.374	3.267	.750	.312	1.500			.625					---	.500					3.734	3.000									1.875	2.562	3.000	7.594
	2.000	1 1/2"-12 x 2.250	2"-12 x 2.250	1 3/4"-12 x 2.250	1 3/4"-12 x 3.500	2.624	3.812	.875	.312	1.688			.625					---	.500					4.312	3.750									2.000	2.688	3.125	7.719
	2.500	1 7/8"-12 x 3.000	2 1/2"-12 x 3.000	2 1/4"-12 x 3.000	2 1/4"-12 x 4.500	3.124	3.812	1.000	.312	2.062			.625					---	.500					4.312	3.750									2.250	2.938	3.375	7.969
	3.000	2 1/4"-12 x 3.500	3"-12 x 3.500	2 3/4"-12 x 3.500	2 3/4"-12 x 5.500	3.749	4.700	1.000	.375	2.625			.625					---	.500					5.562	4.500									2.250	2.938	3.375	7.969
	3.500	2 1/2"-12 x 3.500	3 1/2"-12 x 3.500	3 1/4"-12 x 3.500	3 1/4"-12 x 6.500	4.249	5.200	1.000	.375	3.000			.625					---	.500					6.062	5.000									2.250	2.938	3.375	7.969
	4.000	3"-12 x 4.000	4"-12 x 4.000	3 3/4"-12 x 4.000	3 3/4"-12 x 7.500	4.749	---	1.000	---	3.375			.750					.500	---					---	---									2.250	2.938	3.375	7.969
BORE	MM	KM & KF	KD	KI	KA	B	BC	C	CS	D	E	EE	F	G	J	K	KN	KS	KU	LB	OD	P	R	RR	RS	SB	SS	ST	SU	SW	TR	TS	US	WB	XS	Y	ZB

FILE: 1.15_MH15S2.dwg REV: 02/09/2010

27650 Groesbeck Hwy • Roseville, MI 48066-2759 • Phone 586.775.7211 • Fax 586.775.4545 • Toll Free 800.526.7968 • e-mail: sales@peninsularcylinders.com • www.peninsularcylinders.com

CENTERLINE LUGS

Heavy Duty Steel Air Cylinder

Peninsular Mounting Style: **MH 15**

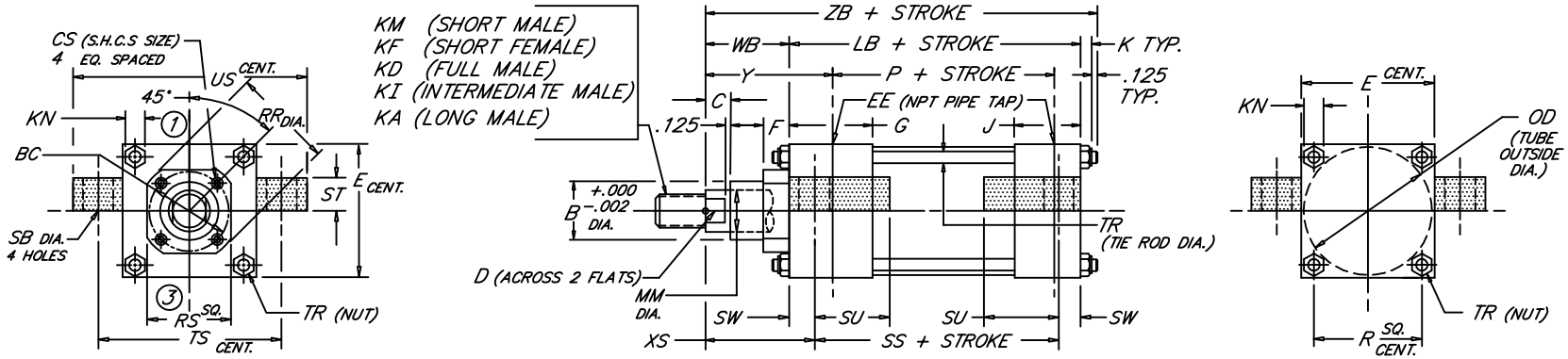

BORE	ROD MM	KM & KF	KD	KI	KA	B	BC	C	CS	D	E	EE (NPT)	F	G	J	K	KN	LB	OD	P	R	RR	RS	SB	SS	ST	SU	SW	TR	TS	US	WB	XS	Y	ZB
		ROD THREAD X LENGTH																																
8.000	1.375	1"-14 x 1.625	1 3/8"-12 x 1.625	1 1/4"-12 x 1.625	1 1/4"-12 x 2.500	1.999	3.267	.625	.312	1.125	8.500	3/4	.625	2.000	1.500	.750	.938	5.125	8.450	3.375	6.435	3.734	3.000	.812	3.750	1.000	1.562	.6875	.625	9.875	11.250	1.625	2.313	2.750	7.625
	1.750	1 1/4"-12 x 2.000	1 3/4"-12 x 2.000	1 1/2"-12 x 2.000	1 1/2"-12 x 3.000	2.374	3.267	.750	.312	1.500												3.734	3.000									1.875	2.562	3.000	7.875
	2.000	1 1/2"-12 x 2.250	2"-12 x 2.250	1 3/4"-12 x 2.250	1 3/4"-12 x 3.500	2.624	3.812	.875	.312	1.688												4.312	3.750									2.000	2.688	3.125	8.000
	2.500	1 7/8"-12 x 3.000	2 1/2"-12 x 3.000	2 1/4"-12 x 3.000	2 1/4"-12 x 4.500	3.124	3.812	1.000	.312	2.062												4.312	3.750									2.250	2.938	3.375	8.250
	3.000	2 1/4"-12 x 3.500	3"-12 x 3.500	2 3/4"-12 x 3.500	2 3/4"-12 x 5.500	3.749	4.700	1.000	.375	2.625												5.562	4.500									2.250	2.938	3.375	8.250
	3.500	2 1/2"-12 x 3.500	3 1/2"-12 x 3.500	3 1/4"-12 x 3.500	3 1/4"-12 x 6.500	4.249	5.200	1.000	.375	3.000												6.062	5.000									2.250	2.938	3.375	8.250
	4.000	3"-12 x 4.000	4"-12 x 4.000	3 3/4"-12 x 4.000	3 3/4"-12 x 7.500	4.749	5.700	1.000	.375	3.375												6.562	5.500									2.250	2.938	3.375	8.250
	4.500	3 1/4"-12 x 4.500	4 1/2"-12 x 4.500	4 1/4"-12 x 4.500	4 1/4"-12 x 8.250	5.249	6.200	1.000	.375	3.875												7.062	6.000									2.250	2.938	3.375	8.250
	5.000	3 1/2"-12 x 5.000	5"-12 x 5.000	4 3/4"-12 x 5.000	4 3/4"-12 x 9.000	5.749	6.700	1.000	.375	4.250												7.562	6.500									2.250	2.938	3.375	8.250
	5.500	4"-12 x 5.500	5 1/2"-12 x 5.500	5 1/4"-12 x 5.500	5 1/4"-12 x 10.000	6.249	7.125	1.000	.375	4.625												7.938	7.000									2.250	2.938	3.375	8.250
10.000	1.750	1 1/4"-12 x 2.000	1 3/4"-12 x 2.000	1 1/2"-12 x 2.000	1 1/2"-12 x 3.000	2.374	3.812	.750	.312	1.500	10.625	1	.625	2.250	2.000	.875	1.062	6.375	10.450	4.250	7.920	4.312	3.750	1.062	4.625	1.250	2.000	.875	.750	12.375	14.125	1.875	2.750	3.062	9.250
	2.000	1 1/2"-12 x 2.250	2"-12 x 2.250	1 3/4"-12 x 2.250	1 3/4"-12 x 3.500	2.624	3.812	.875	.312	1.688												4.312	3.750									2.000	2.875	3.187	9.375
	2.500	1 7/8"-12 x 3.000	2 1/2"-12 x 3.000	2 1/4"-12 x 3.000	2 1/4"-12 x 4.500	3.124	3.812	1.000	.312	2.062												4.312	3.750									2.250	3.125	3.437	9.625
	3.000	2 1/4"-12 x 3.500	3"-12 x 3.500	2 3/4"-12 x 3.500	2 3/4"-12 x 5.500	3.749	4.700	1.000	.375	2.625												5.562	4.500									2.250	3.125	3.437	9.625
	3.500	2 1/2"-12 x 3.500	3 1/2"-12 x 3.500	3 1/4"-12 x 3.500	3 1/4"-12 x 6.500	4.249	5.200	1.000	.375	3.000												6.062	5.000									2.250	3.125	3.437	9.625
	4.000	3"-12 x 4.000	4"-12 x 4.000	3 3/4"-12 x 4.000	3 3/4"-12 x 7.500	4.749	5.700	1.000	.375	3.375												6.562	5.500									2.250	3.125	3.437	9.625
	4.500	3 1/4"-12 x 4.500	4 1/2"-12 x 4.500	4 1/4"-12 x 4.500	4 1/4"-12 x 8.250	5.249	6.200	1.000	.375	3.875												7.062	6.000									2.250	3.125	3.437	9.625
	5.000	3 1/2"-12 x 5.000	5"-12 x 5.000	4 3/4"-12 x 5.000	4 3/4"-12 x 9.000	5.749	6.700	1.000	.375	4.250												7.562	6.500									2.250	3.125	3.437	9.625
	5.500	4"-12 x 5.500	5 1/2"-12 x 5.500	5 1/4"-12 x 5.500	5 1/4"-12 x 10.000	6.249	7.125	1.000	.375	4.625												7.938	7.000									2.250	3.125	3.437	9.625
12.000	2.000	1 1/2"-12 x 2.250	2"-12 x 2.250	1 3/4"-12 x 2.250	1 3/4"-12 x 3.500	2.624	3.812	.875	.312	1.688	12.750	1	.625	2.250	2.000	.875	1.062	6.875	12.450	4.750	9.405	4.312	3.750	1.062	5.125	1.250	2.000	.875	.750	14.500	16.250	2.000	2.875	3.187	9.875
	2.500	1 7/8"-12 x 3.000	2 1/2"-12 x 3.000	2 1/4"-12 x 3.000	2 1/4"-12 x 4.500	3.124	3.812	1.000	.312	2.062												4.312	3.750									2.250	3.125	3.437	10.125
	3.000	2 1/4"-12 x 3.500	3"-12 x 3.500	2 3/4"-12 x 3.500	2 3/4"-12 x 5.500	3.749	4.700	1.000	.375	2.625												5.562	4.500									2.250	3.125	3.437	10.125
	3.500	2 1/2"-12 x 3.500	3 1/2"-12 x 3.500	3 1/4"-12 x 3.500	3 1/4"-12 x 6.500	4.249	5.200	1.000	.375	3.000												6.062	5.000									2.250	3.125	3.437	10.125
	4.000	3"-12 x 4.000	4"-12 x 4.000	3 3/4"-12 x 4.000	3 3/4"-12 x 7.500	4.749	5.700	1.000	.375	3.375												6.562	5.500									2.250	3.125	3.437	10.125
	4.500	3 1/4"-12 x 4.500	4 1/2"-12 x 4.500	4 1/4"-12 x 4.500	4 1/4"-12 x 8.250	5.249	6.200	1.000	.375	3.875												7.062	6.000									2.250	3.125	3.437	10.125
	5.000	3 1/2"-12 x 5.000	5"-12 x 5.000	4 3/4"-12 x 5.000	4 3/4"-12 x 9.000	5.749	6.700	1.000	.375	4.250												7.562	6.500									2.250	3.125	3.437	10.125
	5.500	4"-12 x 5.500	5 1/2"-12 x 5.500	5 1/4"-12 x 5.500	5 1/4"-12 x 10.000	6.249	7.125	1.000	.375	4.625												7.938	7.000									2.250	3.125	3.437	10.125
14.000	2.500	1 7/8"-12 x 3.000	2 1/2"-12 x 3.000	2 1/4"-12 x 3.000	2 1/4"-12 x 4.500	3.124	3.812		.312	2.062	14.750	1 1/4	.625	2.750	2.250	1.000	1.250	8.125	14.450	5.625	10.889	4.312	3.750	1.312	5.875	1.500	2.500	1.125	.875	17.000	19.250	2.250	3.375	3.688	11.500
	3.000	2 1/4"-12 x 3.500	3"-12 x 3.500	2 3/4"-12 x 3.500	2 3/4"-12 x 5.500	3.749	4.700		.375	2.625												5.562	4.500												
	3.500	2 1/2"-12 x 3.500	3 1/2"-12 x 3.500	3 1/4"-12 x 3.500	3 1/4"-12 x 6.500	4.249	5.200		.375	3.000												6.062	5.000												
	4.000	3"-12 x 4.000	4"-12 x 4.000	3 3/4"-12 x 4.000	3 3/4"-12 x 7.500	4.749	5.700	1.000	.375	3.375												6.562	5.500												
	4.500	3 1/4"-12 x 4.500	4 1/2"-12 x 4.500	4 1/4"-12 x 4.500	4 1/4"-12 x 8.250	5.249	6.200		.375	3.875												7.062	6.000												
	5.000	3 1/2"-12 x 5.000	5"-12 x 5.000	4 3/4"-12 x 5.000	4 3/4"-12 x 9.000	5.749	6.700		.375	4.250												7.562	6.500												
	5.500	4"-12 x 5.500	5 1/2"-12 x 5.500	5 1/4"-12 x 5.500	5 1/4"-12 x 10.000	6.249	7.125		.375	4.625												7.938	7.000												
BORE	MM	KM & KF	KD	KI	KA	B	BC	C	CS	D	E	EE	F	G	J	K	KN	LB	OD	P	R	RR	RS	SB	SS	ST	SU	SW	TR	TS	US	WB	XS	Y	ZB

FILE: 1.15_MH15L2.dwg REV: 02/09/2010

27650 Groesbeck Hwy • Roseville, MI 48066-2759 • Phone 586.775.7211 • Fax 586.775.4545 • Toll Free 800.526.7968 • e-mail: sales@peninsularcylinders.com • www.peninsularcylinders.com

SIDE TAPPED

Heavy Duty Steel Air Cylinder

Peninsular Mounting Style: **MH 16**

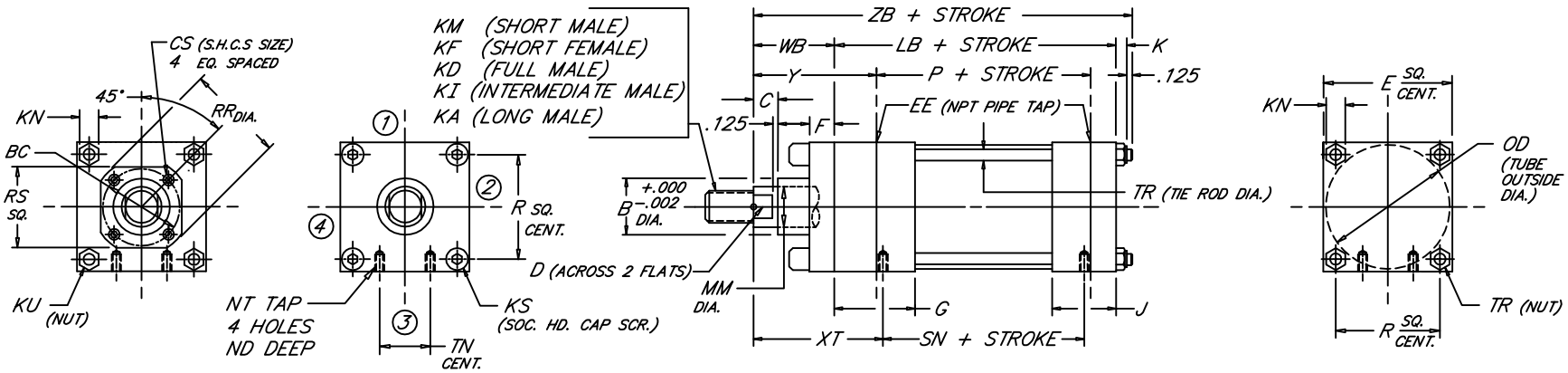

BORE	MM	ROD: KM & KF	ROD THREAD X LENGTH: KD	KI	KA	B	BC	C	CS	D	E	NPT: EE	F	G	J	K	KN	KS	KU	LB	ND	NT	OD	P	R	RR	RS	SN	TN	TR	WB	XT	Y	ZB
1.500	.625	7/16"-20 x .750	5/8"-18 x .750	1/2"-20 x .750	1/2"-20 x 1.125	1.124	---	.375	---	.500	2.000	3/8	.375	1.500	1.000	.312	.438	.250	---	3.625	.375	1/4"-20	1.750	2.335	1.428	---	---	2.250	.625	.250	1.000	1.938	1.875	5.062
	1.000	3/4"-16 x 1.125	1"-14 x 1.125	7/8"-14 x 1.125	7/8"-14 x 1.875	1.499		.500		.875											.281										1.375	2.312	2.250	5.437
2.000	.625	7/16"-20 x .750	5/8"-18 x .750	1/2"-20 x .750	1/2"-20 x 1.125	1.124	---	.375	---	.500	2.500	3/8	.375	1.500	1.000	.344	.500	.312	---	3.625	.344	5/16"-18	2.250	2.335	1.838	---	---	2.250	.875	.312	1.000	1.938	1.875	5.094
	1.000	3/4"-16 x 1.125	1"-14 x 1.125	7/8"-14 x 1.125	7/8"-14 x 1.875	1.499		.500		.875																					1.375	2.312	2.250	5.469
	1.375	1"-14 x 1.625	1 3/8"-12 x 1.625	1 1/4"-12 x 1.625	1 1/4"-12 x 2.500	1.999		.625		1.125																					1.625	2.562	2.500	5.719
2.500	.625	7/16"-20 x .750	5/8"-18 x .750	1/2"-20 x .750	1/2"-20 x 1.125	1.124	---	.375	---	.500	3.000	3/8	.375	1.500	1.000	.344	.500	.312	---	3.750	.438	3/8"-16	2.750	2.460	2.192	---	---	2.375	1.250	.312	1.000	1.938	1.875	5.219
	1.000	3/4"-16 x 1.125	1"-14 x 1.125	7/8"-14 x 1.125	7/8"-14 x 1.875	1.499		.500		.875																					1.375	2.312	2.250	5.594
	1.375	1"-14 x 1.625	1 3/8"-12 x 1.625	1 1/4"-12 x 1.625	1 1/4"-12 x 2.500	1.999		.625		1.125																					1.625	2.562	2.500	5.844
	1.750	1 1/4"-12 x 2.000	1 3/4"-12 x 2.000	1 1/2"-12 x 2.000	1 1/2"-12 x 3.000	2.374		.750		1.500																					1.875	2.812	2.750	6.094
3.250	1.000	3/4"-16 x 1.125	1"-14 x 1.125	7/8"-14 x 1.125	7/8"-14 x 1.875	1.499	---	.500	---	.875	3.750	1/2	.625	1.750	1.250	.438	.562	.375	---	4.250	.500	1/2"-13	3.500	2.750	2.758	---	---	2.625	1.500	.375	1.375	2.438	2.375	6.188
	1.375	1"-14 x 1.625	1 3/8"-12 x 1.625	1 1/4"-12 x 1.625	1 1/4"-12 x 2.500	1.999		.625		1.125																					1.625	2.688	2.625	6.438
	1.750	1 1/4"-12 x 2.000	1 3/4"-12 x 2.000	1 1/2"-12 x 2.000	1 1/2"-12 x 3.000	2.374		.750		1.500																					1.875	2.938	2.875	6.688
	2.000	1 1/2"-12 x 2.250	2"-12 x 2.250	1 3/4"-12 x 2.250	1 3/4"-12 x 3.500	2.624		.875		1.688																					2.000	3.062	3.000	6.813
4.000	1.000	3/4"-16 x 1.125	1"-14 x 1.125	7/8"-14 x 1.125	7/8"-14 x 1.875	1.499	2.562	.500	.250	.875	4.500	1/2	.625	1.750	1.250	.438	.562	---	.375	4.250	.625	1/2"-13	4.250	2.750	3.323	2.969	2.500	2.625	2.062	.375	1.375	2.438	2.375	6.188
	1.375	1"-14 x 1.625	1 3/8"-12 x 1.625	1 1/4"-12 x 1.625	1 1/4"-12 x 2.500	1.999	2.562	.625	.250	1.125								---	.375							2.969	2.500				1.625	2.688	2.625	6.438
	1.750	1 1/4"-12 x 2.000	1 3/4"-12 x 2.000	1 1/2"-12 x 2.000	1 1/2"-12 x 3.000	2.374	3.267	.750	.312	1.500								---	.375							3.734	3.000				1.875	2.938	2.875	6.688
	2.000	1 1/2"-12 x 2.250	2"-12 x 2.250	1 3/4"-12 x 2.250	1 3/4"-12 x 3.500	2.624	---	.875	---	1.688								.375	---							---	---				2.000	3.062	3.000	6.813
	2.500	1 7/8"-12 x 3.000	2 1/2"-12 x 3.000	2 1/4"-12 x 3.000	2 1/4"-12 x 4.500	3.124	---	1.000	---	2.062								.375	---							---	---				2.250	3.312	3.250	7.063
5.000	1.000	3/4"-16 x 1.125	1"-14 x 1.125	7/8"-14 x 1.125	7/8"-14 x 1.875	1.499	2.562	.500	.250	.875	5.500	1/2	.625	1.750	1.250	.594	.750	---	.500	4.500	.750	5/8"-11	5.250	3.000	4.101	2.969	2.500	2.875	2.688	.500	1.375	2.438	2.375	6.594
	1.375	1"-14 x 1.625	1 3/8"-12 x 1.625	1 1/4"-12 x 1.625	1 1/4"-12 x 2.500	1.999	2.562	.625	.250	1.125								---	.500							2.969	2.500				1.625	2.688	2.625	6.844
	1.750	1 1/4"-12 x 2.000	1 3/4"-12 x 2.000	1 1/2"-12 x 2.000	1 1/2"-12 x 3.000	2.374	3.267	.750	.312	1.500								---	.500							3.734	3.000				1.875	2.938	2.875	7.094
	2.000	1 1/2"-12 x 2.250	2"-12 x 2.250	1 3/4"-12 x 2.250	1 3/4"-12 x 3.500	2.624	3.812	.875	.312	1.688								---	.500							4.312	3.750				2.000	3.062	3.000	7.219
	2.500	1 7/8"-12 x 3.000	2 1/2"-12 x 3.000	2 1/4"-12 x 3.000	2 1/4"-12 x 4.500	3.124	3.812	1.000	.312	2.062								---	.500							4.312	3.750				2.250	3.312	3.250	7.469
	3.000	2 1/4"-12 x 3.500	3"-12 x 3.500	2 3/4"-12 x 3.500	2 3/4"-12 x 5.500	3.749	---	1.000	---	2.625								.500	---							---	---				2.250	3.312	3.250	7.469
	3.500	2 1/2"-12 x 3.500	3 1/2"-12 x 3.500	3 1/4"-12 x 3.500	3 1/4"-12 x 6.500	4.249	---	1.000	---	3.000								.500	---							---	---				2.250	3.312	3.250	7.469
6.000	1.375	1"-14 x 1.625	1 3/8"-12 x 1.625	1 1/4"-12 x 1.625	1 1/4"-12 x 2.500	1.999	3.267	.625	.312	1.125	6.500	3/4	.625	2.000	1.500	.594	.750	---	.500	5.000	.875	3/4"-10	6.250	3.250	4.879	3.734	3.000	3.125	3.250	.500	1.625	2.812	2.750	7.344
	1.750	1 1/4"-12 x 2.000	1 3/4"-12 x 2.000	1 1/2"-12 x 2.000	1 1/2"-12 x 3.000	2.374	3.267	.750	.312	1.500			.625					---	.500							3.734	3.000				1.875	3.062	3.000	7.594
	2.000	1 1/2"-12 x 2.250	2"-12 x 2.250	1 3/4"-12 x 2.250	1 3/4"-12 x 3.500	2.624	3.812	.875	.312	1.688			.625					---	.500							4.312	3.750				2.000	3.188	3.125	7.719
	2.500	1 7/8"-12 x 3.000	2 1/2"-12 x 3.000	2 1/4"-12 x 3.000	2 1/4"-12 x 4.500	3.124	3.812	1.000	.312	2.062			.625					---	.500							4.312	3.750				2.250	3.438	3.375	7.969
	3.000	2 1/4"-12 x 3.500	3"-12 x 3.500	2 3/4"-12 x 3.500	2 3/4"-12 x 5.500	3.749	4.700	1.000	.375	2.625			.625					---	.500							5.562	4.500				2.250	3.438	3.375	7.969
	3.500	2 1/2"-12 x 3.500	3 1/2"-12 x 3.500	3 1/4"-12 x 3.500	3 1/4"-12 x 6.500	4.249	5.200	1.000	.375	3.000			.625					---	.500							6.062	5.000				2.250	3.438	3.375	7.969
	4.000	3"-12 x 4.000	4"-12 x 4.000	3 3/4"-12 x 4.000	3 3/4"-12 x 7.500	4.749	---	1.000	---	3.375			.750					.500	---							---	---				2.250	3.438	3.375	7.969
BORE	MM	KM & KF	KD	KI	KA	B	BC	C	CS	D	E	EE	F	G	J	K	KN	KS	KU	LB	ND	NT	OD	P	R	RR	RS	SN	TN	TR	WB	XT	Y	ZB

FILE: 1.16_MH16S2.dwg REV: 02/09/2010

27650 Groesbeck Hwy • Roseville, MI 48066-2759 • Phone 586.775.7211 • Fax 586.775.4545 • Toll Free 800.526.7968 • e-mail: sales@peninsularcylinders.com • www.peninsularcylinders.com

SIDE TAPPED

Heavy Duty Steel Air Cylinder

Peninsular Mounting Style: **MH 16**

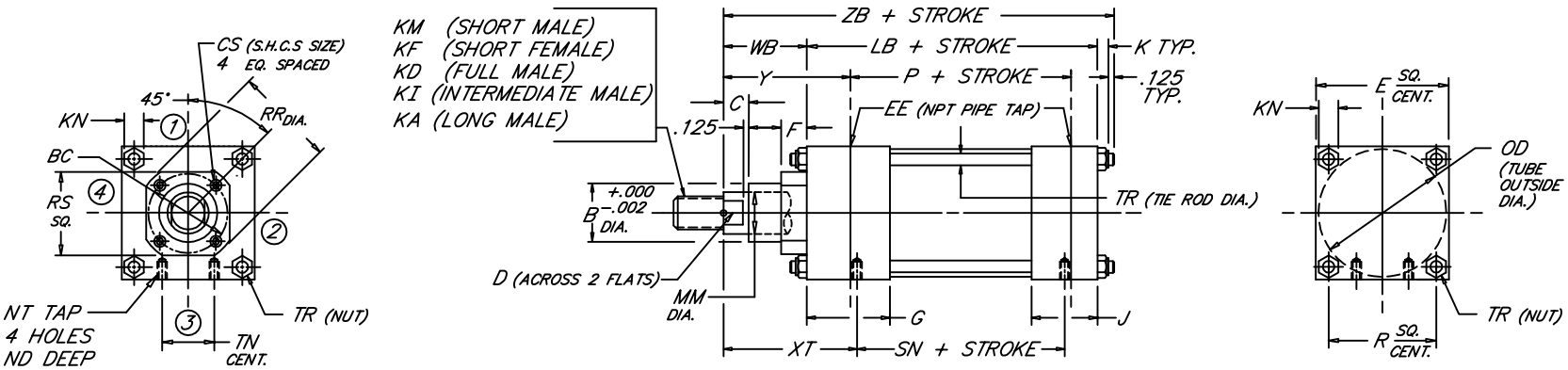

BORE	ROD MM	ROD THREAD X LENGTH KM & KF	KD	KI	KA	B	BC	C	CS	D	E	NPT EE	F	G	J	K	KN	LB	ND	NT	OD	P	R	RR	RS	SN	TN	TR	WB	XT	Y	ZB
8.000	1.375	1"-14 x 1.625	1 3/8"-12 x 1.625	1 1/4"-12 x 1.625	1 1/4"-12 x 2.500	1.999	3.267	.625	.312	1.125	8.500	3/4	.625	2.000	1.500	.750	.938	5.125	1.125	3/4"-10	8.450	3.375	6.435	3.734	3.000	3.250	4.500	.625	1.625	2.812	2.750	7.625
	1.750	1 1/4"-12 x 2.000	1 3/4"-12 x 2.000	1 1/2"-12 x 2.000	1 1/2"-12 x 3.000	2.374	3.267	.750	.312	1.500														3.734	3.000				1.875	3.062	3.000	7.875
	2.000	1 1/2"-12 x 2.250	2"-12 x 2.250	1 3/4"-12 x 2.250	1 3/4"-12 x 3.500	2.624	3.812	.875	.312	1.688														4.312	3.750				2.000	3.188	3.125	8.000
	2.500	1 7/8"-12 x 3.000	2 1/2"-12 x 3.000	2 1/4"-12 x 3.000	2 1/4"-12 x 4.500	3.124	3.812	1.000	.312	2.062														4.312	3.750				2.250	3.438	3.375	8.250
	3.000	2 1/4"-12 x 3.500	3"-12 x 3.500	2 3/4"-12 x 3.500	2 3/4"-12 x 5.500	3.749	4.700	1.000	.375	2.625														5.562	4.500				2.250	3.438	3.375	8.250
	3.500	2 1/2"-12 x 3.500	3 1/2"-12 x 3.500	3 1/4"-12 x 3.500	3 1/4"-12 x 6.500	4.249	5.200	1.000	.375	3.000														6.062	5.000				2.250	3.138	3.375	8.250
	4.000	3"-12 x 4.000	4"-12 x 4.000	3 3/4"-12 x 4.000	3 3/4"-12 x 7.500	4.749	5.700	1.000	.375	3.375														6.562	5.500				2.250	3.438	3.375	8.250
	4.500	3 1/4"-12 x 4.500	4 1/2"-12 x 4.500	4 1/4"-12 x 4.500	4 1/4"-12 x 8.250	5.249	6.200	1.000	.375	3.875														7.062	6.000				2.250	3.438	3.375	8.250
	5.000	3 1/2"-12 x 5.000	5"-12 x 5.000	4 3/4"-12 x 5.000	4 3/4"-12 x 9.000	5.749	6.700	1.000	.375	4.250														7.562	6.500				2.250	3.438	3.375	8.250
	5.500	4"-12 x 5.500	5 1/2"-12 x 5.500	5 1/4"-12 x 5.500	5 1/4"-12 x 10.000	6.249	7.125	1.000	.375	4.625														7.938	7.000				2.250	3.438	3.375	8.250
10.000	1.750	1 1/4"-12 x 2.000	1 3/4"-12 x 2.000	1 1/2"-12 x 2.000	1 1/2"-12 x 3.000	2.374	3.812	.750	.312	1.500	10.625	1	.625	2.250	2.000	.875	1.062	6.375	1.500	1"-8	10.450	4.250	7.920	4.312	3.750	4.125	5.500	.750	1.875	3.125	3.062	9.250
	2.000	1 1/2"-12 x 2.250	2"-12 x 2.250	1 3/4"-12 x 2.250	1 3/4"-12 x 3.500	2.624	3.812	.875	.312	1.688														4.312	3.750				2.000	3.250	3.187	9.375
	2.500	1 7/8"-12 x 3.000	2 1/2"-12 x 3.000	2 1/4"-12 x 3.000	2 1/4"-12 x 4.500	3.124	3.812	1.000	.312	2.062														4.312	3.750				2.250	3.500	3.437	9.625
	3.000	2 1/4"-12 x 3.500	3"-12 x 3.500	2 3/4"-12 x 3.500	2 3/4"-12 x 5.500	3.749	4.700	1.000	.375	2.625														5.562	4.500				2.250	3.500	3.437	9.625
	3.500	2 1/2"-12 x 3.500	3 1/2"-12 x 3.500	3 1/4"-12 x 3.500	3 1/4"-12 x 6.500	4.249	5.200	1.000	.375	3.000														6.062	5.000				2.250	3.500	3.437	9.625
	4.000	3"-12 x 4.000	4"-12 x 4.000	3 3/4"-12 x 4.000	3 3/4"-12 x 7.500	4.749	5.700	1.000	.375	3.375														6.562	5.500				2.250	3.500	3.437	9.625
	4.500	3 1/4"-12 x 4.500	4 1/2"-12 x 4.500	4 1/4"-12 x 4.500	4 1/4"-12 x 8.250	5.249	6.200	1.000	.375	3.875														7.062	6.000				2.250	3.500	3.437	9.625
	5.000	3 1/2"-12 x 5.000	5"-12 x 5.000	4 3/4"-12 x 5.000	4 3/4"-12 x 9.000	5.749	6.700	1.000	.375	4.250														7.562	6.500				2.250	3.500	3.437	9.625
	5.500	4"-12 x 5.500	5 1/2"-12 x 5.500	5 1/4"-12 x 5.500	5 1/4"-12 x 10.000	6.249	7.125	1.000	.375	4.625														7.938	7.000				2.250	3.500	3.437	9.625
12.000	2.000	1 1/2"-12 x 2.250	2"-12 x 2.250	1 3/4"-12 x 2.250	1 3/4"-12 x 3.500	2.624	3.812	.875	.312	1.688	12.750	1	.625	2.250	2.000	.875	1.062	6.875	1.500	1"-8	12.450	4.750	9.405	4.312	3.750	4.625	7.250	.750	2.000	3.250	3.187	9.875
	2.500	1 7/8"-12 x 3.000	2 1/2"-12 x 3.000	2 1/4"-12 x 3.000	2 1/4"-12 x 4.500	3.124	3.812	1.000	.312	2.062														4.312	3.750				2.250	3.500	3.437	10.125
	3.000	2 1/4"-12 x 3.500	3"-12 x 3.500	2 3/4"-12 x 3.500	2 3/4"-12 x 5.500	3.749	4.700	1.000	.375	2.625														5.562	4.500				2.250	3.500	3.437	10.125
	3.500	2 1/2"-12 x 3.500	3 1/2"-12 x 3.500	3 1/4"-12 x 3.500	3 1/4"-12 x 6.500	4.249	5.200	1.000	.375	3.000														6.062	5.000				2.250	3.500	3.437	10.125
	4.000	3"-12 x 4.000	4"-12 x 4.000	3 3/4"-12 x 4.000	3 3/4"-12 x 7.500	4.749	5.700	1.000	.375	3.375														6.562	5.500				2.250	3.500	3.437	10.125
	4.500	3 1/4"-12 x 4.500	4 1/2"-12 x 4.500	4 1/4"-12 x 4.500	4 1/4"-12 x 8.250	5.249	6.200	1.000	.375	3.875														7.062	6.000				2.250	3.500	3.437	10.125
	5.000	3 1/2"-12 x 5.000	5"-12 x 5.000	4 3/4"-12 x 5.000	4 3/4"-12 x 9.000	5.749	6.700	1.000	.375	4.250														7.562	6.500				2.250	3.500	3.437	10.125
	5.500	4"-12 x 5.500	5 1/2"-12 x 5.500	5 1/4"-12 x 5.500	5 1/4"-12 x 10.000	6.249	7.125	1.000	.375	4.625														7.938	7.000				2.250	3.500	3.437	10.125
14.000	2.500	1 7/8"-12 x 3.000	2 1/2"-12 x 3.000	2 1/4"-12 x 3.000	2 1/4"-12 x 4.500	3.124	3.812		.312	2.062	14.750	1 1/4	.625	2.750	2.250	1.000	1.250	8.125	1.875	1 1/4"-7	14.450	5.625	10.889	4.312	3.750	5.500	8.375	.875	2.250	3.812	3.688	11.500
	3.000	2 1/4"-12 x 3.500	3"-12 x 3.500	2 3/4"-12 x 3.500	2 3/4"-12 x 5.500	3.749	4.700		.375	2.625														5.562	4.500							
	3.500	2 1/2"-12 x 3.500	3 1/2"-12 x 3.500	3 1/4"-12 x 3.500	3 1/4"-12 x 6.500	4.249	5.200		.375	3.000														6.062	5.000							
	4.000	3"-12 x 4.000	4"-12 x 4.000	3 3/4"-12 x 4.000	3 3/4"-12 x 7.500	4.749	5.700	1.000	.375	3.375														6.562	5.500							
	4.500	3 1/4"-12 x 4.500	4 1/2"-12 x 4.500	4 1/4"-12 x 4.500	4 1/4"-12 x 8.250	5.249	6.200		.375	3.875														7.062	6.000							
	5.000	3 1/2"-12 x 5.000	5"-12 x 5.000	4 3/4"-12 x 5.000	4 3/4"-12 x 9.000	5.749	6.700		.375	4.250														7.562	6.500							
	5.500	4"-12 x 5.500	5 1/2"-12 x 5.500	5 1/4"-12 x 5.500	5 1/4"-12 x 10.000	6.249	7.125		.375	4.625														7.938	7.000							
BORE	MM	KM & KF	KD	KI	KA	B	BC	C	CS	D	E	EE	F	G	J	K	KN	LB	ND	NT	OD	P	R	RR	RS	SN	TN	TR	WB	XT	Y	ZB

FILE: 1.16_MH16L2.dwg REV: 02/09/2010

27650 Groesbeck Hwy • Roseville, MI 48066-2759 • Phone 586.775.7211 • Fax 586.775.4545 • Toll Free 800.526.7968 • e-mail: sales@peninsularcylinders.com • www.peninsularcylinders.com

HEAD SQUARE FLANGE

Peninsular Mounting Style: **MH 17**

Heavy Duty Steel Air Cylinder

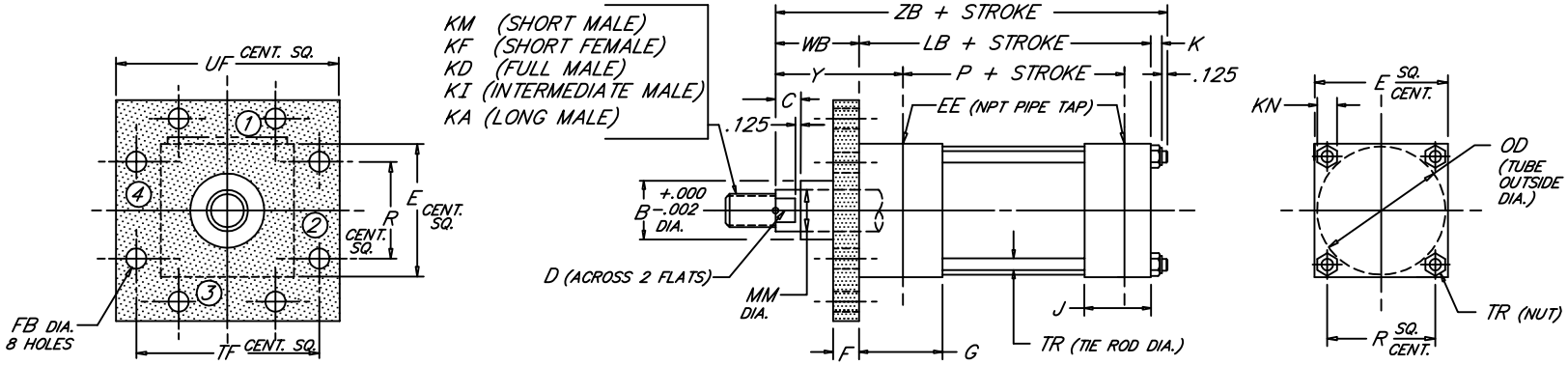

BORE	ROD MM	ROD THREAD X LENGTH KM & KF	KD	KI	KA	B	C	D	E	NPT EE	F	FB	G	J	K	KN	LB	OD	P	R	TF	TR	UF	WB	Y	ZB
1.500	.625	7/16"-20 x .750	5/8"-18 x .750	1/2"-20 x .750	1/2"-20 x 1.125	1.124	.375	.500	2.000	3/8	.375	.312	1.500	1.000	.312	.438	3.625	1.750	2.335	1.428	2.750	.250	3.375	1.000	1.875	5.062
	1.000	3/4"-16 x 1.125	1"-14 x 1.125	7/8"-14 x 1.125	7/8"-14 x 1.875	1.499	.500	.875																1.375	2.250	5.437
2.000	.625	7/16"-20 x .750	5/8"-18 x .750	1/2"-20 x .750	1/2"-20 x 1.125	1.124	.375	.500	2.500	3/8	.375	.375	1.500	1.000	.344	.500	3.625	2.250	2.335	1.838	3.375	.312	4.125	1.000	1.875	5.094
	1.000	3/4"-16 x 1.125	1"-14 x 1.125	7/8"-14 x 1.125	7/8"-14 x 1.875	1.499	.500	.875																1.375	2.250	5.469
	1.375	1"-14 x 1.625	1 3/8"-12 x 1.625	1 1/4"-12 x 1.625	1 1/4"-12 x 2.500	1.999	.625	1.125																1.625	2.500	5.719
2.500	.625	7/16"-20 x .750	5/8"-18 x .750	1/2"-20 x .750	1/2"-20 x 1.125	1.124	.375	.500	3.000	3/8	.375	.375	1.500	1.000	.344	.500	3.750	2.750	2.460	2.192	3.875	.312	4.625	1.000	1.875	5.219
	1.000	3/4"-16 x 1.125	1"-14 x 1.125	7/8"-14 x 1.125	7/8"-14 x 1.875	1.499	.500	.875																1.375	2.250	5.594
	1.375	1"-14 x 1.625	1 3/8"-12 x 1.625	1 1/4"-12 x 1.625	1 1/4"-12 x 2.500	1.999	.625	1.125																1.625	2.500	5.844
	1.750	1 1/4"-12 x 2.000	1 3/4"-12 x 2.000	1 1/2"-12 x 2.000	1 1/2"-12 x 3.000	2.374	.750	1.500																1.875	2.750	6.094
3.250	1.000	3/4"-16 x 1.125	1"-14 x 1.125	7/8"-14 x 1.125	7/8"-14 x 1.875	1.499	.500	.875	3.750	1/2	.625	.438	1.750	1.250	.438	.562	4.250	3.500	2.750	2.758	4.688	.375	5.500	1.375	2.375	6.188
	1.375	1"-14 x 1.625	1 3/8"-12 x 1.625	1 1/4"-12 x 1.625	1 1/4"-12 x 2.500	1.999	.625	1.125																1.625	2.625	6.438
	1.750	1 1/4"-12 x 2.000	1 3/4"-12 x 2.000	1 1/2"-12 x 2.000	1 1/2"-12 x 3.000	2.374	.750	1.500																1.875	2.875	6.688
	2.000	1 1/2"-12 x 2.250	2"-12 x 2.250	1 3/4"-12 x 2.250	1 3/4"-12 x 3.500	2.624	.875	1.688																2.000	3.000	6.813
4.000	1.000	3/4"-16 x 1.125	1"-14 x 1.125	7/8"-14 x 1.125	7/8"-14 x 1.875	1.499	.500	.875	4.500	1/2	.625	.438	1.750	1.250	.438	.562	4.250	4.250	2.750	3.323	5.438	.375	6.250	1.375	2.375	6.188
	1.375	1"-14 x 1.625	1 3/8"-12 x 1.625	1 1/4"-12 x 1.625	1 1/4"-12 x 2.500	1.999	.625	1.125																1.625	2.625	6.438
	1.750	1 1/4"-12 x 2.000	1 3/4"-12 x 2.000	1 1/2"-12 x 2.000	1 1/2"-12 x 3.000	2.374	.750	1.500																1.875	2.875	6.688
	2.000	1 1/2"-12 x 2.250	2"-12 x 2.250	1 3/4"-12 x 2.250	1 3/4"-12 x 3.500	2.624	.875	1.688																2.000	3.000	6.813
	2.500	1 7/8"-12 x 3.000	2 1/2"-12 x 3.000	2 1/4"-12 x 3.000	2 1/4"-12 x 4.500	3.124	1.000	2.062																2.250	3.250	7.063
5.000	1.000	3/4"-16 x 1.125	1"-14 x 1.125	7/8"-14 x 1.125	7/8"-14 x 1.875	1.499	.500	.875	5.500	1/2	.625	.562	1.750	1.250	.594	.750	4.500	5.250	3.000	4.101	6.625	.500	7.625	1.375	2.375	6.594
	1.375	1"-14 x 1.625	1 3/8"-12 x 1.625	1 1/4"-12 x 1.625	1 1/4"-12 x 2.500	1.999	.625	1.125																1.625	2.625	6.844
	1.750	1 1/4"-12 x 2.000	1 3/4"-12 x 2.000	1 1/2"-12 x 2.000	1 1/2"-12 x 3.000	2.374	.750	1.500																1.875	2.875	7.094
	2.000	1 1/2"-12 x 2.250	2"-12 x 2.250	1 3/4"-12 x 2.250	1 3/4"-12 x 3.500	2.624	.875	1.688																2.000	3.000	7.219
	2.500	1 7/8"-12 x 3.000	2 1/2"-12 x 3.000	2 1/4"-12 x 3.000	2 1/4"-12 x 4.500	3.124	1.000	2.062																2.250	3.250	7.469
	3.000	2 1/4"-12 x 3.500	3"-12 x 3.500	2 3/4"-12 x 3.500	2 3/4"-12 x 5.500	3.749	1.000	2.625																2.250	3.250	7.469
	3.500	2 1/2"-12 x 3.500	3 1/2"-12 x 3.500	3 1/4"-12 x 3.500	3 1/4"-12 x 6.500	4.249	1.000	3.000																2.250	3.250	7.469
6.000	1.375	1"-14 x 1.625	1 3/8"-12 x 1.625	1 1/4"-12 x 1.625	1 1/4"-12 x 2.500	1.999	.625	1.125	6.500	3/4	.750	.562	2.000	1.500	.594	.750	5.000	6.250	3.250	4.879	7.625	.500	8.625	1.625	2.750	7.344
	1.750	1 1/4"-12 x 2.000	1 3/4"-12 x 2.000	1 1/2"-12 x 2.000	1 1/2"-12 x 3.000	2.374	.750	1.500																1.875	3.000	7.594
	2.000	1 1/2"-12 x 2.250	2"-12 x 2.250	1 3/4"-12 x 2.250	1 3/4"-12 x 3.500	2.624	.875	1.688																2.000	3.125	7.719
	2.500	1 7/8"-12 x 3.000	2 1/2"-12 x 3.000	2 1/4"-12 x 3.000	2 1/4"-12 x 4.500	3.124	1.000	2.062																2.250	3.375	7.969
	3.000	2 1/4"-12 x 3.500	3"-12 x 3.500	2 3/4"-12 x 3.500	2 3/4"-12 x 5.500	3.749	1.000	2.625																2.250	3.375	7.969
	3.500	2 1/2"-12 x 3.500	3 1/2"-12 x 3.500	3 1/4"-12 x 3.500	3 1/4"-12 x 6.500	4.249	1.000	3.000																2.250	3.375	7.969
	4.000	3"-12 x 4.000	4"-12 x 4.000	3 3/4"-12 x 4.000	3 3/4"-12 x 7.500	4.749	1.000	3.375																2.250	3.375	7.969
BORE	MM	KM & KF	KD	KI	KA	B	C	D	E	EE	F	FB	G	J	K	KN	LB	OD	P	R	TF	TR	UF	WB	Y	ZB

FILE: 1.17_MH17S2.dwg REV: 02/09/2010

27650 Groesbeck Hwy • Roseville, MI 48066-2759 • Phone 586.775.7211 • Fax 586.775.4545 • Toll Free 800.526.7968 • e-mail: sales@peninsularcylinders.com • www.peninsularcylinders.com

CAP SQUARE FLANGE

Heavy Duty Steel Air Cylinder

Peninsular Mounting Style: **MH 18**

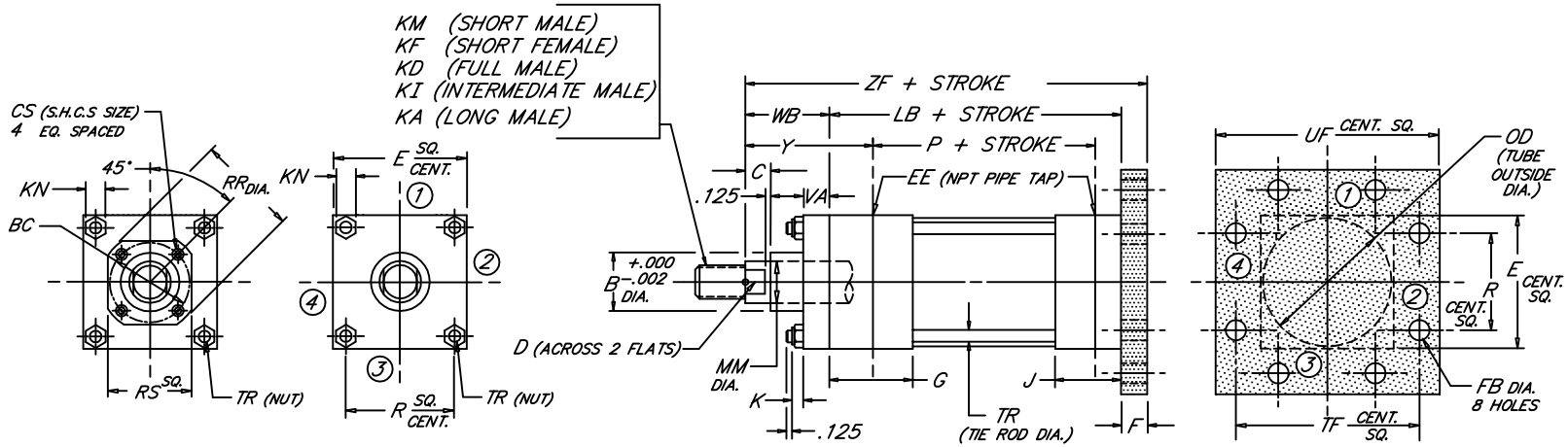

BORE	ROD MM	ROD THREAD X LENGTH KM & KF	KD	KI	KA	B	BC	C	CS	D	E	NPT EE	F	FB	G	J	K	KN	LB	OD	P	R	RR	RS	TF	TR	UF	VA	WB	Y	ZF
1.500	.625	7/16"-20 x .750	5/8"-18 x .750	1/2"-20 x .750	1/2"-20 x 1.125	1.124	---	.375	---	.500	2.000	3/8	.375	.312	1.500	1.000	.312	.438	3.625	1.750	2.335	1.428	---	---	2.750	.250	3.375	.375	1.000	1.875	5.000
	1.000	3/4"-16 x 1.125	1"-14 x 1.125	7/8"-14 x 1.125	7/8"-14 x 1.875	1.499		.500		.875																			1.375	2.250	5.375
2.000	.625	7/16"-20 x .750	5/8"-18 x .750	1/2"-20 x .750	1/2"-20 x 1.125	1.124	---	.375	---	.500	2.500	3/8	.375	.375	1.500	1.000	.344	.500	3.625	2.250	2.335	1.838	---	---	3.375	.312	4.125	.375	1.000	1.875	5.000
	1.000	3/4"-16 x 1.125	1"-14 x 1.125	7/8"-14 x 1.125	7/8"-14 x 1.875	1.499		.500		.875																			1.375	2.250	5.375
	1.375	1"-14 x 1.625	1 3/8"-12 x 1.625	1 1/4"-12 x 1.625	1 1/4"-12 x 2.500	1.999		.625		1.125																			1.625	2.500	5.625
2.500	.625	7/16"-20 x .750	5/8"-18 x .750	1/2"-20 x .750	1/2"-20 x 1.125	1.124	---	.375	---	.500	3.000	3/8	.375	.375	1.500	1.000	.344	.500	3.750	2.750	2.460	2.192	---	---	3.875	.312	4.625	.375	1.000	1.875	5.125
	1.000	3/4"-16 x 1.125	1"-14 x 1.125	7/8"-14 x 1.125	7/8"-14 x 1.875	1.499		.500		.875																			1.375	2.250	5.500
	1.375	1"-14 x 1.625	1 3/8"-12 x 1.625	1 1/4"-12 x 1.625	1 1/4"-12 x 2.500	1.999		.625		1.125																			1.625	2.500	5.750
	1.750	1 1/4"-12 x 2.000	1 3/4"-12 x 2.000	1 1/2"-12 x 2.000	1 1/2"-12 x 3.000	2.374		.750		1.500																			1.875	2.750	6.000
3.250	1.000	3/4"-16 x 1.125	1"-14 x 1.125	7/8"-14 x 1.125	7/8"-14 x 1.875	1.499	---	.500	---	.875	3.750	1/2	.625	.438	1.750	1.250	.438	.562	4.250	3.500	2.750	2.758	---	---	4.688	.375	5.500	.625	1.375	2.375	6.250
	1.375	1"-14 x 1.625	1 3/8"-12 x 1.625	1 1/4"-12 x 1.625	1 1/4"-12 x 2.500	1.999		.625		1.125																			1.625	2.625	6.500
	1.750	1 1/4"-12 x 2.000	1 3/4"-12 x 2.000	1 1/2"-12 x 2.000	1 1/2"-12 x 3.000	2.374		.750		1.500																			1.875	2.875	6.750
	2.000	1 1/2"-12 x 2.250	2"-12 x 2.250	1 3/4"-12 x 2.250	1 3/4"-12 x 3.500	2.624		.875		1.688																			2.000	3.000	6.875
4.000	1.000	3/4"-16 x 1.125	1"-14 x 1.125	7/8"-14 x 1.125	7/8"-14 x 1.875	1.499	2.562	.500	.250	.875	4.500	1/2	.625	.438	1.750	1.250	.438	.562	4.250	4.250	2.750	3.323	2.969	2.500	5.438	.375	6.250	.625	1.375	2.375	6.250
	1.375	1"-14 x 1.625	1 3/8"-12 x 1.625	1 1/4"-12 x 1.625	1 1/4"-12 x 2.500	1.999	2.562	.625	.250	1.125													2.969	2.500					1.625	2.625	6.500
	1.750	1 1/4"-12 x 2.000	1 3/4"-12 x 2.000	1 1/2"-12 x 2.000	1 1/2"-12 x 3.000	2.374	3.267	.750	.312	1.500													3.734	3.000					1.875	2.875	6.750
	2.000	1 1/2"-12 x 2.250	2"-12 x 2.250	1 3/4"-12 x 2.250	1 3/4"-12 x 3.500	2.624	---	.875	---	1.688													---	---					2.000	3.000	6.875
	2.500	1 7/8"-12 x 3.000	2 1/2"-12 x 3.000	2 1/4"-12 x 3.000	2 1/4"-12 x 4.500	3.124	---	1.000	---	2.062													---	---					2.250	3.250	7.125
5.000	1.000	3/4"-16 x 1.125	1"-14 x 1.125	7/8"-14 x 1.125	7/8"-14 x 1.875	1.499	2.562	.500	.250	.875	5.500	1/2	.625	.562	1.750	1.250	.594	.750	4.500	5.250	3.000	4.101	2.969	2.500	6.625	.500	7.625	.625	1.375	2.375	6.500
	1.375	1"-14 x 1.625	1 3/8"-12 x 1.625	1 1/4"-12 x 1.625	1 1/4"-12 x 2.500	1.999	2.562	.625	.250	1.125													2.969	2.500					1.625	2.625	6.750
	1.750	1 1/4"-12 x 2.000	1 3/4"-12 x 2.000	1 1/2"-12 x 2.000	1 1/2"-12 x 3.000	2.374	3.267	.750	.312	1.500													3.734	3.000					1.875	2.875	7.000
	2.000	1 1/2"-12 x 2.250	2"-12 x 2.250	1 3/4"-12 x 2.250	1 3/4"-12 x 3.500	2.624	3.812	.875	.312	1.688													4.312	3.750					2.000	3.000	7.125
	2.500	1 7/8"-12 x 3.000	2 1/2"-12 x 3.000	2 1/4"-12 x 3.000	2 1/4"-12 x 4.500	3.124	3.812	1.000	.312	2.062													4.312	3.750					2.250	3.250	7.375
	3.000	2 1/4"-12 x 3.500	3"-12 x 3.500	2 3/4"-12 x 3.500	2 3/4"-12 x 5.500	3.749	---	1.000	---	2.625													---	---					2.250	3.250	7.375
	3.500	2 1/2"-12 x 3.500	3 1/2"-12 x 3.500	3 1/4"-12 x 3.500	3 1/4"-12 x 6.500	4.249	---	1.000	---	3.000													---	---					2.250	3.250	7.375
6.000	1.375	1"-14 x 1.625	1 3/8"-12 x 1.625	1 1/4"-12 x 1.625	1 1/4"-12 x 2.500	1.999	3.267	.625	.312	1.125	6.500	3/4	.750	.562	2.000	1.500	.594	.750	5.000	6.250	3.250	4.879	3.734	3.000	7.625	.500	8.625	.625	1.625	2.750	7.375
	1.750	1 1/4"-12 x 2.000	1 3/4"-12 x 2.000	1 1/2"-12 x 2.000	1 1/2"-12 x 3.000	2.374	3.267	.750	.312	1.500													3.734	3.000				.625	1.875	3.000	7.625
	2.000	1 1/2"-12 x 2.250	2"-12 x 2.250	1 3/4"-12 x 2.250	1 3/4"-12 x 3.500	2.624	3.812	.875	.312	1.688													4.312	3.750				.625	2.000	3.125	7.750
	2.500	1 7/8"-12 x 3.000	2 1/2"-12 x 3.000	2 1/4"-12 x 3.000	2 1/4"-12 x 4.500	3.124	3.812	1.000	.312	2.062													4.312	3.750				.625	2.250	3.375	8.000
	3.000	2 1/4"-12 x 3.500	3"-12 x 3.500	2 3/4"-12 x 3.500	2 3/4"-12 x 5.500	3.749	4.700	1.000	.375	2.625													5.562	4.500				.625	2.250	3.375	8.000
	3.500	2 1/2"-12 x 3.500	3 1/2"-12 x 3.500	3 1/4"-12 x 3.500	3 1/4"-12 x 6.500	4.249	5.200	1.000	.375	3.000													6.062	5.000				.625	2.250	3.375	8.000
	4.000	3"-12 x 4.000	4"-12 x 4.000	3 3/4"-12 x 4.000	3 3/4"-12 x 7.500	4.749	---	1.000	---	3.375													---	---				.750	2.250	3.375	8.000
BORE	MM	KM & KF	KD	KI	KA	B	BC	C	CS	D	E	EE	F	FB	G	J	K	KN	LB	OD	P	R	RR	RS	TF	TR	UF	VA	WB	Y	ZF

FILE: 1.18_MH18S2.dwg REV: 02/09/2010

27650 Groesbeck Hwy • Roseville, MI 48066-2759 • Phone 586.775.7211 • Fax 586.775.4545 • Toll Free 800.526.7968 • e-mail: sales@peninsularcylinders.com • www.peninsularcylinders.com

HEAD SQUARE BLOCK

Heavy Duty Steel Air Cylinder

Peninsular Mounting Style: **MH 19**

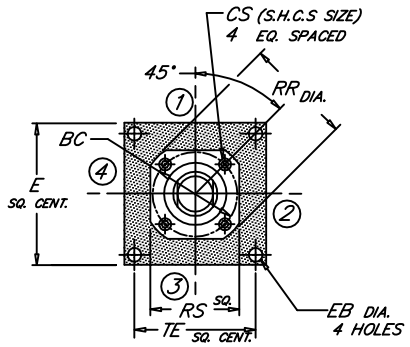

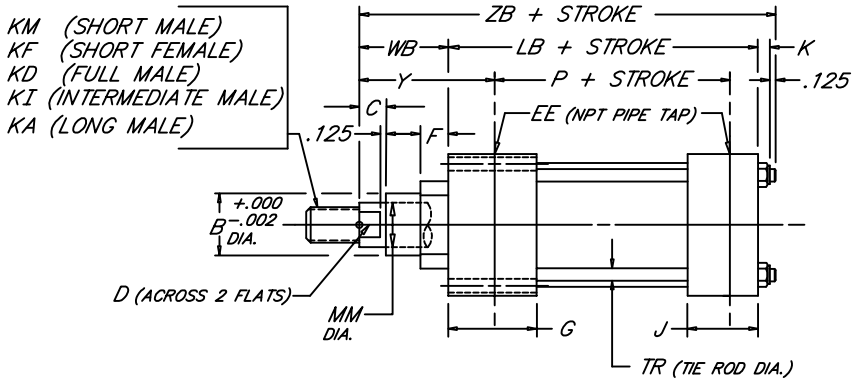

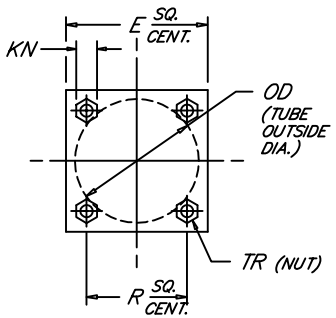

BORE	ROD MM	ROD THREAD X LENGTH KM & KF	KD	KI	KA	B	BC	C	CS	D	E	EB	NPT EE	F	G	J	K	KN	LB	OD	P	R	RR	RS	TE	TR	WB	Y	ZB
8.000	1.375	1"-14 x 1.625	1 3/8"-12 x 1.625	1 1/4"-12 x 1.625	1 1/4"-12 x 2.500	1.999	3.267	.625	.312	1.125	8.500	.688	3/4	.625	2.000	1.500	.750	.938	5.125	8.450	3.375	6.435	3.734	3.000	7.570	.625	1.625	2.750	7.625
	1.750	1 1/4"-12 x 2.000	1 3/4"-12 x 2.000	1 1/2"-12 x 2.000	1 1/2"-12 x 3.000	2.374	3.267	.750	.312	1.500													3.734	3.000			1.875	3.000	7.875
	2.000	1 1/2"-12 x 2.250	2"-12 x 2.250	1 3/4"-12 x 2.250	1 3/4"-12 x 3.500	2.624	3.812	.875	.312	1.688													4.312	3.750			2.000	3.125	8.000
	2.500	1 7/8"-12 x 3.000	2 1/2"-12 x 3.000	2 1/4"-12 x 3.000	2 1/4"-12 x 4.500	3.124	3.812	1.000	.312	2.062													4.312	3.750			2.250	3.375	8.250
	3.000	2 1/4"-12 x 3.500	3"-12 x 3.500	2 3/4"-12 x 3.500	2 3/4"-12 x 5.500	3.749	4.700	1.000	.375	2.625													5.562	4.500			2.250	3.375	8.250
	3.500	2 1/2"-12 x 3.500	3 1/2"-12 x 3.500	3 1/4"-12 x 3.500	3 1/4"-12 x 6.500	4.249	5.200	1.000	.375	3.000													6.062	5.000			2.250	3.375	8.250
	4.000	3"-12 x 4.000	4"-12 x 4.000	3 3/4"-12 x 4.000	3 3/4"-12 x 7.500	4.749	5.700	1.000	.375	3.375													6.562	5.500			2.250	3.375	8.250
	4.500	3 1/4"-12 x 4.500	4 1/2"-12 x 4.500	4 1/4"-12 x 4.500	4 1/4"-12 x 8.250	5.249	6.200	1.000	.375	3.875													7.062	6.000			2.250	3.375	8.250
	5.000	3 1/2"-12 x 5.000	5"-12 x 5.000	4 3/4"-12 x 5.000	4 3/4"-12 x 9.000	5.749	6.700	1.000	.375	4.250													7.562	6.500			2.250	3.375	8.250
	5.500	4"-12 x 5.500	5 1/2"-12 x 5.500	5 1/4"-12 x 5.500	5 1/4"-12 x 10.000	6.249	7.125	1.000	.375	4.625													7.938	7.000			2.250	3.375	8.250
10.000	1.750	1 1/4"-12 x 2.000	1 3/4"-12 x 2.000	1 1/2"-12 x 2.000	1 1/2"-12 x 3.000	2.374	3.812	.750	.312	1.500	10.625	.812	1	.625	2.250	2.000	.875	1.062	6.375	10.450	4.250	7.920	4.312	3.750	9.400	.750	1.875	3.062	9.250
	2.000	1 1/2"-12 x 2.250	2"-12 x 2.250	1 3/4"-12 x 2.250	1 3/4"-12 x 3.500	2.624	3.812	.875	.312	1.688													4.312	3.750			2.000	3.187	9.375
	2.500	1 7/8"-12 x 3.000	2 1/2"-12 x 3.000	2 1/4"-12 x 3.000	2 1/4"-12 x 4.500	3.124	3.812	1.000	.312	2.062													4.312	3.750			2.250	3.437	9.625
	3.000	2 1/4"-12 x 3.500	3"-12 x 3.500	2 3/4"-12 x 3.500	2 3/4"-12 x 5.500	3.749	4.700	1.000	.375	2.625													5.562	4.500			2.250	3.437	9.625
	3.500	2 1/2"-12 x 3.500	3 1/2"-12 x 3.500	3 1/4"-12 x 3.500	3 1/4"-12 x 6.500	4.249	5.200	1.000	.375	3.000													6.062	5.000			2.250	3.437	9.625
	4.000	3"-12 x 4.000	4"-12 x 4.000	3 3/4"-12 x 4.000	3 3/4"-12 x 7.500	4.749	5.700	1.000	.375	3.375													6.562	5.500			2.250	3.437	9.625
	4.500	3 1/4"-12 x 4.500	4 1/2"-12 x 4.500	4 1/4"-12 x 4.500	4 1/4"-12 x 8.250	5.249	6.200	1.000	.375	3.875													7.062	6.000			2.250	3.437	9.625
	5.000	3 1/2"-12 x 5.000	5"-12 x 5.000	4 3/4"-12 x 5.000	4 3/4"-12 x 9.000	5.749	6.700	1.000	.375	4.250													7.562	6.500			2.250	3.437	9.625
	5.500	4"-12 x 5.500	5 1/2"-12 x 5.500	5 1/4"-12 x 5.500	5 1/4"-12 x 10.000	6.249	7.125	1.000	.375	4.625													7.938	7.000			2.250	3.437	9.625
12.000	2.000	1 1/2"-12 x 2.250	2"-12 x 2.250	1 3/4"-12 x 2.250	1 3/4"-12 x 3.500	2.624	3.812	.875	.312	1.688	12.750	.812	1	.625	2.250	2.000	.875	1.062	6.875	12.450	4.750	9.405	4.312	3.750	11.100	.750	2.000	3.187	9.875
	2.500	1 7/8"-12 x 3.000	2 1/2"-12 x 3.000	2 1/4"-12 x 3.000	2 1/4"-12 x 4.500	3.124	3.812	1.000	.312	2.062													4.312	3.750			2.250	3.437	10.125
	3.000	2 1/4"-12 x 3.500	3"-12 x 3.500	2 3/4"-12 x 3.500	2 3/4"-12 x 5.500	3.749	4.700	1.000	.375	2.625													5.562	4.500			2.250	3.437	10.125
	3.500	2 1/2"-12 x 3.500	3 1/2"-12 x 3.500	3 1/4"-12 x 3.500	3 1/4"-12 x 6.500	4.249	5.200	1.000	.375	3.000													6.062	5.000			2.250	3.437	10.125
	4.000	3"-12 x 4.000	4"-12 x 4.000	3 3/4"-12 x 4.000	3 3/4"-12 x 7.500	4.749	5.700	1.000	.375	3.375													6.562	5.500			2.250	3.437	10.125
	4.500	3 1/4"-12 x 4.500	4 1/2"-12 x 4.500	4 1/4"-12 x 4.500	4 1/4"-12 x 8.250	5.249	6.200	1.000	.375	3.875													7.062	6.000			2.250	3.437	10.125
	5.000	3 1/2"-12 x 5.000	5"-12 x 5.000	4 3/4"-12 x 5.000	4 3/4"-12 x 9.000	5.749	6.700	1.000	.375	4.250													7.562	6.500			2.250	3.437	10.125
	5.500	4"-12 x 5.500	5 1/2"-12 x 5.500	5 1/4"-12 x 5.500	5 1/4"-12 x 10.000	6.249	7.125	1.000	.375	4.625													7.938	7.000			2.250	3.437	10.125
14.000	2.500	1 7/8"-12 x 3.000	2 1/2"-12 x 3.000	2 1/4"-12 x 3.000	2 1/4"-12 x 4.500	3.124	3.812		.312	2.062	14.750	.938	1 1/4	.625	2.750	2.250	1.000	1.250	8.125	14.450	5.625	10.889	4.312	3.750	12.875	.875	2.250	3.688	11.500
	3.000	2 1/4"-12 x 3.500	3"-12 x 3.500	2 3/4"-12 x 3.500	2 3/4"-12 x 5.500	3.749	4.700		.375	2.625													5.562	4.500					
	3.500	2 1/2"-12 x 3.500	3 1/2"-12 x 3.500	3 1/4"-12 x 3.500	3 1/4"-12 x 6.500	4.249	5.200		.375	3.000													6.062	5.000					
	4.000	3"-12 x 4.000	4"-12 x 4.000	3 3/4"-12 x 4.000	3 3/4"-12 x 7.500	4.749	5.700		.375	3.375													6.562	5.500					
	4.500	3 1/4"-12 x 4.500	4 1/2"-12 x 4.500	4 1/4"-12 x 4.500	4 1/4"-12 x 8.250	5.249	6.200		.375	3.875													7.062	6.000					
	5.000	3 1/2"-12 x 5.000	5"-12 x 5.000	4 3/4"-12 x 5.000	4 3/4"-12 x 9.000	5.749	6.700		.375	4.250													7.562	6.500					
	5.500	4"-12 x 5.500	5 1/2"-12 x 5.500	5 1/4"-12 x 5.500	5 1/4"-12 x 10.000	6.249	7.125		.375	4.625													7.938	7.000					
BORE	MM	KM & KF	KD	KI	KA	B	BC	C	CS	D	E	EB	EE	F	G	J	K	KN	LB	OD	P	R	RR	RS	TE	TR	WB	Y	ZB

FILE: 1.19_MH19L2.dwg REV: 02/09/2010

27650 Groesbeck Hwy • Roseville, MI 48066-2759 • Phone 586.775.7211 • Fax 586.775.4545 • Toll Free 800.526.7968 • e-mail: sales@peninsularcylinders.com • www.peninsularcylinders.com

CAP SQUARE BLOCK

Heavy Duty Steel Air Cylinder

Peninsular Mounting Style: **MH 20**

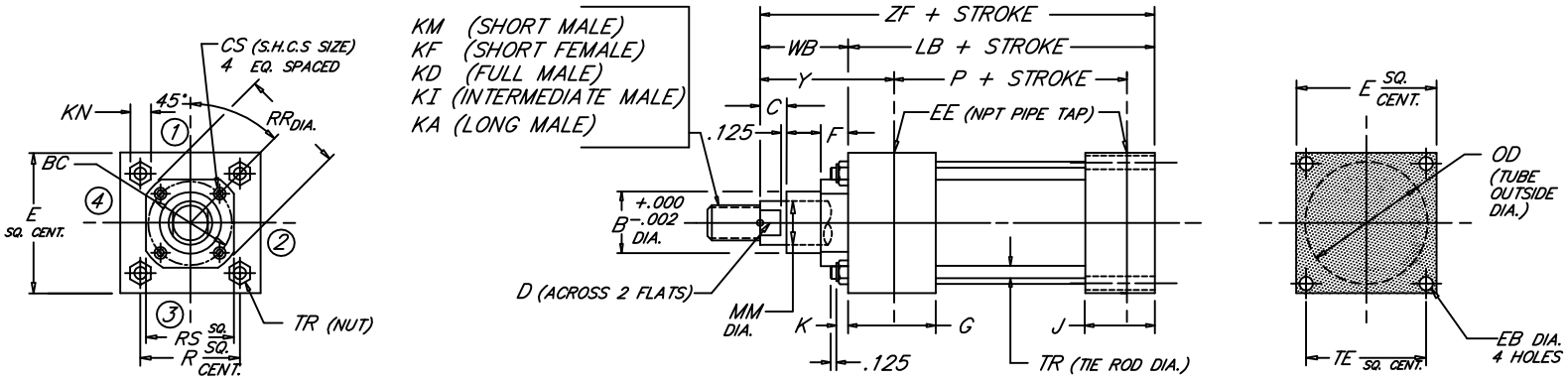

BORE	MM	ROD: KM & KF	ROD THREAD X LENGTH: KD	KI	KA	B	BC	C	CS	D	E	EB	NPT: EE	F	G	J	K	KN	LB	OD	P	R	RR	RS	TE	TR	WB	Y	ZF
8.000	1.375	1"-14 x 1.625	1 3/8"-12 x 1.625	1 1/4"-12 x 1.625	1 1/4"-12 x 2.500	1.999	3.267	.625	.312	1.125	8.500	.688	3/4	.625	2.000	1.500	.750	.938	5.125	8.450	3.375	6.435	3.734	3.000	7.570	.625	1.625	2.750	6.750
	1.750	1 1/4"-12 x 2.000	1 3/4"-12 x 2.000	1 1/2"-12 x 2.000	1 1/2"-12 x 3.000	2.374	3.267	.750	.312	1.500													3.734	3.000			1.875	3.000	7.000
	2.000	1 1/2"-12 x 2.250	2"-12 x 2.250	1 3/4"-12 x 2.250	1 3/4"-12 x 3.500	2.624	3.812	.875	.312	1.688													4.312	3.750			2.000	3.125	7.125
	2.500	1 7/8"-12 x 3.000	2 1/2"-12 x 3.000	2 1/4"-12 x 3.000	2 1/4"-12 x 4.500	3.124	3.812	1.000	.312	2.062													4.312	3.750			2.250	3.375	7.375
	3.000	2 1/4"-12 x 3.500	3"-12 x 3.500	2 3/4"-12 x 3.500	2 3/4"-12 x 5.500	3.749	4.700	1.000	.375	2.625													5.562	4.500			2.250	3.375	7.375
	3.500	2 1/2"-12 x 3.500	3 1/2"-12 x 3.500	3 1/4"-12 x 3.500	3 1/4"-12 x 6.500	4.249	5.200	1.000	.375	3.000													6.062	5.000			2.250	3.375	7.375
	4.000	3"-12 x 4.000	4"-12 x 4.000	3 3/4"-12 x 4.000	3 3/4"-12 x 7.500	4.749	5.700	1.000	.375	3.375													6.562	5.500			2.250	3.375	7.375
	4.500	3 1/4"-12 x 4.500	4 1/2"-12 x 4.500	4 1/4"-12 x 4.500	4 1/4"-12 x 8.250	5.249	6.200	1.000	.375	3.875													7.062	6.000			2.250	3.375	7.375
	5.000	3 1/2"-12 x 5.000	5"-12 x 5.000	4 3/4"-12 x 5.000	4 3/4"-12 x 9.000	5.749	6.700	1.000	.375	4.250													7.562	6.500			2.250	3.375	7.375
	5.500	4"-12 x 5.500	5 1/2"-12 x 5.500	5 1/4"-12 x 5.500	5 1/4"-12 x 10.000	6.249	7.125	1.000	.375	4.625													7.938	7.000			2.250	3.375	7.375
10.000	1.750	1 1/4"-12 x 2.000	1 3/4"-12 x 2.000	1 1/2"-12 x 2.000	1 1/2"-12 x 3.000	2.374	3.812	.750	.312	1.500	10.625	.812	1	.625	2.250	2.000	.875	1.062	6.375	10.450	4.250	7.920	4.312	3.750	9.400	.750	1.875	3.062	8.250
	2.000	1 1/2"-12 x 2.250	2"-12 x 2.250	1 3/4"-12 x 2.250	1 3/4"-12 x 3.500	2.624	3.812	.875	.312	1.688													4.312	3.750			2.000	3.187	8.375
	2.500	1 7/8"-12 x 3.000	2 1/2"-12 x 3.000	2 1/4"-12 x 3.000	2 1/4"-12 x 4.500	3.124	3.812	1.000	.312	2.062													4.312	3.750			2.250	3.437	8.625
	3.000	2 1/4"-12 x 3.500	3"-12 x 3.500	2 3/4"-12 x 3.500	2 3/4"-12 x 5.500	3.749	4.700	1.000	.375	2.625													5.562	4.500			2.250	3.437	8.625
	3.500	2 1/2"-12 x 3.500	3 1/2"-12 x 3.500	3 1/4"-12 x 3.500	3 1/4"-12 x 6.500	4.249	5.200	1.000	.375	3.000													6.062	5.000			2.250	3.437	8.625
	4.000	3"-12 x 4.000	4"-12 x 4.000	3 3/4"-12 x 4.000	3 3/4"-12 x 7.500	4.749	5.700	1.000	.375	3.375													6.562	5.500			2.250	3.437	8.625
	4.500	3 1/4"-12 x 4.500	4 1/2"-12 x 4.500	4 1/4"-12 x 4.500	4 1/4"-12 x 8.250	5.249	6.200	1.000	.375	3.875													7.062	6.000			2.250	3.437	8.625
	5.000	3 1/2"-12 x 5.000	5"-12 x 5.000	4 3/4"-12 x 5.000	4 3/4"-12 x 9.000	5.749	6.700	1.000	.375	4.250													7.562	6.500			2.250	3.437	8.625
	5.500	4"-12 x 5.500	5 1/2"-12 x 5.500	5 1/4"-12 x 5.500	5 1/4"-12 x 10.000	6.249	7.125	1.000	.375	4.625													7.938	7.000			2.250	3.437	8.625
12.000	2.000	1 1/2"-12 x 2.250	2"-12 x 2.250	1 3/4"-12 x 2.250	1 3/4"-12 x 3.500	2.624	3.812	.875	.312	1.688	12.750	.812	1	.625	2.250	2.000	.875	1.062	6.875	12.450	4.750	9.405	4.312	3.750	11.100	.750	2.000	3.187	8.875
	2.500	1 7/8"-12 x 3.000	2 1/2"-12 x 3.000	2 1/4"-12 x 3.000	2 1/4"-12 x 4.500	3.124	3.812	1.000	.312	2.062													4.312	3.750			2.250	3.437	9.125
	3.000	2 1/4"-12 x 3.500	3"-12 x 3.500	2 3/4"-12 x 3.500	2 3/4"-12 x 5.500	3.749	4.700	1.000	.375	2.625													5.562	4.500			2.250	3.437	9.125
	3.500	2 1/2"-12 x 3.500	3 1/2"-12 x 3.500	3 1/4"-12 x 3.500	3 1/4"-12 x 6.500	4.249	5.200	1.000	.375	3.000													6.062	5.000			2.250	3.437	9.125
	4.000	3"-12 x 4.000	4"-12 x 4.000	3 3/4"-12 x 4.000	3 3/4"-12 x 7.500	4.749	5.700	1.000	.375	3.375													6.562	5.500			2.250	3.437	9.125
	4.500	3 1/4"-12 x 4.500	4 1/2"-12 x 4.500	4 1/4"-12 x 4.500	4 1/4"-12 x 8.250	5.249	6.200	1.000	.375	3.875													7.062	6.000			2.250	3.437	9.125
	5.000	3 1/2"-12 x 5.000	5"-12 x 5.000	4 3/4"-12 x 5.000	4 3/4"-12 x 9.000	5.749	6.700	1.000	.375	4.250													7.562	6.500			2.250	3.437	9.125
	5.500	4"-12 x 5.500	5 1/2"-12 x 5.500	5 1/4"-12 x 5.500	5 1/4"-12 x 10.000	6.249	7.125	1.000	.375	4.625													7.938	7.000			2.250	3.437	9.125
14.000	2.500	1 7/8"-12 x 3.000	2 1/2"-12 x 3.000	2 1/4"-12 x 3.000	2 1/4"-12 x 4.500	3.124	3.812		.312	2.062	14.750	.938	1 1/4	.625	2.750	2.250	1.000	1.250	8.125	14.450	5.625	10.889	4.312	3.750	12.875	.875	2.250	3.688	10.375
	3.000	2 1/4"-12 x 3.500	3"-12 x 3.500	2 3/4"-12 x 3.500	2 3/4"-12 x 5.500	3.749	4.700		.375	2.625													5.562	4.500					
	3.500	2 1/2"-12 x 3.500	3 1/2"-12 x 3.500	3 1/4"-12 x 3.500	3 1/4"-12 x 6.500	4.249	5.200		.375	3.000													6.062	5.000					
	4.000	3"-12 x 4.000	4"-12 x 4.000	3 3/4"-12 x 4.000	3 3/4"-12 x 7.500	4.749	5.700	1.000	.375	3.375													6.562	5.500					
	4.500	3 1/4"-12 x 4.500	4 1/2"-12 x 4.500	4 1/4"-12 x 4.500	4 1/4"-12 x 8.250	5.249	6.200		.375	3.875													7.062	6.000					
	5.000	3 1/2"-12 x 5.000	5"-12 x 5.000	4 3/4"-12 x 5.000	4 3/4"-12 x 9.000	5.749	6.700		.375	4.250													7.562	6.500					
	5.500	4"-12 x 5.500	5 1/2"-12 x 5.500	5 1/4"-12 x 5.500	5 1/4"-12 x 10.000	6.249	7.125		.375	4.625													7.938	7.000					
BORE	MM	KM & KF	KD	KI	KA	B	BC	C	CS	D	E	EB	EE	F	G	J	K	KN	LB	OD	P	R	RR	RS	TE	TR	WB	Y	ZF

FILE: 1.20_MH20L2.dwg REV: 02/09/2010

27650 Groesbeck Hwy • Roseville, MI 48066-2759 • Phone 586.775.7211 • Fax 586.775.4545 • Toll Free 800.526.7968 • e-mail: sales@peninsularcylinders.com • www.peninsularcylinders.com

CAP DETACHABLE EYE

Heavy Duty Steel Air Cylinder

Peninsular Mounting Style: **MH 21**

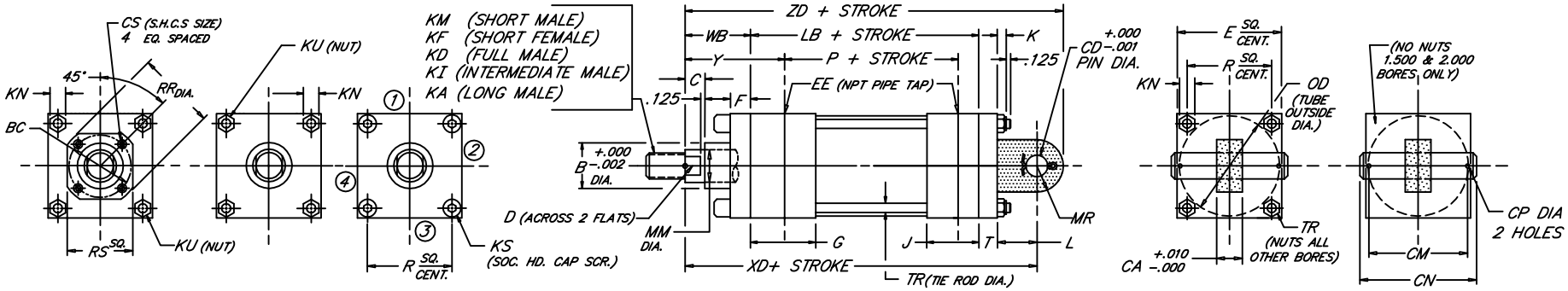

BORE	ROD MM	ROD THREAD X LENGTH KM & KF	KD	KI	KA	B	BC	C	CA	CD	CM	CN	CP	CS	D	E	NPT EE	F	G	J	K	KN	KS	KU	L	LB	MR	OD	P	R	RR	RS	T	TR	WB	XD	Y	ZD
1.500	.625	7/16"-20 x .750	5/8"-18 x .750	1/2"-20 x .750	1/2"-20 x 1.125	1.124	---	.375	.735	.500	1.938	2.281	.106	---	.500	2.000	3/8	.375	1.500	1.000	.312	.438	---	.250	.750	3.625	.625	1.750	2.335	1.428	---	---	.375	.250	1.000	5.750	1.875	6.375
	1.000	3/4"-16 x 1.125	1"-14 x 1.125	7/8"-14 x 1.125	7/8"-14 x 1.875	1.499		.500							.875																				1.375	6.125	2.250	6.750
2.000	.625	7/16"-20 x .750	5/8"-18 x .750	1/2"-20 x .750	1/2"-20 x 1.125	1.124	---	.375	.735	.500	1.938	2.281	.106	---	.500	2.500	3/8	.375	1.500	1.000	.344	.500	---	.312	.750	3.625	.625	2.250	2.335	1.838	---	---	.375	.312	1.000	5.750	1.875	6.375
	1.000	3/4"-16 x 1.125	1"-14 x 1.125	7/8"-14 x 1.125	7/8"-14 x 1.875	1.499		.500							.875																				1.375	6.125	2.250	6.750
	1.375	1"-14 x 1.625	1 3/8"-12 x 1.625	1 1/4"-12 x 1.625	1 1/4"-12 x 2.500	1.999		.625							1.125																				1.625	6.375	2.500	7.000
2.500	.625	7/16"-20 x .750	5/8"-18 x .750	1/2"-20 x .750	1/2"-20 x 1.125	1.124	---	.375	.735	.500	1.938	2.281	.106	---	.500	3.000	3/8	.375	1.500	1.000	.344	.500	.312	---	.750	3.750	.625	2.750	2.460	2.192	---	---	.375	.312	1.000	5.875	1.875	6.500
	1.000	3/4"-16 x 1.125	1"-14 x 1.125	7/8"-14 x 1.125	7/8"-14 x 1.875	1.499		.500							.875																				1.375	6.250	2.250	6.875
	1.375	1"-14 x 1.625	1 3/8"-12 x 1.625	1 1/4"-12 x 1.625	1 1/4"-12 x 2.500	1.999		.625							1.125																				1.625	6.500	2.500	7.125
	1.750	1 1/4"-12 x 2.000	1 3/4"-12 x 2.000	1 1/2"-12 x 2.000	1 1/2"-12 x 3.000	2.374		.750							1.500																				1.875	6.750	2.750	7.375
3.250	1.000	3/4"-16 x 1.125	1"-14 x 1.125	7/8"-14 x 1.125	7/8"-14 x 1.875	1.499	---	.500	1.235	.750	2.719	3.094	.140	---	.875	3.750	1/2	.625	1.750	1.250	.438	.562	.375	---	1.250	4.250	.875	3.500	2.750	2.758	---	---	.625	.375	1.375	7.500	2.375	8.375
	1.375	1"-14 x 1.625	1 3/8"-12 x 1.625	1 1/4"-12 x 1.625	1 1/4"-12 x 2.500	1.999		.625							1.125																				1.625	7.750	2.625	8.625
	1.750	1 1/4"-12 x 2.000	1 3/4"-12 x 2.000	1 1/2"-12 x 2.000	1 1/2"-12 x 3.000	2.374		.750							1.500																				1.875	8.000	2.875	8.875
	2.000	1 1/2"-12 x 2.250	2"-12 x 2.250	1 3/4"-12 x 2.250	1 3/4"-12 x 3.500	2.624		.875							1.688																				2.000	8.125	3.000	9.000
4.000	1.000	3/4"-16 x 1.125	1"-14 x 1.125	7/8"-14 x 1.125	7/8"-14 x 1.875	1.499	2.562	.500						.250	.875								---	.375							2.969	2.500			1.375	7.500	2.375	8.375
	1.375	1"-14 x 1.625	1 3/8"-12 x 1.625	1 1/4"-12 x 1.625	1 1/4"-12 x 2.500	1.999	2.562	.625						.250	1.125								---	.375							2.969	2.500			1.625	7.750	2.625	8.625
	1.750	1 1/4"-12 x 2.000	1 3/4"-12 x 2.000	1 1/2"-12 x 2.000	1 1/2"-12 x 3.000	2.374	3.267	.750	1.235	.750	2.719	3.094	.140	.312	1.500	4.500	1/2	.625	1.750	1.250	.438	.562	---	.375	1.250	4.250	.875	4.250	2.750	3.323	3.734	3.000	.625	.375	1.875	8.000	2.875	8.875
	2.000	1 1/2"-12 x 2.250	2"-12 x 2.250	1 3/4"-12 x 2.250	1 3/4"-12 x 3.500	2.624	---	.875						---	1.688								.375	---							---	---			2.000	8.125	3.000	9.000
	2.500	1 7/8"-12 x 3.000	2 1/2"-12 x 3.000	2 1/4"-12 x 3.000	2 1/4"-12 x 4.500	3.124	---	1.000						---	2.062								.375	---							---	---			2.250	8.375	3.250	9.250
5.000	1.000	3/4"-16 x 1.125	1"-14 x 1.125	7/8"-14 x 1.125	7/8"-14 x 1.875	1.499	2.562	.500						.250	.875								---	.500							2.969	2.500			1.375	7.750	2.375	8.625
	1.375	1"-14 x 1.625	1 3/8"-12 x 1.625	1 1/4"-12 x 1.625	1 1/4"-12 x 2.500	1.999	2.562	.625						.250	1.125								---	.500							2.969	2.500			1.625	8.000	2.625	8.875
	1.750	1 1/4"-12 x 2.000	1 3/4"-12 x 2.000	1 1/2"-12 x 2.000	1 1/2"-12 x 3.000	2.374	3.267	.750						.312	1.500								---	.500							3.734	3.000			1.875	8.250	2.875	9.125
	2.000	1 1/2"-12 x 2.250	2"-12 x 2.250	1 3/4"-12 x 2.250	1 3/4"-12 x 3.500	2.624	3.812	.875	1.235	.750	2.719	3.094	.140	.312	1.688	5.500	1/2	.625	1.750	1.250	.594	.750	---	.500	1.250	4.500	.875	5.250	3.000	4.101	4.312	3.750	.625	.500	2.000	8.375	3.000	9.250
	2.500	1 7/8"-12 x 3.000	2 1/2"-12 x 3.000	2 1/4"-12 x 3.000	2 1/4"-12 x 4.500	3.124	3.812	1.000						.312	2.062								---	.500							4.312	3.750			2.250	8.625	3.250	9.500
	3.000	2 1/4"-12 x 3.500	3"-12 x 3.500	2 3/4"-12 x 3.500	2 3/4"-12 x 5.500	3.749	---	1.000						---	2.625								.500	---							---	---			2.250	8.625	3.250	9.500
	3.500	2 1/2"-12 x 3.500	3 1/2"-12 x 3.500	3 1/4"-12 x 3.500	3 1/4"-12 x 6.500	4.249	---	1.000						---	3.000								.500	---							---	---			2.250	8.625	3.250	9.500
6.000	1.375	1"-14 x 1.625	1 3/8"-12 x 1.625	1 1/4"-12 x 1.625	1 1/4"-12 x 2.500	1.999	3.267	.625						.312	1.125			.625					---	.500							3.734	3.000			1.625	8.875	2.750	10.000
	1.750	1 1/4"-12 x 2.000	1 3/4"-12 x 2.000	1 1/2"-12 x 2.000	1 1/2"-12 x 3.000	2.374	3.267	.750						.312	1.500			.625					---	.500							3.734	3.000			1.875	9.125	3.000	10.250
	2.000	1 1/2"-12 x 2.250	2"-12 x 2.250	1 3/4"-12 x 2.250	1 3/4"-12 x 3.500	2.624	3.812	.875						.312	1.688			.625					---	.500							4.312	3.750			2.000	9.250	3.125	10.375
	2.500	1 7/8"-12 x 3.000	2 1/2"-12 x 3.000	2 1/4"-12 x 3.000	2 1/4"-12 x 4.500	3.124	3.812	1.000	1.485	1.000	3.219	3.594	.140	.312	2.062	6.500	3/4	.625	2.000	1.500	.594	.750	---	.500	1.500	5.000	1.125	6.250	3.250	4.879	4.312	3.750	.750	.500	2.250	9.500	3.375	10.625
	3.000	2 1/4"-12 x 3.500	3"-12 x 3.500	2 3/4"-12 x 3.500	2 3/4"-12 x 5.500	3.749	4.700	1.000						.375	2.625			.625					---	.500							5.562	4.500			2.250	9.500	3.375	10.625
	3.500	2 1/2"-12 x 3.500	3 1/2"-12 x 3.500	3 1/4"-12 x 3.500	3 1/4"-12 x 6.500	4.249	5.200	1.000						.375	3.000			.625					---	.500							6.062	5.000			2.250	9.500	3.375	10.625
	4.000	3"-12 x 4.000	4"-12 x 4.000	3 3/4"-12 x 4.000	3 3/4"-12 x 7.500	4.749	---	1.000						---	3.375			.750					.500	---							---	---			2.250	9.500	3.375	10.625

1.21

FILE: 1.21_MH21S2.dwg REV: 02/09/2010

27650 Groesbeck Hwy • Roseville, MI 48066-2759 • Phone 586.775.7211 • Fax 586.775.4545 • Toll Free 800.526.7968 • e-mail: sales@peninsularcylinders.com • www.peninsularcylinders.com

CAP FIXED SPHERICAL EYE

Peninsular Mounting Style: **MH 22**

Heavy Duty Steel Air Cylinder

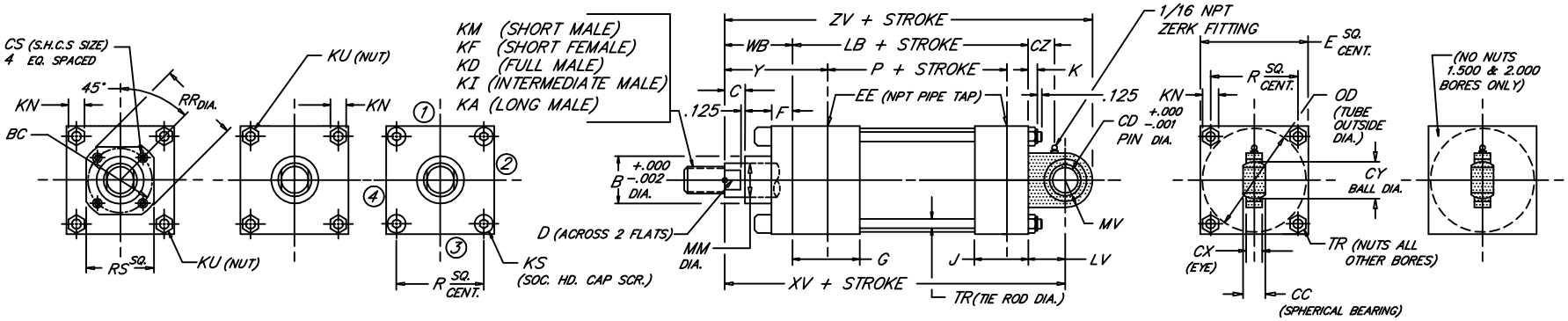

BORE	ROD MM	KM & KF (ROD THREAD X LENGTH)	KD (ROD THREAD X LENGTH)	KI (ROD THREAD X LENGTH)	KA (ROD THREAD X LENGTH)	B	BC	C	CC	CD	CS	CX	CY	CZ	D	E	EE (NPT)	F	G	J	K	KN	KS	KU	LV	LB	MV	OD	P	R	RR	RS	TR	WB	XV	Y	ZV
1.500	.625	7/16"-20 x .750	5/8"-18 x .750	1/2"-20 x .750	1/2"-20 x 1.125	1.124	---	.375	.437	.500	---	.375	.710	.438	.500	2.000	3/8	.375	1.500	1.000	.312	.438	---	.250	.812	3.625	.750	1.750	2.335	1.428	---	---	.250	1.000	5.437	1.875	6.187
	1.000	3/4"-16 x 1.125	1"-14 x 1.125	7/8"-14 x 1.125	7/8"-14 x 1.875	1.499		.500							.875																			1.375	5.812	2.250	6.582
2.000	.625	7/16"-20 x .750	5/8"-18 x .750	1/2"-20 x .750	1/2"-20 x 1.125	1.124	---	.375	.437	.500	---	.375	.710	.438	.500	2.500	3/8	.375	1.500	1.000	.344	.500	---	.312	.812	3.625	.750	2.250	2.335	1.838	---	---	.312	1.000	5.437	1.875	6.187
	1.000	3/4"-16 x 1.125	1"-14 x 1.125	7/8"-14 x 1.125	7/8"-14 x 1.875	1.499		.500							.875																			1.375	5.812	2.250	6.562
	1.375	1"-14 x 1.625	1 3/8"-12 x 1.625	1 1/4"-12 x 1.625	1 1/4"-12 x 2.500	1.999		.625							1.125																			1.625	6.062	2.500	6.812
2.500	.625	7/16"-20 x .750	5/8"-18 x .750	1/2"-20 x .750	1/2"-20 x 1.125	1.124	---	.375	.437	.500	---	.375	.710	.438	.500	3.000	3/8	.375	1.500	1.000	.344	.500	.312	---	.812	3.750	.750	2.750	2.460	2.192	---	---	.312	1.000	5.562	1.875	6.312
	1.000	3/4"-16 x 1.125	1"-14 x 1.125	7/8"-14 x 1.125	7/8"-14 x 1.875	1.499		.500							.875																			1.375	5.937	2.250	6.687
	1.375	1"-14 x 1.625	1 3/8"-12 x 1.625	1 1/4"-12 x 1.625	1 1/4"-12 x 2.500	1.999		.625							1.125																			1.625	6.187	2.500	6.937
	1.750	1 1/4"-12 x 2.000	1 3/4"-12 x 2.000	1 1/2"-12 x 2.000	1 1/2"-12 x 3.000	2.374		.750							1.500																			1.875	6.437	2.750	7.187
3.250	1.000	3/4"-16 x 1.125	1"-14 x 1.125	7/8"-14 x 1.125	7/8"-14 x 1.875	1.499	---	.500	.656	.750	---	.562	1.086	.625	.875	3.750	1/2	.625	1.750	1.250	.438	.562	.375	---	1.187	4.250	1.250	3.500	2.750	2.758	---	---	.375	1.375	6.812	2.375	8.062
	1.375	1"-14 x 1.625	1 3/8"-12 x 1.625	1 1/4"-12 x 1.625	1 1/4"-12 x 2.500	1.999		.625							1.125																			1.625	7.062	2.625	8.312
	1.750	1 1/4"-12 x 2.000	1 3/4"-12 x 2.000	1 1/2"-12 x 2.000	1 1/2"-12 x 3.000	2.374		.750							1.500																			1.875	7.312	2.875	8.562
	2.000	1 1/2"-12 x 2.250	2"-12 x 2.250	1 3/4"-12 x 2.250	1 3/4"-12 x 3.500	2.624		.875							1.688																			2.000	7.437	3.000	8.687
4.000	1.000	3/4"-16 x 1.125	1"-14 x 1.125	7/8"-14 x 1.125	7/8"-14 x 1.875	1.499	2.562	.500	.656	.750	.250	.562	1.086	.625	.875	4.500	1/2	.625	1.750	1.250	.438	.562	---	.375	1.187	4.250	1.250	4.250	2.750	3.323	2.969	2.500	.375	1.375	6.812	2.375	8.062
	1.375	1"-14 x 1.625	1 3/8"-12 x 1.625	1 1/4"-12 x 1.625	1 1/4"-12 x 2.500	1.999	2.562	.625			.250				1.125								---	.375							2.969	2.500		1.625	7.062	2.625	8.312
	1.750	1 1/4"-12 x 2.000	1 3/4"-12 x 2.000	1 1/2"-12 x 2.000	1 1/2"-12 x 3.000	2.374	3.267	.750			.312				1.500								---	.375							3.734	3.000		1.875	7.312	2.875	8.562
	2.000	1 1/2"-12 x 2.250	2"-12 x 2.250	1 3/4"-12 x 2.250	1 3/4"-12 x 3.500	2.624	---	.875			---				1.688								.375	---							---	---		2.000	7.437	3.000	8.687
	2.500	1 7/8"-12 x 3.000	2 1/2"-12 x 3.000	2 1/4"-12 x 3.000	2 1/4"-12 x 4.500	3.124	---	1.000			---				2.062								.375	---							---	---		2.250	7.687	3.250	8.937
5.000	1.000	3/4"-16 x 1.125	1"-14 x 1.125	7/8"-14 x 1.125	7/8"-14 x 1.875	1.499	2.562	.500	.656	.750	.250	.562	1.086	.625	.875	5.500	1/2	.625	1.750	1.250	.594	.750	---	.500	1.187	4.500	1.250	5.250	3.000	4.101	2.969	2.500	.500	1.375	7.062	2.375	8.312
	1.375	1"-14 x 1.625	1 3/8"-12 x 1.625	1 1/4"-12 x 1.625	1 1/4"-12 x 2.500	1.999	2.562	.625			.250				1.125								---	.500							2.969	2.500		1.625	7.312	2.625	8.562
	1.750	1 1/4"-12 x 2.000	1 3/4"-12 x 2.000	1 1/2"-12 x 2.000	1 1/2"-12 x 3.000	2.374	3.267	.750			.312				1.500								---	.500							3.734	3.000		1.875	7.562	2.875	8.812
	2.000	1 1/2"-12 x 2.250	2"-12 x 2.250	1 3/4"-12 x 2.250	1 3/4"-12 x 3.500	2.624	3.812	.875			.312				1.688								---	.500							4.312	3.750		2.000	7.687	3.000	8.937
	2.500	1 7/8"-12 x 3.000	2 1/2"-12 x 3.000	2 1/4"-12 x 3.000	2 1/4"-12 x 4.500	3.124	3.812	1.000			.312				2.062								---	.500							4.312	3.750		2.250	7.937	3.250	9.187
	3.000	2 1/4"-12 x 3.500	3"-12 x 3.500	2 3/4"-12 x 3.500	2 3/4"-12 x 5.500	3.749	---	1.000			---				2.625								.500	---							---	---		2.250	7.937	3.250	9.187
	3.500	2 1/2"-12 x 3.500	3 1/2"-12 x 3.500	3 1/4"-12 x 3.500	3 1/4"-12 x 6.500	4.249	---	1.000			---				3.000								.500	---							---	---		2.250	7.937	3.250	9.187
6.000	1.375	1"-14 x 1.625	1 3/8"-12 x 1.625	1 1/4"-12 x 1.625	1 1/4"-12 x 2.500	1.999	3.267	.625	.875	1.000	.312	.750	1.436	.812	1.125	6.500	3/4	.625	2.000	1.500	.594	.750	---	.500	1.562	5.000	1.500	6.250	3.250	4.879	3.734	3.000	.500	1.625	8.187	2.750	9.687
	1.750	1 1/4"-12 x 2.000	1 3/4"-12 x 2.000	1 1/2"-12 x 2.000	1 1/2"-12 x 3.000	2.374	3.267	.750			.312				1.500			.625					---	.500							3.734	3.000		1.875	8.437	3.000	9.937
	2.000	1 1/2"-12 x 2.250	2"-12 x 2.250	1 3/4"-12 x 2.250	1 3/4"-12 x 3.500	2.624	3.812	.875			.312				1.688			.625					---	.500							4.312	3.750		2.000	8.562	3.125	10.062
	2.500	1 7/8"-12 x 3.000	2 1/2"-12 x 3.000	2 1/4"-12 x 3.000	2 1/4"-12 x 4.500	3.124	3.812	1.000			.312				2.062			.625					---	.500							4.312	3.750		2.250	8.812	3.375	10.312
	3.000	2 1/4"-12 x 3.500	3"-12 x 3.500	2 3/4"-12 x 3.500	2 3/4"-12 x 5.500	3.749	4.700	1.000			.375				2.625			.625					---	.500							5.562	4.500		2.250	8.812	3.375	10.312
	3.500	2 1/2"-12 x 3.500	3 1/2"-12 x 3.500	3 1/4"-12 x 3.500	3 1/4"-12 x 6.500	4.249	5.200	1.000			.375				3.000			.625					---	.500							6.062	5.000		2.250	8.812	3.375	10.312
	4.000	3"-12 x 4.000	4"-12 x 4.000	3 3/4"-12 x 4.000	3 3/4"-12 x 7.500	4.749	---	1.000			---				3.375			.750					.500	---							---	---		2.250	8.812	3.375	10.312

FILE: 1.22_MH22S2.dwg REV: 02/09/2010

27650 Groesbeck Hwy • Roseville, MI 48066-2759 • Phone 586.775.7211 • Fax 586.775.4545 • Toll Free 800.526.7968 • e-mail: sales@peninsularcylinders.com • www.peninsularcylinders.com

CAP FIXED SPHERICAL EYE

Peninsular Mounting Style: **MH 22**

Heavy Duty Steel Air Cylinder

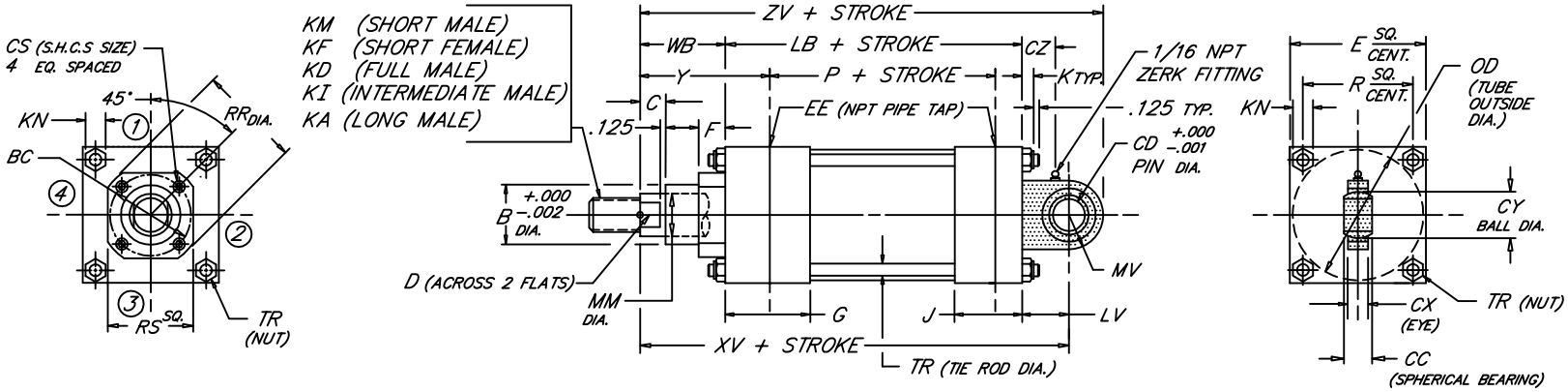

BORE	ROD MM	ROD THREAD X LENGTH KM & KF	KD	KI	KA	B	BC	C	CC	CD	CS	CX	CY	CZ	D	E	NPT EE	F	G	J	K	KN	LV	LB	MV	OD	P	R	RR	RS	TR	WB	XV	Y	ZV
8.000	1.375	1"-14 x 1.625	1 3/8"-12 x 1.625	1 1/4"-12 x 1.625	1 1/4"-12 x 2.500	1.999	3.267	.625			.312				1.125														3.734	3.000		1.625	8.312	2.750	9.812
	1.750	1 1/4"-12 x 2.000	1 3/4"-12 x 2.000	1 1/2"-12 x 2.000	1 1/2"-12 x 3.000	2.374	3.267	.750			.312				1.500														3.734	3.000		1.875	8.562	3.000	10.062
	2.000	1 1/2"-12 x 2.250	2"-12 x 2.250	1 3/4"-12 x 2.250	1 3/4"-12 x 3.500	2.624	3.812	.875			.312				1.688														4.312	3.750		2.000	8.687	3.125	10.187
	2.500	1 7/8"-12 x 3.000	2 1/2"-12 x 3.000	2 1/4"-12 x 3.000	2 1/4"-12 x 4.500	3.124	3.812	1.000			.312				2.062														4.312	3.750		2.250	8.937	3.375	10.437
	3.000	2 1/4"-12 x 3.500	3"-12 x 3.500	2 3/4"-12 x 3.500	2 3/4"-12 x 5.500	3.749	4.700	1.000			.375				2.625														5.562	4.500		2.250	8.937	3.375	10.437
	3.500	2 1/2"-12 x 3.500	3 1/2"-12 x 3.500	3 1/4"-12 x 3.500	3 1/4"-12 x 6.500	4.249	5.200	1.000	.875	1.000	.375	.750	1.436	.812	3.000	8.500	3/4	.625	2.000	1.500	.750	.938	1.562	5.125	1.500	8.450	3.375	6.435	6.062	5.000	.625	2.250	8.937	3.375	10.437
	4.000	3"-12 x 4.000	4"-12 x 4.000	3 3/4"-12 x 4.000	3 3/4"-12 x 7.500	4.749	5.700	1.000			.375				3.375														6.562	5.500		2.250	8.937	3.375	10.437
	4.500	3 1/4"-12 x 4.500	4 1/2"-12 x 4.500	4 1/4"-12 x 4.500	4 1/4"-12 x 8.250	5.249	6.200	1.000			.375				3.875														7.062	6.000		2.250	8.937	3.375	10.437
	5.000	3 1/2"-12 x 5.000	5"-12 x 5.000	4 3/4"-12 x 5.000	4 3/4"-12 x 9.000	5.749	6.700	1.000			.375				4.250														7.562	6.500		2.250	8.937	3.375	10.437
	5.500	4"-12 x 5.500	5 1/2"-12 x 5.500	5 1/4"-12 x 5.500	5 1/4"-12 x 10.000	6.249	7.125	1.000			.375				4.625														7.938	7.000		2.250	8.937	3.375	10.437
10.000	1.750	1 1/4"-12 x 2.000	1 3/4"-12 x 2.000	1 1/2"-12 x 2.000	1 1/2"-12 x 3.000	2.374	3.812	.750			.312				1.500														4.312	3.750		1.875	10.187	3.062	11.937
	2.000	1 1/2"-12 x 2.250	2"-12 x 2.250	1 3/4"-12 x 2.250	1 3/4"-12 x 3.500	2.624	3.812	.875			.312				1.688														4.312	3.750		2.000	10.312	3.187	12.062
	2.500	1 7/8"-12 x 3.000	2 1/2"-12 x 3.000	2 1/4"-12 x 3.000	2 1/4"-12 x 4.500	3.124	3.812	1.000			.312				2.062														4.312	3.750		2.250	10.562	3.437	12.312
	3.000	2 1/4"-12 x 3.500	3"-12 x 3.500	2 3/4"-12 x 3.500	2 3/4"-12 x 5.500	3.749	4.700	1.000			.375				2.625														5.562	4.500		2.250	10.562	3.437	12.312
	3.500	2 1/2"-12 x 3.500	3 1/2"-12 x 3.500	3 1/4"-12 x 3.500	3 1/4"-12 x 6.500	4.249	5.200	1.000	1.187	1.375	.375	1.031	1.926	.906	3.000	10.625	1	.625	2.250	2.000	.875	1.062	1.937	6.375	1.750	10.450	4.250	7.920	6.062	5.000	.750	2.250	10.562	3.437	12.312
	4.000	3"-12 x 4.000	4"-12 x 4.000	3 3/4"-12 x 4.000	3 3/4"-12 x 7.500	4.749	5.700	1.000			.375				3.375														6.562	5.500		2.250	10.562	3.437	12.312
	4.500	3 1/4"-12 x 4.500	4 1/2"-12 x 4.500	4 1/4"-12 x 4.500	4 1/4"-12 x 8.250	5.249	6.200	1.000			.375				3.875														7.062	6.000		2.250	10.562	3.437	12.312
	5.000	3 1/2"-12 x 5.000	5"-12 x 5.000	4 3/4"-12 x 5.000	4 3/4"-12 x 9.000	5.749	6.700	1.000			.375				4.250														7.562	6.500		2.250	10.562	3.437	12.312
	5.500	4"-12 x 5.500	5 1/2"-12 x 5.500	5 1/4"-12 x 5.500	5 1/4"-12 x 10.000	6.249	7.125	1.000			.375				4.625														7.938	7.000		2.250	10.562	3.437	12.312
12.000	2.000	1 1/2"-12 x 2.250	2"-12 x 2.250	1 3/4"-12 x 2.250	1 3/4"-12 x 3.500	2.624	3.812	.875			.312				1.688														4.312	3.750		2.000	11.312	3.187	13.562
	2.500	1 7/8"-12 x 3.000	2 1/2"-12 x 3.000	2 1/4"-12 x 3.000	2 1/4"-12 x 4.500	3.124	3.812	1.000			.312				2.062														4.312	3.750		2.250	11.562	3.437	13.812
	3.000	2 1/4"-12 x 3.500	3"-12 x 3.500	2 3/4"-12 x 3.500	2 3/4"-12 x 5.500	3.749	4.700	1.000			.375				2.625														5.562	4.500		2.250	11.562	3.437	13.812
	3.500	2 1/2"-12 x 3.500	3 1/2"-12 x 3.500	3 1/4"-12 x 3.500	3 1/4"-12 x 6.500	4.249	5.200	1.000	1.531	1.750	.375	1.312	2.515	1.094	3.000	12.750	1	.625	2.250	2.000	.875	1.062	2.437	6.875	2.250	12.450	4.750	9.405	6.062	5.000	.750	2.250	11.562	3.437	13.812
	4.000	3"-12 x 4.000	4"-12 x 4.000	3 3/4"-12 x 4.000	3 3/4"-12 x 7.500	4.749	5.700	1.000			.375				3.375														6.562	5.500		2.250	11.562	3.437	13.812
	4.500	3 1/4"-12 x 4.500	4 1/2"-12 x 4.500	4 1/4"-12 x 4.500	4 1/4"-12 x 8.250	5.249	6.200	1.000			.375				3.875														7.062	6.000		2.250	11.562	3.437	13.812
	5.000	3 1/2"-12 x 5.000	5"-12 x 5.000	4 3/4"-12 x 5.000	4 3/4"-12 x 9.000	5.749	6.700	1.000			.375				4.250														7.562	6.500		2.250	11.562	3.437	13.812
	5.500	4"-12 x 5.500	5 1/2"-12 x 5.500	5 1/4"-12 x 5.500	5 1/4"-12 x 10.000	6.249	7.125	1.000			.375				4.625														7.938	7.000		2.250	11.562	3.437	13.812
14.000	2.500	1 7/8"-12 x 3.000	2 1/2"-12 x 3.000	2 1/4"-12 x 3.000	2 1/4"-12 x 4.500	3.124	3.812				.312				2.062														4.312	3.750					
	3.000	2 1/4"-12 x 3.500	3"-12 x 3.500	2 3/4"-12 x 3.500	2 3/4"-12 x 5.500	3.749	4.700				.375				2.625														5.562	4.500					
	3.500	2 1/2"-12 x 3.500	3 1/2"-12 x 3.500	3 1/4"-12 x 3.500	3 1/4"-12 x 6.500	4.249	5.200				.375				3.000														6.062	5.000					
	4.000	3"-12 x 4.000	4"-12 x 4.000	3 3/4"-12 x 4.000	3 3/4"-12 x 7.500	4.749	5.700	1.000	1.750	2.000	.375	1.500	2.872	1.156	3.375	14.750	1 1/4	.625	2.750	2.250	1.000	1.250	2.687	8.125	2.750	14.450	5.625	10.889	6.562	5.500	.875	2.250	13.062	3.688	15.812
	4.500	3 1/4"-12 x 4.500	4 1/2"-12 x 4.500	4 1/4"-12 x 4.500	4 1/4"-12 x 8.250	5.249	6.200				.375				3.875														7.062	6.000					
	5.000	3 1/2"-12 x 5.000	5"-12 x 5.000	4 3/4"-12 x 5.000	4 3/4"-12 x 9.000	5.749	6.700				.375				4.250														7.562	6.500					
	5.500	4"-12 x 5.500	5 1/2"-12 x 5.500	5 1/4"-12 x 5.500	5 1/4"-12 x 10.000	6.249	7.125				.375				4.625														7.938	7.000					
BORE	MM	KM & KF	KD	KI	KA	B	BC	C	CC	CD	CS	CX	CY	CZ	D	E	EE	F	G	J	K	KN	LV	LB	MV	OD	P	R	RR	RS	TR	WB	XV	Y	ZV

FILE: 1.22_MH22L2.dwg REV: 02/09/2010

27650 Groesbeck Hwy • Roseville, MI 48066-2759 • Phone 586.775.7211 • Fax 586.775.4545 • Toll Free 800.526.7968 • e-mail: sales@peninsularcylinders.com • www.peninsularcylinders.com

CAP DETACHABLE CLEVIS

Heavy Duty Steel Air Cylinder

Peninsular Mounting Style: **MH 24**

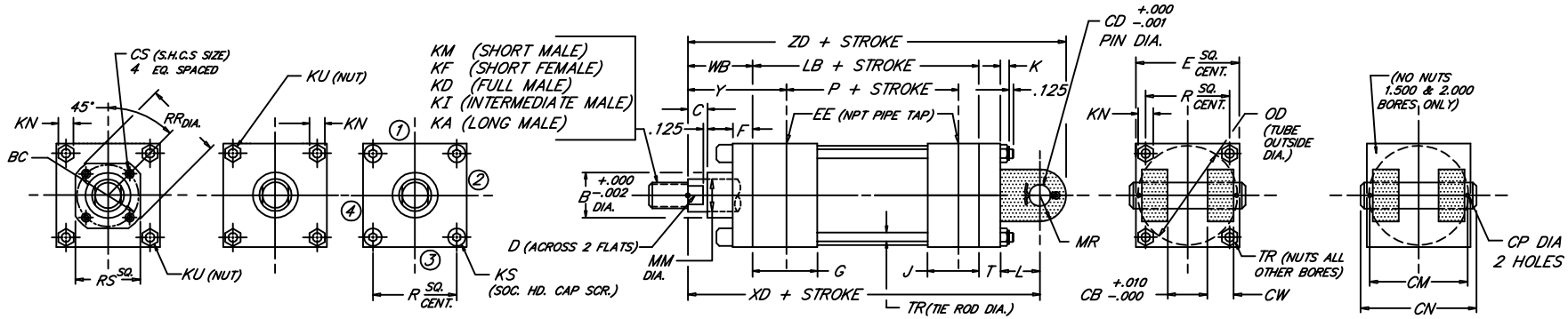

BORE	ROD MM	ROD THREAD X LENGTH KM & KF	KD	KI	KA	B	BC	C	CB	CD	CM	CN	CP	CS	CW	D	E	NPT EE	F	G	J	K	KN	KS	KU	L	LB	MR	OD	P	R	RR	RS	T	TR	WB	XD	Y	ZD
1.500	.625	7/16"-20 x .750	5/8"-18 x .750	1/2"-20 x .750	1/2"-20 x 1.125	1.124	---	.375	.765	.500	1.938	2.281	.106	---	.500	.500	2.000	3/8	.375	1.500	1.000	.312	.438	---	.250	.750	3.625	.625	1.750	2.335	1.428	---	---	.375	.250	1.000	5.750	1.875	6.375
	1.000	3/4"-16 x 1.125	1"-14 x 1.125	7/8"-14 x 1.125	7/8"-14 x 1.875	1.499		.500								.875																				1.375	6.125	2.250	6.750
	1.375																																			1.375	6.125	2.250	6.750
2.000	.625	7/16"-20 x .750	5/8"-18 x .750	1/2"-20 x .750	1/2"-20 x 1.125	1.124	---	.375	.765	.500	1.938	2.281	.106	---	.500	.500	2.500	3/8	.375	1.500	1.000	.344	.500	---	.312	.750	3.625	.625	2.250	2.335	1.838	---	---	.375	.312	1.000	5.750	1.875	6.375
	1.000	3/4"-16 x 1.125	1"-14 x 1.125	7/8"-14 x 1.125	7/8"-14 x 1.875	1.499		.500								.875																				1.375	6.125	2.250	6.750
	1.375	1"-14 x 1.625	1 3/8"-12 x 1.625	1 1/4"-12 x 1.625	1 1/4"-12 x 2.500	1.999		.625								1.125																				1.625	6.375	2.500	7.000
2.500	.625	7/16"-20 x .750	5/8"-18 x .750	1/2"-20 x .750	1/2"-20 x 1.125	1.124	---	.375	.765	.500	1.938	2.281	.106	---	.500	.500	3.000	3/8	.375	1.500	1.000	.344	.500	.312	---	.750	3.750	.625	2.750	2.460	2.192	---	---	.375	.312	1.000	5.875	1.875	6.500
	1.000	3/4"-16 x 1.125	1"-14 x 1.125	7/8"-14 x 1.125	7/8"-14 x 1.875	1.499		.500								.875																				1.375	6.250	2.250	6.875
	1.375	1"-14 x 1.625	1 3/8"-12 x 1.625	1 1/4"-12 x 1.625	1 1/4"-12 x 2.500	1.999		.625								1.125																				1.625	6.500	2.500	7.125
	1.750	1 1/4"-12 x 2.000	1 3/4"-12 x 2.000	1 1/2"-12 x 2.000	1 1/2"-12 x 3.000	2.374		.750								1.500																				1.875	6.750	2.750	7.375
3.250	1.000	3/4"-16 x 1.125	1"-14 x 1.125	7/8"-14 x 1.125	7/8"-14 x 1.875	1.499	---	.500	1.265	.750	2.719	3.094	.140	---	.625	.875	3.750	1/2	.625	1.750	1.250	.438	.562	.375	---	1.250	4.250	.875	3.500	2.750	2.758	---	---	.625	.375	1.375	7.500	2.375	8.375
	1.375	1"-14 x 1.625	1 3/8"-12 x 1.625	1 1/4"-12 x 1.625	1 1/4"-12 x 2.500	1.999		.625								1.125																				1.625	7.750	2.625	8.625
	1.750	1 1/4"-12 x 2.000	1 3/4"-12 x 2.000	1 1/2"-12 x 2.000	1 1/2"-12 x 3.000	2.374		.750								1.500																				1.875	8.000	2.875	8.875
	2.000	1 1/2"-12 x 2.250	2"-12 x 2.250	1 3/4"-12 x 2.250	1 3/4"-12 x 3.500	2.624		.875								1.688																				2.000	8.125	3.000	9.000
4.000	1.000	3/4"-16 x 1.125	1"-14 x 1.125	7/8"-14 x 1.125	7/8"-14 x 1.875	1.499	2.562	.500	1.265	.750	2.719	3.094	.140	.250	.625	.875	4.500	1/2	.625	1.750	1.250	.438	.562	---	.375	1.250	4.250	.875	4.250	2.750	3.323	2.969	2.500	.625	.375	1.375	7.500	2.375	8.375
	1.375	1"-14 x 1.625	1 3/8"-12 x 1.625	1 1/4"-12 x 1.625	1 1/4"-12 x 2.500	1.999	2.562	.625						.250		1.125								---	.375							2.969	2.500			1.625	7.750	2.625	8.625
	1.750	1 1/4"-12 x 2.000	1 3/4"-12 x 2.000	1 1/2"-12 x 2.000	1 1/2"-12 x 3.000	2.374	3.267	.750						.312		1.500								---	.375							3.734	3.000			1.875	8.000	2.875	8.875
	2.000	1 1/2"-12 x 2.250	2"-12 x 2.250	1 3/4"-12 x 2.250	1 3/4"-12 x 3.500	2.624	---	.875						---		1.688								.375	---							---	---			2.000	8.125	3.000	9.000
	2.500	1 7/8"-12 x 3.000	2 1/2"-12 x 3.000	2 1/4"-12 x 3.000	2 1/4"-12 x 4.500	3.124	---	1.000						---		2.062								.375	---							---	---			2.250	8.375	3.250	9.250
5.000	1.000	3/4"-16 x 1.125	1"-14 x 1.125	7/8"-14 x 1.125	7/8"-14 x 1.875	1.499	2.562	.500	1.265	.750	2.719	3.094	.140	.250	.625	.875	5.500	1/2	.625	1.750	1.250	.594	.750	---	.500	1.250	4.500	.875	5.250	3.000	4.101	2.969	2.500	.625	.500	1.375	7.750	2.375	8.625
	1.375	1"-14 x 1.625	1 3/8"-12 x 1.625	1 1/4"-12 x 1.625	1 1/4"-12 x 2.500	1.999	2.562	.625						.250		1.125								---	.500							2.969	2.500			1.625	8.000	2.625	8.875
	1.750	1 1/4"-12 x 2.000	1 3/4"-12 x 2.000	1 1/2"-12 x 2.000	1 1/2"-12 x 3.000	2.374	3.267	.750						.312		1.500								---	.500							3.734	3.000			1.875	8.250	2.875	9.125
	2.000	1 1/2"-12 x 2.250	2"-12 x 2.250	1 3/4"-12 x 2.250	1 3/4"-12 x 3.500	2.624	3.812	.875						.312		1.688								---	.500							4.312	3.750			2.000	8.375	3.000	9.250
	2.500	1 7/8"-12 x 3.000	2 1/2"-12 x 3.000	2 1/4"-12 x 3.000	2 1/4"-12 x 4.500	3.124	3.812	1.000						.312		2.062								---	.500							4.312	3.750			2.250	8.625	3.250	9.500
	3.000	2 1/4"-12 x 3.500	3"-12 x 3.500	2 3/4"-12 x 3.500	2 3/4"-12 x 5.500	3.749	---	1.000						---		2.625								.500	---							---	---			2.250	8.625	3.250	9.500
	3.500	2 1/2"-12 x 3.500	3 1/2"-12 x 3.500	3 1/4"-12 x 3.500	3 1/4"-12 x 6.500	4.249	---	1.000						---		3.000								.500	---							---	---			2.250	8.625	3.250	9.500
6.000	1.375	1"-14 x 1.625	1 3/8"-12 x 1.625	1 1/4"-12 x 1.625	1 1/4"-12 x 2.500	1.999	3.267	.625	1.515	1.000	3.219	3.594	.140	.312	.750	1.125	6.500	3/4	.625	2.000	1.500	.594	.750	---	.500	1.500	5.000	1.125	6.250	3.250	4.879	3.734	3.000	.750	.500	1.625	8.875	2.750	10.000
	1.750	1 1/4"-12 x 2.000	1 3/4"-12 x 2.000	1 1/2"-12 x 2.000	1 1/2"-12 x 3.000	2.374	3.267	.750						.312		1.500			.625					---	.500							3.734	3.000			1.875	9.125	3.000	10.250
	2.000	1 1/2"-12 x 2.250	2"-12 x 2.250	1 3/4"-12 x 2.250	1 3/4"-12 x 3.500	2.624	3.812	.875						.312		1.688			.625					---	.500							4.312	3.750			2.000	9.250	3.125	10.375
	2.500	1 7/8"-12 x 3.000	2 1/2"-12 x 3.000	2 1/4"-12 x 3.000	2 1/4"-12 x 4.500	3.124	3.812	1.000						.312		2.062			.625					---	.500							4.312	3.750			2.250	9.500	3.375	10.625
	3.000	2 1/4"-12 x 3.500	3"-12 x 3.500	2 3/4"-12 x 3.500	2 3/4"-12 x 5.500	3.749	4.700	1.000						.375		2.625			.625					---	.500							5.562	4.500			2.250	9.500	3.375	10.625
	3.500	2 1/2"-12 x 3.500	3 1/2"-12 x 3.500	3 1/4"-12 x 3.500	3 1/4"-12 x 6.500	4.249	5.200	1.000						.375		3.000			.625					---	.500							6.062	5.000			2.250	9.500	3.375	10.625
	4.000	3"-12 x 4.000	4"-12 x 4.000	3 3/4"-12 x 4.000	3 3/4"-12 x 7.500	4.749	---	1.000						---		3.375			.750					.500	---							---	---			2.250	9.500	3.375	10.625
BORE	MM	KM & KF	KD	KI	KA	B	BC	C	CB	CD	CM	CN	CP	CS	CW	D	E	EE	F	G	J	K	KN	KS	KU	L	LB	MR	OD	P	R	RR	RS	T	TR	WB	XD	Y	ZD

FILE: 1.24_MH24S2.dwg REV: 02/09/2010

27650 Groesbeck Hwy • Roseville, MI 48066-2759 • Phone 586.775.7211 • Fax 586.775.4545 • Toll Free 800.526.7968 • e-mail: sales@peninsularcylinders.com • www.peninsularcylinders.com

CAP FIXED EYE

Heavy Duty Steel Air Cylinder

Peninsular Mounting Style: **MH 25**

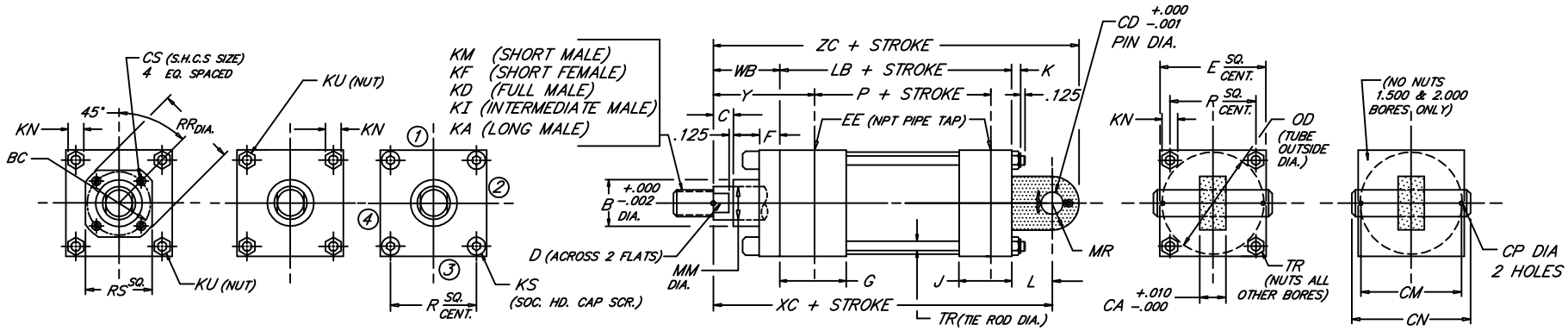

BORE	ROD MM	ROD THREAD X LENGTH KM & KF	KD	KI	KA	B	BC	C	CA	CD	CM	CN	CP	CS	D	E	NPT EE	F	G	J	K	KN	KS	KU	L	LB	MR	OD	P	R	RR	RS	TR	WB	XC	Y	ZC
1.500	.625	7/16"-20 x .750	5/8"-18 x .750	1/2"-20 x .750	1/2"-20 x 1.125	1.124	---	.375	.735	.500	1.938	2.281	.106	---	.500	2.000	3/8	.375	1.500	1.000	.312	.438	---	.250	.750	3.625	.500	1.750	2.335	1.428	---	---	.250	1.000	5.375	1.875	5.875
	1.000	3/4"-16 x 1.125	1"-14 x 1.125	7/8"-14 x 1.125	7/8"-14 x 1.875	1.499		.500							.875																				1.375	5.750	2.250	6.250
2.000	.625	7/16"-20 x .750	5/8"-18 x .750	1/2"-20 x .750	1/2"-20 x 1.125	1.124	---	.375	.735	.500	1.938	2.281	.106	---	.500	2.500	3/8	.375	1.500	1.000	.344	.500	---	.312	.750	3.625	.500	2.250	2.335	1.838	---	---	.312	1.000	5.375	1.875	5.875
	1.000	3/4"-16 x 1.125	1"-14 x 1.125	7/8"-14 x 1.125	7/8"-14 x 1.875	1.499		.500							.875																				1.375	5.750	2.250	6.250
	1.375	1"-14 x 1.625	1 3/8"-12 x 1.625	1 1/4"-12 x 1.625	1 1/4"-12 x 2.500	1.999		.625							1.125																				1.625	6.000	2.500	6.500
2.500	.625	7/16"-20 x .750	5/8"-18 x .750	1/2"-20 x .750	1/2"-20 x 1.125	1.124	---	.375	.735	.500	1.938	2.281	.106	---	.500	3.000	3/8	.375	1.500	1.000	.344	.500	.312	---	.750	3.750	.500	2.750	2.460	2.192	---	---	.312	1.000	5.500	1.875	6.000
	1.000	3/4"-16 x 1.125	1"-14 x 1.125	7/8"-14 x 1.125	7/8"-14 x 1.875	1.499		.500							.875																				1.375	5.875	2.250	6.375
	1.375	1"-14 x 1.625	1 3/8"-12 x 1.625	1 1/4"-12 x 1.625	1 1/4"-12 x 2.500	1.999		.625							1.125																				1.625	6.125	2.500	6.625
	1.750	1 1/4"-12 x 2.000	1 3/4"-12 x 2.000	1 1/2"-12 x 2.000	1 1/2"-12 x 3.000	2.374		.750							1.500																				1.875	6.375	2.750	6.875
3.250	1.000	3/4"-16 x 1.125	1"-14 x 1.125	7/8"-14 x 1.125	7/8"-14 x 1.875	1.499		.500	1.235	.750	2.719	3.094	.140	---	.875	3.750	1/2	.625	1.750	1.250	.438	.562	.375	---	1.250	4.250	.750	3.500	2.750	2.758	---	---	.375	1.375	6.875	2.375	7.625
	1.375	1"-14 x 1.625	1 3/8"-12 x 1.625	1 1/4"-12 x 1.625	1 1/4"-12 x 2.500	1.999		.625							1.125																				1.625	7.125	2.625	7.875
	1.750	1 1/4"-12 x 2.000	1 3/4"-12 x 2.000	1 1/2"-12 x 2.000	1 1/2"-12 x 3.000	2.374		.750							1.500																				1.875	7.375	2.875	8.125
	2.000	1 1/2"-12 x 2.250	2"-12 x 2.250	1 3/4"-12 x 2.250	1 3/4"-12 x 3.500	2.624		.875							1.688																				2.000	7.500	3.000	8.250
4.000	1.000	3/4"-16 x 1.125	1"-14 x 1.125	7/8"-14 x 1.125	7/8"-14 x 1.875	1.499	2.562	.500	1.235	.750	2.719	3.094	.140	.250	.875	4.500	1/2	.625	1.750	1.250	.438	.562	---	.375	1.250	4.250	.750	4.250	2.750	3.323	2.969	2.500	.375	1.375	6.875	2.375	7.625
	1.375	1"-14 x 1.625	1 3/8"-12 x 1.625	1 1/4"-12 x 1.625	1 1/4"-12 x 2.500	1.999	2.562	.625						.250	1.125								---	.375							2.969	2.500		1.625	7.125	2.625	7.875
	1.750	1 1/4"-12 x 2.000	1 3/4"-12 x 2.000	1 1/2"-12 x 2.000	1 1/2"-12 x 3.000	2.374	3.267	.750						.312	1.500								---	.375							3.734	3.000		1.875	7.375	2.875	8.125
	2.000	1 1/2"-12 x 2.250	2"-12 x 2.250	1 3/4"-12 x 2.250	1 3/4"-12 x 3.500	2.624	---	.875						---	1.688								.375	---							---	---		2.000	7.500	3.000	8.250
	2.500	1 7/8"-12 x 3.000	2 1/2"-12 x 3.000	2 1/4"-12 x 3.000	2 1/4"-12 x 4.500	3.124	---	1.000						---	2.062								.375	---							---	---		2.250	7.750	3.250	8.500
5.000	1.000	3/4"-16 x 1.125	1"-14 x 1.125	7/8"-14 x 1.125	7/8"-14 x 1.875	1.499	2.562	.500	1.235	.750	2.719	3.094	.140	.250	.875	5.500	1/2	.625	1.750	1.250	.594	.750	---	.500	1.250	4.500	.750	5.250	3.000	4.101	2.969	2.500	.500	1.375	7.125	2.375	7.875
	1.375	1"-14 x 1.625	1 3/8"-12 x 1.625	1 1/4"-12 x 1.625	1 1/4"-12 x 2.500	1.999	2.562	.625						.250	1.125								---	.500							2.969	2.500		1.625	7.375	2.625	8.125
	1.750	1 1/4"-12 x 2.000	1 3/4"-12 x 2.000	1 1/2"-12 x 2.000	1 1/2"-12 x 3.000	2.374	3.267	.750						.312	1.500								---	.500							3.734	3.000		1.875	7.625	2.875	8.375
	2.000	1 1/2"-12 x 2.250	2"-12 x 2.250	1 3/4"-12 x 2.250	1 3/4"-12 x 3.500	2.624	3.812	.875						.312	1.688								---	.500							4.312	3.750		2.000	7.750	3.000	8.500
	2.500	1 7/8"-12 x 3.000	2 1/2"-12 x 3.000	2 1/4"-12 x 3.000	2 1/4"-12 x 4.500	3.124	3.812	1.000						.312	2.062								---	.500							4.312	3.750		2.250	8.000	3.250	8.750
	3.000	2 1/4"-12 x 3.500	3"-12 x 3.500	2 3/4"-12 x 3.500	2 3/4"-12 x 5.500	3.749	---	1.000						---	2.625								.500	---							---	---		2.250	8.000	3.250	8.750
	3.500	2 1/2"-12 x 3.500	3 1/2"-12 x 3.500	3 1/4"-12 x 3.500	3 1/4"-12 x 6.500	4.249	---	1.000						---	3.000								.500	---							---	---		2.250	8.000	3.250	8.750
6.000	1.375	1"-14 x 1.625	1 3/8"-12 x 1.625	1 1/4"-12 x 1.625	1 1/4"-12 x 2.500	1.999	3.267	.625	1.485	1.000	3.219	3.594	.140	.312	1.125	6.500	3/4	.625	2.000	1.500	.594	.750	---	.500	1.500	5.000	1.000	6.250	3.250	4.879	3.734	3.000	.500	1.625	8.125	2.750	9.125
	1.750	1 1/4"-12 x 2.000	1 3/4"-12 x 2.000	1 1/2"-12 x 2.000	1 1/2"-12 x 3.000	2.374	3.267	.750						.312	1.500			.625					---	.500							3.734	3.000		1.875	8.375	3.000	9.375
	2.000	1 1/2"-12 x 2.250	2"-12 x 2.250	1 3/4"-12 x 2.250	1 3/4"-12 x 3.500	2.624	3.812	.875						.312	1.688			.625					---	.500							4.312	3.750		2.000	8.500	3.125	9.500
	2.500	1 7/8"-12 x 3.000	2 1/2"-12 x 3.000	2 1/4"-12 x 3.000	2 1/4"-12 x 4.500	3.124	3.812	1.000						.312	2.062			.625					---	.500							4.312	3.750		2.250	8.750	3.375	9.750
	3.000	2 1/4"-12 x 3.500	3"-12 x 3.500	2 3/4"-12 x 3.500	2 3/4"-12 x 5.500	3.749	4.700	1.000						.375	2.625			.625					---	.500							5.562	4.500		2.250	8.750	3.375	9.750
	3.500	2 1/2"-12 x 3.500	3 1/2"-12 x 3.500	3 1/4"-12 x 3.500	3 1/4"-12 x 6.500	4.249	5.200	1.000						.375	3.000			.625					---	.500							6.062	5.000		2.250	8.750	3.375	9.750
	4.000	3"-12 x 4.000	4"-12 x 4.000	3 3/4"-12 x 4.000	3 3/4"-12 x 7.500	4.749	---	1.000						---	3.375			.750					.500	---							---	---		2.250	8.750	3.375	9.750
BORE	MM	KM & KF	KD	KI	KA	B	BC	C	CA	CD	CM	CN	CP	CS	D	E	EE	F	G	J	K	KN	KS	KU	L	LB	MR	OD	P	R	RR	RS	TR	WB	XC	Y	ZC

1.25

FILE: 1.25_MH25S2.dwg REV: 02/09/2010

27650 Groesbeck Hwy • Roseville, MI 48066-2759 • Phone 586.775.7211 • Fax 586.775.4545 • Toll Free 800.526.7968 • e-mail: sales@peninsularcylinders.com • www.peninsularcylinders.com

CAP FIXED EYE

Heavy Duty Steel Air Cylinder

Peninsular Mounting Style: **MH 25**

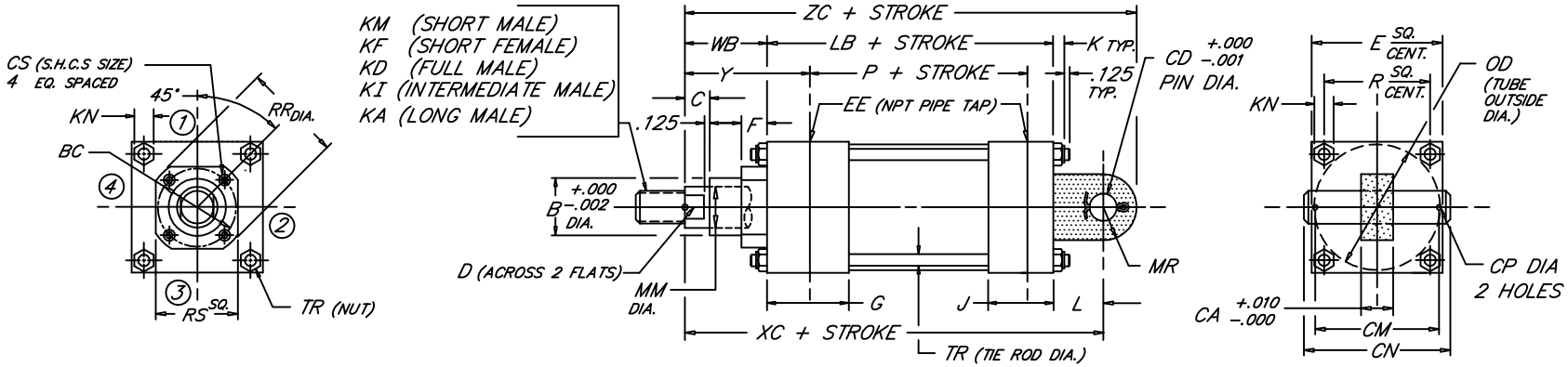

BORE	MM	ROD THREAD X LENGTH KM & KF	KD	KI	KA	B	BC	C	CA	CD	CM	CN	CP	CS	D	E	NPT EE	F	G	J	K	KN	L	LB	MR	OD	P	R	RR	RS	TR	WB	XC	Y	ZC
8.000	1.375	1"-14 x 1.625	1 3/8"-12 x 1.625	1 1/4"-12 x 1.625	1 1/4"-12 x 2.500	1.999	3.267	.625	1.485	1.000	3.219	3.594	.140	.312	1.125	8.500	3/4	.625	2.000	1.500	.750	.938	1.500	5.125	1.000	8.450	3.375	6.435	3.734	3.000	.625	1.625	8.250	2.750	9.250
	1.750	1 1/4"-12 x 2.000	1 3/4"-12 x 2.000	1 1/2"-12 x 2.000	1 1/2"-12 x 3.000	2.374	3.267	.750						.312	1.500														3.734	3.000		1.875	8.500	3.000	9.500
	2.000	1 1/2"-12 x 2.250	2"-12 x 2.250	1 3/4"-12 x 2.250	1 3/4"-12 x 3.500	2.624	3.812	.875						.312	1.688														4.312	3.750		2.000	8.625	3.125	9.625
	2.500	1 7/8"-12 x 3.000	2 1/2"-12 x 3.000	2 1/4"-12 x 3.000	2 1/4"-12 x 4.500	3.124	3.812	1.000						.312	2.062														4.312	3.750		2.250	8.875	3.375	9.875
	3.000	2 1/4"-12 x 3.500	3"-12 x 3.500	2 3/4"-12 x 3.500	2 3/4"-12 x 5.500	3.749	4.700	1.000						.375	2.625														5.562	4.500		2.250	8.875	3.375	9.875
	3.500	2 1/2"-12 x 3.500	3 1/2"-12 x 3.500	3 1/4"-12 x 3.500	3 1/4"-12 x 6.500	4.249	5.200	1.000						.375	3.000														6.062	5.000		2.250	8.875	3.375	9.875
	4.000	3"-12 x 4.000	4"-12 x 4.000	3 3/4"-12 x 4.000	3 3/4"-12 x 7.500	4.749	5.700	1.000						.375	3.375														6.562	5.500		2.250	8.875	3.375	9.875
	4.500	3 1/4"-12 x 4.500	4 1/2"-12 x 4.500	4 1/4"-12 x 4.500	4 1/4"-12 x 8.250	5.249	6.200	1.000						.375	3.875														7.062	6.000		2.250	8.875	3.375	9.875
	5.000	3 1/2"-12 x 5.000	5"-12 x 5.000	4 3/4"-12 x 5.000	4 3/4"-12 x 9.000	5.749	6.700	1.000						.375	4.250														7.562	6.500		2.250	8.875	3.375	9.875
	5.500	4"-12 x 5.500	5 1/2"-12 x 5.500	5 1/4"-12 x 5.500	5 1/4"-12 x 10.000	6.249	7.125	1.000						.375	4.625														7.938	7.000		2.250	8.875	3.375	9.875
10.000	1.750	1 1/4"-12 x 2.000	1 3/4"-12 x 2.000	1 1/2"-12 x 2.000	1 1/2"-12 x 3.000	2.374	3.812	.750	1.985	1.375	4.250	4.656	.173	.312	1.500	10.625	1	.625	2.250	2.000	.875	1.062	2.125	6.375	1.375	10.450	4.250	7.920	4.312	3.750	.750	1.875	10.375	3.062	11.750
	2.000	1 1/2"-12 x 2.250	2"-12 x 2.250	1 3/4"-12 x 2.250	1 3/4"-12 x 3.500	2.624	3.812	.875						.312	1.688														4.312	3.750		2.000	10.500	3.187	11.875
	2.500	1 7/8"-12 x 3.000	2 1/2"-12 x 3.000	2 1/4"-12 x 3.000	2 1/4"-12 x 4.500	3.124	3.812	1.000						.312	2.062														4.312	3.750		2.250	10.750	3.437	12.125
	3.000	2 1/4"-12 x 3.500	3"-12 x 3.500	2 3/4"-12 x 3.500	2 3/4"-12 x 5.500	3.749	4.700	1.000						.375	2.625														5.562	4.500		2.250	10.750	3.437	12.125
	3.500	2 1/2"-12 x 3.500	3 1/2"-12 x 3.500	3 1/4"-12 x 3.500	3 1/4"-12 x 6.500	4.249	5.200	1.000						.375	3.000														6.062	5.000		2.250	10.750	3.437	12.125
	4.000	3"-12 x 4.000	4"-12 x 4.000	3 3/4"-12 x 4.000	3 3/4"-12 x 7.500	4.749	5.700	1.000						.375	3.375														6.562	5.500		2.250	10.750	3.437	12.125
	4.500	3 1/4"-12 x 4.500	4 1/2"-12 x 4.500	4 1/4"-12 x 4.500	4 1/4"-12 x 8.250	5.249	6.200	1.000						.375	3.875														7.062	6.000		2.250	10.750	3.437	12.125
	5.000	3 1/2"-12 x 5.000	5"-12 x 5.000	4 3/4"-12 x 5.000	4 3/4"-12 x 9.000	5.749	6.700	1.000						.375	4.250														7.562	6.500		2.250	10.750	3.437	12.125
	5.500	4"-12 x 5.500	5 1/2"-12 x 5.500	5 1/4"-12 x 5.500	5 1/4"-12 x 10.000	6.249	7.125	1.000						.375	4.625														7.938	7.000		2.250	10.750	3.437	12.125
12.000	2.000	1 1/2"-12 x 2.250	2"-12 x 2.250	1 3/4"-12 x 2.250	1 3/4"-12 x 3.500	2.624	3.812	.875	2.485	1.750	5.250	5.656	.173	.312	1.688	12.750	1	.625	2.250	2.000	.875	1.062	2.250	6.875	1.750	12.450	4.750	9.405	4.312	3.750	.750	2.000	11.125	3.187	12.875
	2.500	1 7/8"-12 x 3.000	2 1/2"-12 x 3.000	2 1/4"-12 x 3.000	2 1/4"-12 x 4.500	3.124	3.812	1.000						.312	2.062														4.312	3.750		2.250	11.375	3.437	13.125
	3.000	2 1/4"-12 x 3.500	3"-12 x 3.500	2 3/4"-12 x 3.500	2 3/4"-12 x 5.500	3.749	4.700	1.000						.375	2.625														5.562	4.500		2.250	11.375	3.437	13.125
	3.500	2 1/2"-12 x 3.500	3 1/2"-12 x 3.500	3 1/4"-12 x 3.500	3 1/4"-12 x 6.500	4.249	5.200	1.000						.375	3.000														6.062	5.000		2.250	11.375	3.437	13.125
	4.000	3"-12 x 4.000	4"-12 x 4.000	3 3/4"-12 x 4.000	3 3/4"-12 x 7.500	4.749	5.700	1.000						.375	3.375														6.562	5.500		2.250	11.375	3.437	13.125
	4.500	3 1/4"-12 x 4.500	4 1/2"-12 x 4.500	4 1/4"-12 x 4.500	4 1/4"-12 x 8.250	5.249	6.200	1.000						.375	3.875														7.062	6.000		2.250	11.375	3.437	13.125
	5.000	3 1/2"-12 x 5.000	5"-12 x 5.000	4 3/4"-12 x 5.000	4 3/4"-12 x 9.000	5.749	6.700	1.000						.375	4.250														7.562	6.500		2.250	11.375	3.437	13.125
	5.500	4"-12 x 5.500	5 1/2"-12 x 5.500	5 1/4"-12 x 5.500	5 1/4"-12 x 10.000	6.249	7.125	1.000						.375	4.625														7.938	7.000		2.250	11.375	3.437	13.125
14.000	2.500	1 7/8"-12 x 3.000	2 1/2"-12 x 3.000	2 1/4"-12 x 3.000	2 1/4"-12 x 4.500	3.124	3.812		2.485	2.000	5.281	5.719	.204	.312	2.062	14.750	1 1/4	.625	2.750	2.250	1.000	1.250	2.500	8.125	2.000	14.450	5.625	10.889	4.312	3.750	.875	2.250	12.875	3.688	14.875
	3.000	2 1/4"-12 x 3.500	3"-12 x 3.500	2 3/4"-12 x 3.500	2 3/4"-12 x 5.500	3.749	4.700							.375	2.625														5.562	4.500					
	3.500	2 1/2"-12 x 3.500	3 1/2"-12 x 3.500	3 1/4"-12 x 3.500	3 1/4"-12 x 6.500	4.249	5.200							.375	3.000														6.062	5.000					
	4.000	3"-12 x 4.000	4"-12 x 4.000	3 3/4"-12 x 4.000	3 3/4"-12 x 7.500	4.749	5.700	1.000						.375	3.375														6.562	5.500					
	4.500	3 1/4"-12 x 4.500	4 1/2"-12 x 4.500	4 1/4"-12 x 4.500	4 1/4"-12 x 8.250	5.249	6.200							.375	3.875														7.062	6.000					
	5.000	3 1/2"-12 x 5.000	5"-12 x 5.000	4 3/4"-12 x 5.000	4 3/4"-12 x 9.000	5.749	6.700							.375	4.250														7.562	6.500					
	5.500	4"-12 x 5.500	5 1/2"-12 x 5.500	5 1/4"-12 x 5.500	5 1/4"-12 x 10.000	6.249	7.125							.375	4.625														7.938	7.000					
BORE	MM	KM & KF	KD	KI	KA	B	BC	C	CA	CD	CM	CN	CP	CS	D	E	EE	F	G	J	K	KN	L	LB	MR	OD	P	R	RR	RS	TR	WB	XC	Y	ZC

FILE: 1.25_MH25L2.dwg REV: 02/09/2010

27650 Groesbeck Hwy • Roseville, MI 48066-2759 • Phone 586.775.7211 • Fax 586.775.4545 • Toll Free 800.526.7968 • e-mail: sales@peninsularcylinders.com • www.peninsularcylinders.com

CAP DETACHABLE CLEVIS

Heavy Duty Steel Air Cylinder

Peninsular Mounting Style: **MH 27**

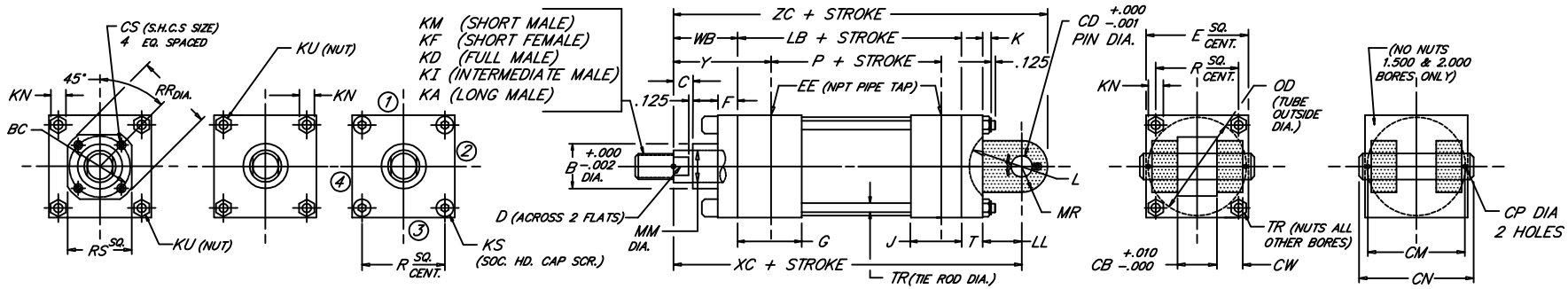

BORE	MM	KM & KF (ROD THREAD X LENGTH)	KD	KI	KA	B	BC	C	CB	CD	CM	CN	CP	CS	CW	D	E	EE (NPT)	F	G	J	K	KN	KS	KU	L	LB	LL	MR	OD	P	R	RR	RS	T	TR	WB	XC	Y	ZC
1.500	.625	7/16"-20 x .750	5/8"-18 x .750	1/2"-20 x .750	1/2"-20 x 1.125	1.124	---	.375	.765	.500	1.938	2.281	.106	---	.500	.500	2.000	3/8	.375	1.500	1.000	.312	.438	---	.250	.625	3.625	.375	.625	1.750	2.335	1.428	---	---	.375	.250	1.000	5.375	1.875	6.000
	1.000	3/4"-16 x 1.125	1"-14 x 1.125	7/8"-14 x 1.125	7/8"-14 x 1.875	1.499		.500								.875																					1.375	5.750	2.250	6.375
2.000	.625	7/16"-20 x .750	5/8"-18 x .750	1/2"-20 x .750	1/2"-20 x 1.125	1.124	---	.375	.765	.500	1.938	2.281	.106	---	.500	.500	2.500	3/8	.375	1.500	1.000	.344	.500	---	.312	.625	3.625	.375	.625	2.250	2.335	1.838	---	---	.375	.312	1.000	5.375	1.875	6.000
	1.000	3/4"-16 x 1.125	1"-14 x 1.125	7/8"-14 x 1.125	7/8"-14 x 1.875	1.499		.500								.875																					1.375	5.750	2.250	6.375
	1.375	1"-14 x 1.625	1 3/8"-12 x 1.625	1 1/4"-12 x 1.625	1 1/4"-12 x 2.500	1.999		.625								1.125																					1.625	6.000	2.500	6.625
2.500	.625	7/16"-20 x .750	5/8"-18 x .750	1/2"-20 x .750	1/2"-20 x 1.125	1.124	---	.375	.765	.500	1.938	2.281	.106	---	.500	.500	3.000	3/8	.375	1.500	1.000	.344	.500	.312	---	.625	3.750	.375	.625	2.750	2.460	2.192	---	---	.375	.312	1.000	5.500	1.875	6.125
	1.000	3/4"-16 x 1.125	1"-14 x 1.125	7/8"-14 x 1.125	7/8"-14 x 1.875	1.499		.500								.875																					1.375	5.875	2.250	6.500
	1.375	1"-14 x 1.625	1 3/8"-12 x 1.625	1 1/4"-12 x 1.625	1 1/4"-12 x 2.500	1.999		.625								1.125																					1.625	6.125	2.500	6.750
	1.750	1 1/4"-12 x 2.000	1 3/4"-12 x 2.000	1 1/2"-12 x 2.000	1 1/2"-12 x 3.000	2.374		.750								1.500																					1.875	6.375	2.750	7.000
3.250	1.000	3/4"-16 x 1.125	1"-14 x 1.125	7/8"-14 x 1.125	7/8"-14 x 1.875	1.499	---	.500	1.265	.750	2.719	3.094	.140	---	.625	.875	3.750	1/2	.625	1.750	1.250	.438	.562	.375	---	.875	4.250	.625	.875	3.500	2.750	2.758	---	---	.625	.375	1.375	6.875	2.375	7.750
	1.375	1"-14 x 1.625	1 3/8"-12 x 1.625	1 1/4"-12 x 1.625	1 1/4"-12 x 2.500	1.999		.625								1.125																					1.625	7.125	2.625	8.000
	1.750	1 1/4"-12 x 2.000	1 3/4"-12 x 2.000	1 1/2"-12 x 2.000	1 1/2"-12 x 3.000	2.374		.750								1.500																					1.875	7.375	2.875	8.250
	2.000	1 1/2"-12 x 2.250	2"-12 x 2.250	1 3/4"-12 x 2.250	1 3/4"-12 x 3.500	2.624		.875								1.688																					2.000	7.500	3.000	8.375
4.000	1.000	3/4"-16 x 1.125	1"-14 x 1.125	7/8"-14 x 1.125	7/8"-14 x 1.875	1.499	2.562	.500	1.265	.750	2.719	3.094	.140	.250	.625	.875	4.500	1/2	.625	1.750	1.250	.438	.562	---	.375	.875	4.250	.625	.875	4.250	2.750	3.323	2.969	2.500	.625	.375	1.375	6.875	2.375	7.750
	1.375	1"-14 x 1.625	1 3/8"-12 x 1.625	1 1/4"-12 x 1.625	1 1/4"-12 x 2.500	1.999	2.562	.625						.250		1.125								---	.375								2.969	2.500			1.625	7.125	2.625	8.000
	1.750	1 1/4"-12 x 2.000	1 3/4"-12 x 2.000	1 1/2"-12 x 2.000	1 1/2"-12 x 3.000	2.374	3.267	.750						.312		1.500								---	.375								3.734	3.000			1.875	7.375	2.875	8.250
	2.000	1 1/2"-12 x 2.250	2"-12 x 2.250	1 3/4"-12 x 2.250	1 3/4"-12 x 3.500	2.624	---	.875						---		1.688								.375	---								---	---			2.000	7.500	3.000	8.375
	2.500	1 7/8"-12 x 3.000	2 1/2"-12 x 3.000	2 1/4"-12 x 3.000	2 1/4"-12 x 4.500	3.124	---	1.000						---		2.062								.375	---								---	---			2.250	7.750	3.250	8.625
5.000	1.000	3/4"-16 x 1.125	1"-14 x 1.125	7/8"-14 x 1.125	7/8"-14 x 1.875	1.499	2.562	.500	1.265	.750	2.719	3.094	.140	.250	.625	.875	5.500	1/2	.625	1.750	1.250	.594	.750	---	.500	.875	4.500	.625	.875	5.250	3.000	4.101	2.969	2.500	.625	.500	1.375	7.125	2.375	8.000
	1.375	1"-14 x 1.625	1 3/8"-12 x 1.625	1 1/4"-12 x 1.625	1 1/4"-12 x 2.500	1.999	2.562	.625						.250		1.125								---	.500								2.969	2.500			1.625	7.375	2.625	8.250
	1.750	1 1/4"-12 x 2.000	1 3/4"-12 x 2.000	1 1/2"-12 x 2.000	1 1/2"-12 x 3.000	2.374	3.267	.750						.312		1.500								---	.500								3.734	3.000			1.875	7.625	2.875	8.500
	2.000	1 1/2"-12 x 2.250	2"-12 x 2.250	1 3/4"-12 x 2.250	1 3/4"-12 x 3.500	2.624	3.812	.875						.312		1.688								---	.500								4.312	3.750			2.000	7.750	3.000	8.625
	2.500	1 7/8"-12 x 3.000	2 1/2"-12 x 3.000	2 1/4"-12 x 3.000	2 1/4"-12 x 4.500	3.124	3.812	1.000						.312		2.062								---	.500								4.312	3.750			2.250	8.000	3.250	8.875
	3.000	2 1/4"-12 x 3.500	3"-12 x 3.500	2 3/4"-12 x 3.500	2 3/4"-12 x 5.500	3.749	---	1.000						---		2.625								.500	---								---	---			2.250	8.000	3.250	8.875
	3.500	2 1/2"-12 x 3.500	3 1/2"-12 x 3.500	3 1/4"-12 x 3.500	3 1/4"-12 x 6.500	4.249	---	1.000						---		3.000								.500	---								---	---			2.250	8.000	3.250	8.875
6.000	1.375	1"-14 x 1.625	1 3/8"-12 x 1.625	1 1/4"-12 x 1.625	1 1/4"-12 x 2.500	1.999	3.267	.625	1.515	1.000	3.219	3.594	.140	.312	.750	1.125	6.500	3/4	.625	2.000	1.500	.594	.750	---	.500	1.125	5.000	.750	1.250	6.250	3.250	4.879	3.734	3.000	.750	.500	1.625	8.125	2.750	9.375
	1.750	1 1/4"-12 x 2.000	1 3/4"-12 x 2.000	1 1/2"-12 x 2.000	1 1/2"-12 x 3.000	2.374	3.267	.750						.312		1.500			.625					---	.500								3.734	3.000			1.875	8.375	3.000	9.625
	2.000	1 1/2"-12 x 2.250	2"-12 x 2.250	1 3/4"-12 x 2.250	1 3/4"-12 x 3.500	2.624	3.812	.875						.312		1.688			.625					---	.500								4.312	3.750			2.000	8.500	3.125	9.750
	2.500	1 7/8"-12 x 3.000	2 1/2"-12 x 3.000	2 1/4"-12 x 3.000	2 1/4"-12 x 4.500	3.124	3.812	1.000						.312		2.062			.625					---	.500								4.312	3.750			2.250	8.750	3.375	10.000
	3.000	2 1/4"-12 x 3.500	3"-12 x 3.500	2 3/4"-12 x 3.500	2 3/4"-12 x 5.500	3.749	4.700	1.000						.375		2.625			.625					---	.500								5.562	4.500			2.250	8.750	3.375	10.000
	3.500	2 1/2"-12 x 3.500	3 1/2"-12 x 3.500	3 1/4"-12 x 3.500	3 1/4"-12 x 6.500	4.249	5.200	1.000						.375		3.000			.625					---	.500								6.062	5.000			2.250	8.750	3.375	10.000
	4.000	3"-12 x 4.000	4"-12 x 4.000	3 3/4"-12 x 4.000	3 3/4"-12 x 7.500	4.749	---	1.000						---		3.375			.750					.500	---								---	---			2.250	8.750	3.375	10.000

FILE: 1.27_MH27S2.dwg REV: 02/09/2010

27650 Groesbeck Hwy • Roseville, MI 48066-2759 • Phone 586.775.7211 • Fax 586.775.4545 • Toll Free 800.526.7968 • e-mail: sales@peninsularcylinders.com • www.peninsularcylinders.com

"PUSH" & "PULL" Force Charts - Pneumatic Cylinders

for Peninsular - Series MH - Heavy-Duty, NFPA Air Cylinders

"PUSH" - (EXTENDED CYLINDER STROKE) CYLINDER FORCES IN POUNDS

Cylinder Bore Size	Air Line Pressure (PSI)													Line Pressure
	60	65	70	75	80	85	90	95	100	105	110	115	120	←
1 1/2	106	115	124	133	141	150	159	168	177	186	194	203	212	
2	188	204	220	236	251	267	283	298	314	330	346	361	377	
2 1/2	295	319	344	368	393	417	442	466	491	515	540	565	589	
3 1/4	498	539	581	622	664	705	747	788	830	871	913	954	995	
4	754	817	880	942	1005	1068	1131	1194	1257	1319	1382	1445	1508	
5	1178	1276	1374	1473	1571	1669	1767	1865	1964	2062	2160	2258	2356	
6	1696	1838	1979	2121	2262	2403	2545	2686	2827	2969	3110	3252	3393	
8	3016	3267	3519	3770	4021	4273	4524	4775	5027	5278	5529	5781	6032	
10	4712	5105	5498	5891	6283	6676	7069	7461	7854	8247	8639	9032	9425	
12	6786	7351	7917	8482	9048	9613	10179	10744	11310	11875	12441	13006	13572	
14	9236	10006	10776	11545	12315	13085	13854	14624	15394	16164	16933	17703	18473	

Note: "Push" Forces in Pounds = (Cylinder Bore Diameter)^2 x .7854 x Line Pressure

"PULL" - (RETRACTED CYLINDER STROKE) CYLINDER FORCES IN POUNDS

Cylinder Bore Size	Cylinder Rod DIA	Air Line Pressure (PSI)													Line Pressure
		60	65	70	75	80	85	90	95	100	105	110	115	120	←
1 1/2	5/8	88	95	102	110	117	124	131	139	146	153	161	168	175	
	1	59	64	69	74	79	83	88	93	98	103	108	113	118	
2	5/8	170	184	198	213	227	241	255	269	283	298	312	326	340	
	1	141	153	165	177	188	200	212	224	236	247	259	271	283	
	1 3/8	99	108	116	124	133	141	149	157	166	174	182	191	199	
2 1/2	5/8	276	299	322	345	368	391	414	437	460	483	506	529	552	
	1	247	268	289	309	330	350	371	392	412	433	454	474	495	
	1 3/8	205	223	240	257	274	291	308	325	342	360	377	394	411	
	1 3/4	150	163	175	188	200	213	225	238	250	263	275	288	300	
3 1/4	1	451	488	526	563	601	638	676	713	751	789	826	864	901	
	1 3/8	409	443	477	511	545	579	613	647	681	715	749	783	817	
	1 3/4	353	383	412	442	471	501	530	560	589	619	648	677	707	
	2	309	335	361	387	412	438	464	490	515	541	567	593	619	
4	1	707	766	825	884	942	1001	1060	1119	1178	1237	1296	1355	1414	
	1 3/8	665	720	776	831	887	942	997	1053	1108	1164	1219	1274	1330	
	1 3/4	610	660	711	762	813	864	915	965	1016	1067	1118	1169	1219	
	2	565	613	660	707	754	801	848	895	942	990	1037	1084	1131	
	2 1/2	459	498	536	574	613	651	689	727	766	804	842	881	919	
5	1	1131	1225	1319	1414	1508	1602	1696	1791	1885	1979	2073	2168	2262	
	1 3/8	1089	1180	1271	1361	1452	1543	1634	1724	1815	1906	1997	2087	2178	
	1 3/4	1034	1120	1206	1292	1378	1465	1551	1637	1723	1809	1895	1981	2068	
	2	990	1072	1155	1237	1319	1402	1484	1567	1649	1732	1814	1897	1979	
	2 1/2	884	957	1031	1104	1178	1252	1325	1399	1473	1546	1620	1694	1767	
	3	754	817	880	942	1005	1068	1131	1194	1257	1319	1382	1445	1508	
	3 1/2	601	651	701	751	801	851	901	951	1001	1051	1102	1152	1202	

This "PULL" Chart is continued on the next page

"PUSH" & "PULL" Force Charts - Pneumatic Cylinders

for Peninsular - Series MH - Heavy-Duty, NFPA Air Cylinders

This "PULL" Chart is continued from the previous page

"PULL" - (RETRACTED CYLINDER STROKE) CYLINDER FORCES IN POUNDS

Cylinder Bore Size	Cylinder Rod DIA	Air Line Pressure (PSI)													Line Pressure
		60	65	70	75	80	85	90	95	100	105	110	115	120	←
6	1 3/8	1607	1741	1875	2009	2143	2277	2411	2545	2679	2813	2947	3081	3215	
	1 3/4	1552	1681	1811	1940	2070	2199	2328	2458	2587	2716	2846	2975	3104	
	2	1508	1634	1759	1885	2011	2136	2262	2388	2513	2639	2765	2890	3016	
	2 1/2	1402	1519	1636	1752	1869	1986	2103	2220	2337	2453	2570	2687	2804	
	3	1272	1378	1484	1590	1696	1802	1909	2015	2121	2227	2333	2439	2545	
	3 1/2	1119	1212	1306	1399	1492	1586	1679	1772	1865	1959	2052	2145	2238	
	4	942	1021	1100	1178	1257	1335	1414	1492	1571	1649	1728	1806	1885	
8	1 3/8	2927	3171	3415	3659	3902	4146	4390	4634	4878	5122	5366	5610	5854	
	1 3/4	2872	3111	3350	3590	3829	4068	4307	4547	4786	5025	5265	5504	5743	
	2	2827	3063	3299	3534	3770	4006	4241	4477	4712	4948	5184	5419	5655	
	2 1/2	2721	2948	3175	3402	3629	3855	4082	4309	4536	4762	4989	5216	5443	
	3	2592	2808	3024	3240	3456	3672	3888	4104	4320	4536	4752	4968	5184	
	3 1/2	2439	2642	2845	3048	3252	3455	3658	3861	4064	4268	4471	4674	4877	
	4	2262	2450	2639	2827	3016	3204	3393	3581	3770	3958	4147	4335	4524	
	4 1/2	2062	2233	2405	2577	2749	2921	3093	3264	3436	3608	3780	3952	4123	
	5	1838	1991	2144	2297	2450	2604	2757	2910	3063	3216	3369	3523	3676	
	5 1/2	1590	1723	1856	1988	2121	2253	2386	2518	2651	2783	2916	3048	3181	
10	1 3/4	4568	4949	5329	5710	6091	6471	6852	7233	7613	7994	8375	8755	9136	
	2	4524	4901	5278	5655	6032	6409	6786	7163	7540	7917	8294	8671	9048	
	2 1/2	4418	4786	5154	5522	5891	6259	6627	6995	7363	7731	8099	8468	8836	
	3	4288	4646	5003	5360	5718	6075	6432	6790	7147	7504	7862	8219	8577	
	3 1/2	4135	4480	4824	5169	5514	5858	6203	6547	6892	7236	7581	7926	8270	
	4	3958	4288	4618	4948	5278	5608	5938	6267	6597	6927	7257	7587	7917	
	4 1/2	3758	4071	4384	4698	5011	5324	5637	5950	6264	6577	6890	7203	7516	
	5	3534	3829	4123	4418	4712	5007	5301	5596	5891	6185	6480	6774	7069	
	5 1/2	3287	3561	3835	4109	4383	4656	4930	5204	5478	5752	6026	6300	6574	
12	2	6597	7147	7697	8247	8796	9346	9896	10446	10996	11545	12095	12645	13195	
	2 1/2	6491	7032	7573	8114	8655	9196	9737	10278	10819	11360	11901	12442	12983	
	3	6362	6892	7422	7952	8482	9012	9543	10073	10603	11133	11663	12193	12723	
	3 1/2	6209	6726	7243	7761	8278	8795	9313	9830	10348	10865	11382	11900	12417	
	4	6032	6535	7037	7540	8042	8545	9048	9550	10053	10556	11058	11561	12064	
	4 1/2	5832	6318	6804	7289	7775	8261	8747	9233	9719	10205	10691	11177	11663	
	5	5608	6075	6542	7010	7477	7944	8412	8879	9346	9814	10281	10748	11216	
	5 1/2	5360	5807	6254	6700	7147	7594	8041	8487	8934	9381	9827	10274	10721	
14	2 1/2	8942	9687	10432	11177	11922	12668	13413	14158	14903	15648	16393	17138	17884	
	3	8812	9547	10281	11015	11750	12484	13218	13953	14687	15421	16156	16890	17624	
	3 1/2	8659	9381	10102	10824	11545	12267	12989	13710	14432	15153	15875	16596	17318	
	4	8482	9189	9896	10603	11310	12017	12723	13430	14137	14844	15551	16258	16965	
	4 1/2	8282	8972	9662	10353	11043	11733	12423	13113	13803	14494	15184	15874	16564	
	5	8058	8730	9401	10073	10744	11416	12087	12759	13430	14102	14773	15445	16116	
	5 1/2	7811	8462	9113	9764	10414	11065	11716	12367	13018	13669	14320	14971	15622	

Note: "Pull" Forces in Pounds = (Cylinder Bore Diameter)^2 - (Cylinder Rod Diameter)^2 x .7854 x Line Pressure

PENINSULAR®
CYLINDER CO.

Section 2

Table of Contents

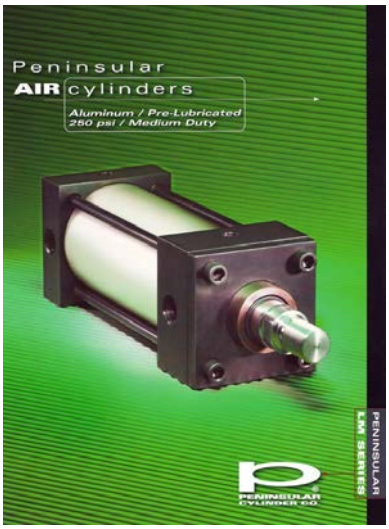

Model LM - *NFPA, Medium Duty Aluminum Cylinders*

Our Green Model LM - FAB Brochure - contains information about :

- *FEATURES, ADVANTAGES & BENEFITS of the Model LM Air Cylinder*
- *HOW TO ORDER the Model LM NFPA Air Cylinder*

Model LM - Air Cylinder Dimensional Data

Page 2.00 MH 0 No Mount Single Rod Available for Front or Rear Flush Mounts (MX0)	Page 2.08 MH 8 Head Tie Rod Extended (MX3)	Page 2.18 MH 18 Cap Square Flange (MF6)
Page 2.01 MH 1 Foot Side Lugs (MS2)	Page 2.11 MH 11 Cap Tie Rod Extended (MX2)	Page 2.19 MH 19 Head Square Block (ME3)
Page 2.02 MH 2 Head Trunnion (MT1)	Page 2.12 MH 12 Head & Cap Tie Rod Extended (MX1)	Page 2.20 MH 20 Cap Square Block (ME4)
Page 2.03 MH 3 Cap Fixed Clevis (MP1)	Page 2.13 MH 13 End Angles (MS1)	Page 2.21 MH 21 Cap Detachable Eye (MP4)
Page 2.04 MH 4 Head Rectangular Flange (MF1)	Page 2.14 MH 14 End Lugs (MS7)	Page 2.22 MH 22 Cap-Fixed Spherical Eye (MP5)
Page 2.05 MH 5 Cap Rectangular Flange (MF2)	Page 2.15 MH 15 Centerline Lugs (MS3)	Page 2.24 MH 24 Cap Detachable Clevis (MP2)
Page 2.06 MH 6 Intermediate Trunnion (MT4)	Page 2.16 MH 16 Side Tapped (MS4)	Page 2.25 MH 25 Cap Fixed Eye (MP3)
Page 2.07 MH 7 Cap Trunnion (MT2)	Page 2.17 MH 17 Head Square Flange (MF5)	Page 2.27 MH 27 Cap Detachable Clevis Equals MP1 envelope.

Pages 2.28 & 2.29 Cylinder "Push" & "Pull" Force Charts:
(use to select the correct cylinder Bore Size)

www.peninsularcylinders.com
1-800-526-7968
27650 Groesbeck Highway * Roseville, Michigan 48066-2759
(586) 775-7211 * (586) 775-4545 fax * email: sales@peninsularcylinders.com

REV. 2/9/2010

NO MOUNT

Medium Duty Aluminum Air Cylinder

Peninsular Mounting Style: **LM 0**

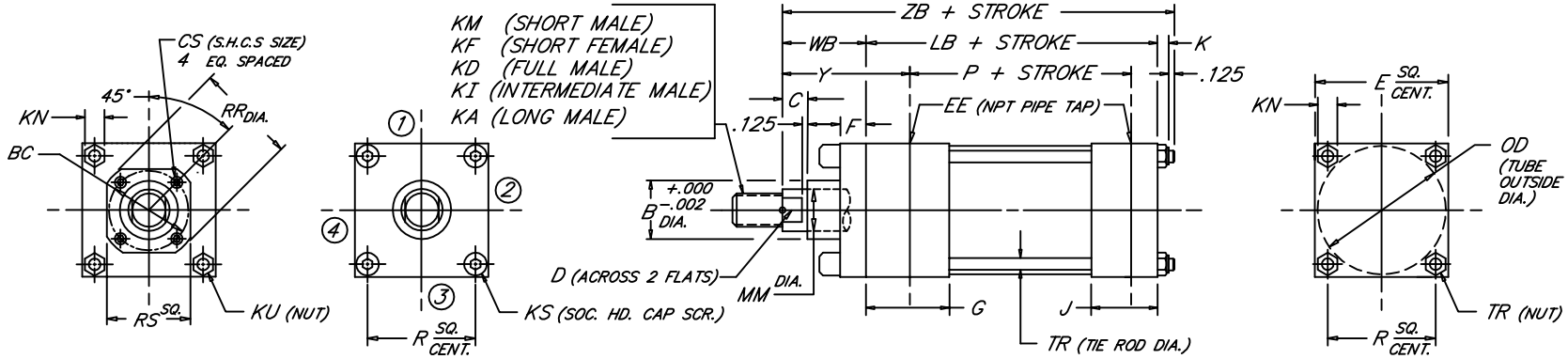

BORE	ROD MM	ROD THREAD X LENGTH KM & KF	KD	KI	KA	B	BC	C	CS	D	E	NPT EE	F	G	J	K	KN	KS	KU	LB	OD	P	R	RR	RS	TR	WB	Y	ZB
1.500	.625	7/16"-20 x .750	5/8"-18 x .750	1/2"-20 x .750	1/2"-20 x 1.125	1.124	---	.375	---	.500	2.000	3/8	.375	1.500	1.000	.312	.438	.250	---	3.625	1.750	2.335	1.428	---	---	.250	1.000	1.875	5.062
	1.000	3/4"-16 x 1.125	1"-14 x 1.125	7/8"-14 x 1.125	7/8"-14 x 1.875	1.499		.500		.875																	1.375	2.250	5.437
2.000	.625	7/16"-20 x .750	5/8"-18 x .750	1/2"-20 x .750	1/2"-20 x 1.125	1.124	---	.375	---	.500	2.500	3/8	.375	1.500	1.000	.344	.500	.312	---	3.625	2.250	2.335	1.838	---	---	.312	1.000	1.875	5.094
	1.000	3/4"-16 x 1.125	1"-14 x 1.125	7/8"-14 x 1.125	7/8"-14 x 1.875	1.499		.500		.875																	1.375	2.250	5.469
	1.375	1"-14 x 1.625	1 3/8"-12 x 1.625	1 1/4"-12 x 1.625	1 1/4"-12 x 2.500	1.999		.625		1.125																	1.625	2.500	5.719
2.500	.625	7/16"-20 x .750	5/8"-18 x .750	1/2"-20 x .750	1/2"-20 x 1.125	1.124	---	.375	---	.500	3.000	3/8	.375	1.500	1.000	.344	.500	.312	---	3.750	2.750	2.460	2.192	---	---	.312	1.000	1.875	5.219
	1.000	3/4"-16 x 1.125	1"-14 x 1.125	7/8"-14 x 1.125	7/8"-14 x 1.875	1.499		.500		.875																	1.375	2.250	5.594
	1.375	1"-14 x 1.625	1 3/8"-12 x 1.625	1 1/4"-12 x 1.625	1 1/4"-12 x 2.500	1.999		.625		1.125																	1.625	2.500	5.844
	1.750	1 1/4"-12 x 2.000	1 3/4"-12 x 2.000	1 1/2"-12 x 2.000	1 1/2"-12 x 3.000	2.374		.750		1.500																	1.875	2.750	6.094
3.250	1.000	3/4"-16 x 1.125	1"-14 x 1.125	7/8"-14 x 1.125	7/8"-14 x 1.875	1.499	---	.500	---	.875	3.750	1/2	.625	1.750	1.250	.438	.562	.375	---	4.250	3.500	2.750	2.758	---	---	.375	1.375	2.375	6.188
	1.375	1"-14 x 1.625	1 3/8"-12 x 1.625	1 1/4"-12 x 1.625	1 1/4"-12 x 2.500	1.999		.625		1.125																	1.625	2.625	6.438
	1.750	1 1/4"-12 x 2.000	1 3/4"-12 x 2.000	1 1/2"-12 x 2.000	1 1/2"-12 x 3.000	2.374		.750		1.500																	1.875	2.875	6.688
	2.000	1 1/2"-12 x 2.250	2"-12 x 2.250	1 3/4"-12 x 2.250	1 3/4"-12 x 3.500	2.624		.875		1.688																	2.000	3.000	6.813
4.000	1.000	3/4"-16 x 1.125	1"-14 x 1.125	7/8"-14 x 1.125	7/8"-14 x 1.875	1.499	2.562	.500	.250	.875	4.500	1/2	.625	1.750	1.250	.438	.562	---	.375	4.250	4.250	2.750	3.323	2.969	2.500	.375	1.375	2.375	6.188
	1.375	1"-14 x 1.625	1 3/8"-12 x 1.625	1 1/4"-12 x 1.625	1 1/4"-12 x 2.500	1.999	2.562	.625	.250	1.125								---	.375					2.969	2.500		1.625	2.625	6.438
	1.750	1 1/4"-12 x 2.000	1 3/4"-12 x 2.000	1 1/2"-12 x 2.000	1 1/2"-12 x 3.000	2.374	3.267	.750	.312	1.500								---	.375					3.734	3.000		1.875	2.875	6.688
	2.000	1 1/2"-12 x 2.250	2"-12 x 2.250	1 3/4"-12 x 2.250	1 3/4"-12 x 3.500	2.624	---	.875	---	1.688								.375	---					---	---		2.000	3.000	6.813
	2.500	1 7/8"-12 x 3.000	2 1/2"-12 x 3.000	2 1/4"-12 x 3.000	2 1/4"-12 x 4.500	3.124	---	1.000	---	2.062								.375	---					---	---		2.250	3.250	7.063
5.000	1.000	3/4"-16 x 1.125	1"-14 x 1.125	7/8"-14 x 1.125	7/8"-14 x 1.875	1.499	2.562	.500	.250	.875	5.500	1/2	.625	1.750	1.250	.594	.750	---	.500	4.500	5.250	3.000	4.101	2.969	2.500	.500	1.375	2.375	6.594
	1.375	1"-14 x 1.625	1 3/8"-12 x 1.625	1 1/4"-12 x 1.625	1 1/4"-12 x 2.500	1.999	2.562	.625	.250	1.125								---	.500					2.969	2.500		1.625	2.625	6.844
	1.750	1 1/4"-12 x 2.000	1 3/4"-12 x 2.000	1 1/2"-12 x 2.000	1 1/2"-12 x 3.000	2.374	3.267	.750	.312	1.500								---	.500					3.734	3.000		1.875	2.875	7.094
	2.000	1 1/2"-12 x 2.250	2"-12 x 2.250	1 3/4"-12 x 2.250	1 3/4"-12 x 3.500	2.624	3.812	.875	.312	1.688								---	.500					4.312	3.750		2.000	3.000	7.219
	2.500	1 7/8"-12 x 3.000	2 1/2"-12 x 3.000	2 1/4"-12 x 3.000	2 1/4"-12 x 4.500	3.124	3.812	1.000	.312	2.062								---	.500					4.312	3.750		2.250	3.250	7.469
	3.000	2 1/4"-12 x 3.500	3"-12 x 3.500	2 3/4"-12 x 3.500	2 3/4"-12 x 5.500	3.749	---	1.000	---	2.625								.500	---					---	---		2.250	3.250	7.469
	3.500	2 1/2"-12 x 3.500	3 1/2"-12 x 3.500	3 1/4"-12 x 3.500	3 1/4"-12 x 6.500	4.249	---	1.000	---	3.000								.500	---					---	---		2.250	3.250	7.469
6.000	1.375	1"-14 x 1.625	1 3/8"-12 x 1.625	1 1/4"-12 x 1.625	1 1/4"-12 x 2.500	1.999	3.267	.625	.312	1.125	6.500	3/4	.625	2.000	1.500	.594	.750	---	.500	5.000	6.250	3.250	4.879	3.734	3.000	.500	1.625	2.750	7.344
	1.750	1 1/4"-12 x 2.000	1 3/4"-12 x 2.000	1 1/2"-12 x 2.000	1 1/2"-12 x 3.000	2.374	3.267	.750	.312	1.500			.625					---	.500					3.734	3.000		1.875	3.000	7.594
	2.000	1 1/2"-12 x 2.250	2"-12 x 2.250	1 3/4"-12 x 2.250	1 3/4"-12 x 3.500	2.624	3.812	.875	.312	1.688			.625					---	.500					4.312	3.750		2.000	3.125	7.719
	2.500	1 7/8"-12 x 3.000	2 1/2"-12 x 3.000	2 1/4"-12 x 3.000	2 1/4"-12 x 4.500	3.124	3.812	1.000	.312	2.062			.625					---	.500					4.312	3.750		2.250	3.375	7.969
	3.000	2 1/4"-12 x 3.500	3"-12 x 3.500	2 3/4"-12 x 3.500	2 3/4"-12 x 5.500	3.749	4.700	1.000	.375	2.625			.625					---	.500					5.562	4.500		2.250	3.375	7.969
	3.500	2 1/2"-12 x 3.500	3 1/2"-12 x 3.500	3 1/4"-12 x 3.500	3 1/4"-12 x 6.500	4.249	5.200	1.000	.375	3.000			.625					---	.500					6.062	5.000		2.250	3.375	7.969
	4.000	3"-12 x 4.000	4"-12 x 4.000	3 3/4"-12 x 4.000	3 3/4"-12 x 7.500	4.749	---	1.000	---	3.375			.750					.500	---					---	---		2.250	3.375	7.969
BORE	MM	KM & KF	KD	KI	KA	B	BC	C	CS	D	E	EE	F	G	J	K	KN	KS	KU	LB	OD	P	R	RR	RS	TR	WB	Y	ZB

NEVA DESIGN

2.00

FILE: 2.00_LM00S2.dwg REV: 02/09/2010

27650 Groesbeck Hwy • Roseville, MI 48066-2759 • Phone 586.775.7211 • Fax 586.775.4545 • Toll Free 800.526.7968 • e-mail: sales@peninsularcylinders.com • www.peninsularcylinders.com

NO MOUNT

Medium Duty Aluminum Air Cylinder

Peninsular Mounting Style: **LM 0**

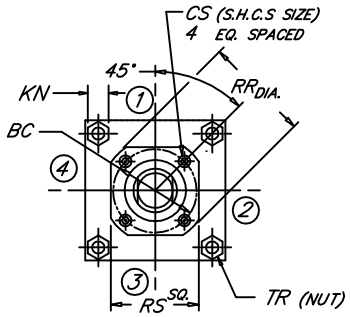

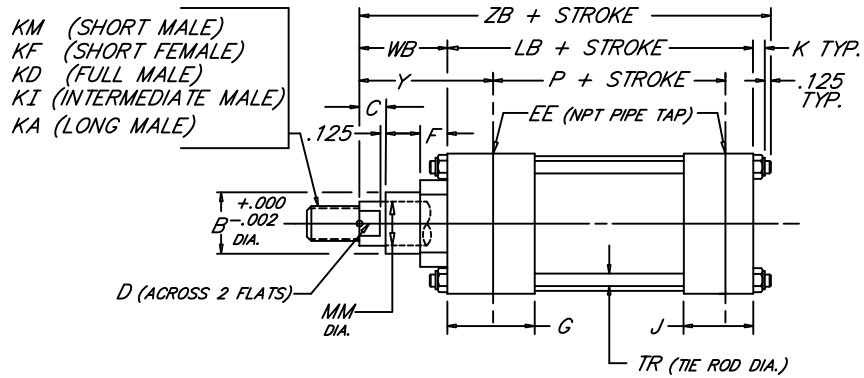

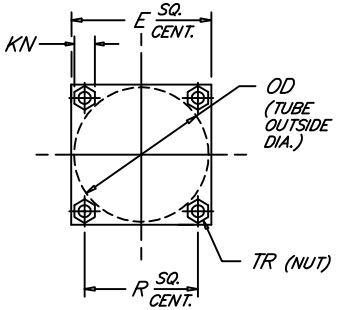

BORE	ROD MM	ROD THREAD X LENGTH KM & KF	KD	KI	KA	B	BC	C	CS	D	E	NPT EE	F	G	J	K	KN	LB	OD	P	R	RR	RS	TR	WB	Y	ZB
8.000	1.375	1"-14 x 1.625	1 3/8"-12 x 1.625	1 1/4"-12 x 1.625	1 1/4"-12 x 2.500	1.999	3.267	.625	.312	1.125	8.500	3/4	.625	2.000	1.500	.750	.938	5.125	8.450	3.375	6.435	3.734	3.000	.625	1.625	2.750	7.625
	1.750	1 1/4"-12 x 2.000	1 3/4"-12 x 2.000	1 1/2"-12 x 2.000	1 1/2"-12 x 3.000	2.374	3.267	.750	.312	1.500												3.734	3.000		1.875	3.000	7.875
	2.000	1 1/2"-12 x 2.250	2"-12 x 2.250	1 3/4"-12 x 2.250	1 3/4"-12 x 3.500	2.624	3.812	.875	.312	1.688												4.312	3.750		2.000	3.125	8.000
	2.500	1 7/8"-12 x 3.000	2 1/2"-12 x 3.000	2 1/4"-12 x 3.000	2 1/4"-12 x 4.500	3.124	3.812	1.000	.312	2.062												4.312	3.750		2.250	3.375	8.250
	3.000	2 1/4"-12 x 3.500	3"-12 x 3.500	2 3/4"-12 x 3.500	2 3/4"-12 x 5.500	3.749	4.700	1.000	.375	2.625												5.562	4.500		2.250	3.375	8.250
	3.500	2 1/2"-12 x 3.500	3 1/2"-12 x 3.500	3 1/4"-12 x 3.500	3 1/4"-12 x 6.500	4.249	5.200	1.000	.375	3.000												6.062	5.000		2.250	3.375	8.250
	4.000	3"-12 x 4.000	4"-12 x 4.000	3 3/4"-12 x 4.000	3 3/4"-12 x 7.500	4.749	5.700	1.000	.375	3.375												6.562	5.500		2.250	3.375	8.250
	4.500	3 1/4"-12 x 4.500	4 1/2"-12 x 4.500	4 1/4"-12 x 4.500	4 1/4"-12 x 8.250	5.249	6.200	1.000	.375	3.875												7.062	6.000		2.250	3.375	8.250
	5.000	3 1/2"-12 x 5.000	5"-12 x 5.000	4 3/4"-12 x 5.000	4 3/4"-12 x 9.000	5.749	6.700	1.000	.375	4.250												7.562	6.500		2.250	3.375	8.250
	5.500	4"-12 x 5.500	5 1/2"-12 x 5.500	5 1/4"-12 x 5.500	5 1/4"-12 x 10.000	6.249	7.125	1.000	.375	4.625												7.938	7.000		2.250	3.375	8.250
10.000	1.750	1 1/4"-12 x 2.000	1 3/4"-12 x 2.000	1 1/2"-12 x 2.000	1 1/2"-12 x 3.000	2.374	3.812	.750	.312	1.500	10.625	1	.625	2.250	2.000	.875	1.062	6.375	10.450	4.250	7.920	4.312	3.750	.750	1.875	3.062	9.250
	2.000	1 1/2"-12 x 2.250	2"-12 x 2.250	1 3/4"-12 x 2.250	1 3/4"-12 x 3.500	2.624	3.812	.875	.312	1.688												4.312	3.750		2.000	3.187	9.375
	2.500	1 7/8"-12 x 3.000	2 1/2"-12 x 3.000	2 1/4"-12 x 3.000	2 1/4"-12 x 4.500	3.124	3.812	1.000	.312	2.062												4.312	3.750		2.250	3.437	9.625
	3.000	2 1/4"-12 x 3.500	3"-12 x 3.500	2 3/4"-12 x 3.500	2 3/4"-12 x 5.500	3.749	4.700	1.000	.375	2.625												5.562	4.500		2.250	3.437	9.625
	3.500	2 1/2"-12 x 3.500	3 1/2"-12 x 3.500	3 1/4"-12 x 3.500	3 1/4"-12 x 6.500	4.249	5.200	1.000	.375	3.000												6.062	5.000		2.250	3.437	9.625
	4.000	3"-12 x 4.000	4"-12 x 4.000	3 3/4"-12 x 4.000	3 3/4"-12 x 7.500	4.749	5.700	1.000	.375	3.375												6.562	5.500		2.250	3.437	9.625
	4.500	3 1/4"-12 x 4.500	4 1/2"-12 x 4.500	4 1/4"-12 x 4.500	4 1/4"-12 x 8.250	5.249	6.200	1.000	.375	3.875												7.062	6.000		2.250	3.437	9.625
	5.000	3 1/2"-12 x 5.000	5"-12 x 5.000	4 3/4"-12 x 5.000	4 3/4"-12 x 9.000	5.749	6.700	1.000	.375	4.250												7.562	6.500		2.250	3.437	9.625
	5.500	4"-12 x 5.500	5 1/2"-12 x 5.500	5 1/4"-12 x 5.500	5 1/4"-12 x 10.000	6.249	7.125	1.000	.375	4.625												7.938	7.000		2.250	3.437	9.625
12.000	2.000	1 1/2"-12 x 2.250	2"-12 x 2.250	1 3/4"-12 x 2.250	1 3/4"-12 x 3.500	2.624	3.812	.875	.312	1.688	12.750	1	.625	2.250	2.000	.875	1.062	6.875	12.450	4.750	9.405	4.312	3.750	.750	2.000	3.187	9.875
	2.500	1 7/8"-12 x 3.000	2 1/2"-12 x 3.000	2 1/4"-12 x 3.000	2 1/4"-12 x 4.500	3.124	3.812	1.000	.312	2.062												4.312	3.750		2.250	3.437	10.125
	3.000	2 1/4"-12 x 3.500	3"-12 x 3.500	2 3/4"-12 x 3.500	2 3/4"-12 x 5.500	3.749	4.700	1.000	.375	2.625												5.562	4.500		2.250	3.437	10.125
	3.500	2 1/2"-12 x 3.500	3 1/2"-12 x 3.500	3 1/4"-12 x 3.500	3 1/4"-12 x 6.500	4.249	5.200	1.000	.375	3.000												6.062	5.000		2.250	3.437	10.125
	4.000	3"-12 x 4.000	4"-12 x 4.000	3 3/4"-12 x 4.000	3 3/4"-12 x 7.500	4.749	5.700	1.000	.375	3.375												6.562	5.500		2.250	3.437	10.125
	4.500	3 1/4"-12 x 4.500	4 1/2"-12 x 4.500	4 1/4"-12 x 4.500	4 1/4"-12 x 8.250	5.249	6.200	1.000	.375	3.875												7.062	6.000		2.250	3.437	10.125
	5.000	3 1/2"-12 x 5.000	5"-12 x 5.000	4 3/4"-12 x 5.000	4 3/4"-12 x 9.000	5.749	6.700	1.000	.375	4.250												7.562	6.500		2.250	3.437	10.125
	5.500	4"-12 x 5.500	5 1/2"-12 x 5.500	5 1/4"-12 x 5.500	5 1/4"-12 x 10.000	6.249	7.125	1.000	.375	4.625												7.938	7.000		2.250	3.437	10.125
14.000	2.500	1 7/8"-12 x 3.000	2 1/2"-12 x 3.000	2 1/4"-12 x 3.000	2 1/4"-12 x 4.500	3.124	3.812		.312	2.062	14.750	1 1/4	.625	2.750	2.250	1.000	1.250	8.125	14.450	5.625	10.889	4.312	3.750	.875	2.250	3.688	11.500
	3.000	2 1/4"-12 x 3.500	3"-12 x 3.500	2 3/4"-12 x 3.500	2 3/4"-12 x 5.500	3.749	4.700		.375	2.625												5.562	4.500				
	3.500	2 1/2"-12 x 3.500	3 1/2"-12 x 3.500	3 1/4"-12 x 3.500	3 1/4"-12 x 6.500	4.249	5.200		.375	3.000												6.062	5.000				
	4.000	3"-12 x 4.000	4"-12 x 4.000	3 3/4"-12 x 4.000	3 3/4"-12 x 7.500	4.749	5.700	1.000	.375	3.375												6.562	5.500				
	4.500	3 1/4"-12 x 4.500	4 1/2"-12 x 4.500	4 1/4"-12 x 4.500	4 1/4"-12 x 8.250	5.249	6.200		.375	3.875												7.062	6.000				
	5.000	3 1/2"-12 x 5.000	5"-12 x 5.000	4 3/4"-12 x 5.000	4 3/4"-12 x 9.000	5.749	6.700		.375	4.250												7.562	6.500				
	5.500	4"-12 x 5.500	5 1/2"-12 x 5.500	5 1/4"-12 x 5.500	5 1/4"-12 x 10.000	6.249	7.125		.375	4.625												7.938	7.000				
BORE	MM	KM & KF	KD	KI	KA	B	BC	C	CS	D	E	EE	F	G	J	K	KN	LB	OD	P	R	RR	RS	TR	WB	Y	ZB

NEVA DESIGN

FILE: 2.00_LM00L2.dwg REV: 02/09/2010

27650 Groesbeck Hwy • Roseville, MI 48066-2759 • Phone 586.775.7211 • Fax 586.775.4545 • Toll Free 800.526.7968 • e-mail: sales@peninsularcylinders.com • www.peninsularcylinders.com

FOOT SIDE LUGS

Medium Duty Aluminum Air Cylinder

Peninsular Mounting Style: **LM 1**

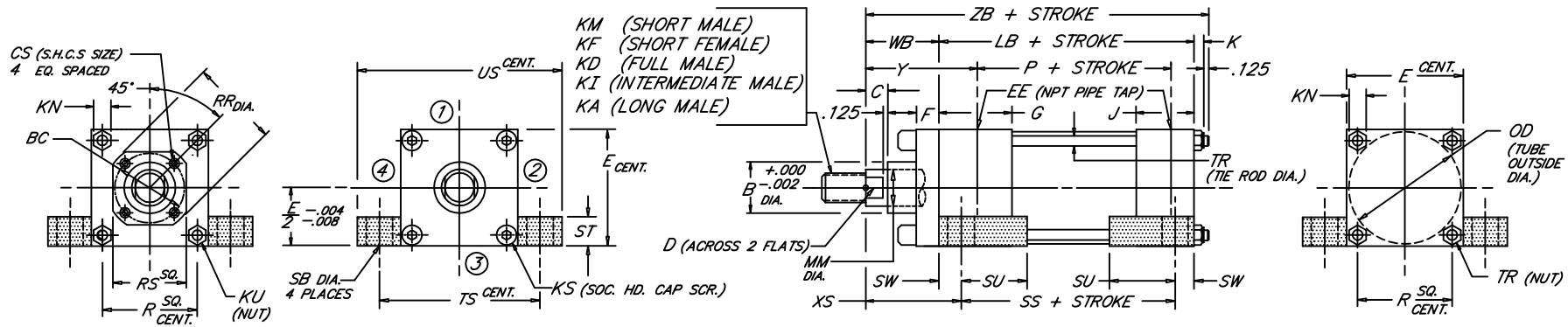

BORE	ROD MM	ROD THREAD X LENGTH KM & KF	KD	KI	KA	B	BC	C	CS	D	E	NPT EE	F	G	J	K	KN	KS	KU	LB	OD	P	R	RR	RS	SB	SS	ST	SU	SW	TR	TS	US	WB	XS	Y	ZB
1.500	.625	7/16"-20 x .750	5/8"-18 x .750	1/2"-20 x .750	1/2"-20 x 1.125	1.124	---	.375	---	.500	2.000	3/8	.375	1.500	1.000	.312	.438	.250	---	3.625	1.750	2.335	1.428	---	---	.438	2.875	.500	.938	.375	.250	2.750	3.500	1.000	1.375	1.875	5.062
	1.000	3/4"-16 x 1.125	1"-14 x 1.125	7/8"-14 x 1.125	7/8"-14 x 1.875	1.499		.500		.875																								1.375	1.750	2.250	5.437
2.000	.625	7/16"-20 x .750	5/8"-18 x .750	1/2"-20 x .750	1/2"-20 x 1.125	1.124		.375		.500																								1.000	1.375	1.875	5.094
	1.000	3/4"-16 x 1.125	1"-14 x 1.125	7/8"-14 x 1.125	7/8"-14 x 1.875	1.499	---	.500	---	.875	2.500	3/8	.375	1.500	1.000	.344	.500	.312	---	3.625	2.250	2.335	1.838	---	---	.438	2.875	.500	.938	.375	.312	3.250	4.000	1.375	1.750	2.250	5.469
	1.375	1"-14 x 1.625	1 3/8"-12 x 1.625	1 1/4"-12 x 1.625	1 1/4"-12 x 2.500	1.999		.625		1.125																								1.625	2.000	2.500	5.719
2.500	.625	7/16"-20 x .750	5/8"-18 x .750	1/2"-20 x .750	1/2"-20 x 1.125	1.124		.375		.500																								1.000	1.375	1.875	5.219
	1.000	3/4"-16 x 1.125	1"-14 x 1.125	7/8"-14 x 1.125	7/8"-14 x 1.875	1.499		.500		.875																								1.375	1.750	2.250	5.594
	1.375	1"-14 x 1.625	1 3/8"-12 x 1.625	1 1/4"-12 x 1.625	1 1/4"-12 x 2.500	1.999	---	.625	---	1.125	3.000	3/8	.375	1.500	1.000	.344	.500	.312	---	3.750	2.750	2.460	2.192	---	---	.438	3.000	.500	.938	.375	.312	3.750	4.500	1.625	2.000	2.500	5.844
	1.750	1 1/4"-12 x 2.000	1 3/4"-12 x 2.000	1 1/2"-12 x 2.000	1 1/2"-12 x 3.000	2.374		.750		1.500																								1.875	2.250	2.750	6.094
3.250	1.000	3/4"-16 x 1.125	1"-14 x 1.125	7/8"-14 x 1.125	7/8"-14 x 1.875	1.499		.500		.875																								1.375	1.875	2.375	6.188
	1.375	1"-14 x 1.625	1 3/8"-12 x 1.625	1 1/4"-12 x 1.625	1 1/4"-12 x 2.500	1.999	---	.625	---	1.125	3.750	1/2	.625	1.750	1.250	.438	.562	.375	---	4.250	3.500	2.750	2.758	---	---	.562	3.250	.750	1.250	.500	.375	4.750	5.750	1.625	2.125	2.625	6.438
	1.750	1 1/4"-12 x 2.000	1 3/4"-12 x 2.000	1 1/2"-12 x 2.000	1 1/2"-12 x 3.000	2.374		.750		1.500																								1.875	2.375	2.875	6.688
	2.000	1 1/2"-12 x 2.250	2"-12 x 2.250	1 3/4"-12 x 2.250	1 3/4"-12 x 3.500	2.624		.875		1.688																								2.000	2.500	3.000	6.813
4.000	1.000	3/4"-16 x 1.125	1"-14 x 1.125	7/8"-14 x 1.125	7/8"-14 x 1.875	1.499	2.562	.500	.250	.875								---	.375					2.969	2.500									1.375	1.875	2.375	6.188
	1.375	1"-14 x 1.625	1 3/8"-12 x 1.625	1 1/4"-12 x 1.625	1 1/4"-12 x 2.500	1.999	2.562	.625	.250	1.125								---	.375					2.969	2.500									1.625	2.125	2.625	6.438
	1.750	1 1/4"-12 x 2.000	1 3/4"-12 x 2.000	1 1/2"-12 x 2.000	1 1/2"-12 x 3.000	2.374	3.267	.750	.312	1.500	4.500	1/2	.625	1.750	1.250	.438	.562	---	.375	4.250	4.250	2.750	3.323	3.734	3.000	.562	3.250	.750	1.250	.500	.375	5.500	6.500	1.875	2.375	2.875	6.688
	2.000	1 1/2"-12 x 2.250	2"-12 x 2.250	1 3/4"-12 x 2.250	1 3/4"-12 x 3.500	2.624	---	.875	---	1.688								.375	---					---	---									2.000	2.500	3.000	6.813
	2.500	1 7/8"-12 x 3.000	2 1/2"-12 x 3.000	2 1/4"-12 x 3.000	2 1/4"-12 x 4.500	3.124	---	1.000	---	2.062								.375	---					---	---									2.250	2.750	3.250	7.063
5.000	1.000	3/4"-16 x 1.125	1"-14 x 1.125	7/8"-14 x 1.125	7/8"-14 x 1.875	1.499	2.562	.500	.250	.875								---	.500					2.969	2.500									1.375	2.062	2.375	6.594
	1.375	1"-14 x 1.625	1 3/8"-12 x 1.625	1 1/4"-12 x 1.625	1 1/4"-12 x 2.500	1.999	2.562	.625	.250	1.125								---	.500					2.969	2.500									1.625	2.312	2.625	6.844
	1.750	1 1/4"-12 x 2.000	1 3/4"-12 x 2.000	1 1/2"-12 x 2.000	1 1/2"-12 x 3.000	2.374	3.267	.750	.312	1.500								---	.500					3.734	3.000									1.875	2.562	2.875	7.094
	2.000	1 1/2"-12 x 2.250	2"-12 x 2.250	1 3/4"-12 x 2.250	1 3/4"-12 x 3.500	2.624	3.812	.875	.312	1.688	5.500	1/2	.625	1.750	1.250	.594	.750	---	.500	4.500	5.250	3.000	4.101	4.312	3.750	.812	3.125	1.000	1.562	.6875	.500	6.875	8.250	2.000	2.688	3.000	7.219
	2.500	1 7/8"-12 x 3.000	2 1/2"-12 x 3.000	2 1/4"-12 x 3.000	2 1/4"-12 x 4.500	3.124	3.812	1.000	.312	2.062								---	.500					4.312	3.750									2.250	2.938	3.250	7.469
	3.000	2 1/4"-12 x 3.500	3"-12 x 3.500	2 3/4"-12 x 3.500	2 3/4"-12 x 5.500	3.749	---	1.000	---	2.625								.500	---					---	---									2.250	2.938	3.250	7.469
	3.500	2 1/2"-12 x 3.500	3 1/2"-12 x 3.500	3 1/4"-12 x 3.500	3 1/4"-12 x 6.500	4.249	---	1.000	---	3.000								.500	---					---	---									2.250	2.938	3.250	7.469
6.000	1.375	1"-14 x 1.625	1 3/8"-12 x 1.625	1 1/4"-12 x 1.625	1 1/4"-12 x 2.500	1.999	3.267	.625	.312	1.125			.625					---	.500					3.734	3.000									1.625	2.312	2.750	7.344
	1.750	1 1/4"-12 x 2.000	1 3/4"-12 x 2.000	1 1/2"-12 x 2.000	1 1/2"-12 x 3.000	2.374	3.267	.750	.312	1.500			.625					---	.500					3.734	3.000									1.875	2.562	3.000	7.594
	2.000	1 1/2"-12 x 2.250	2"-12 x 2.250	1 3/4"-12 x 2.250	1 3/4"-12 x 3.500	2.624	3.812	.875	.312	1.688			.625					---	.500					4.312	3.750									2.000	2.688	3.125	7.719
	2.500	1 7/8"-12 x 3.000	2 1/2"-12 x 3.000	2 1/4"-12 x 3.000	2 1/4"-12 x 4.500	3.124	3.812	1.000	.312	2.062	6.500	3/4	.625	2.000	1.500	.594	.750	---	.500	5.000	6.250	3.250	4.879	4.312	3.750	.812	3.625	1.000	1.562	.6875	.500	7.875	9.250	2.250	2.938	3.375	7.969
	3.000	2 1/4"-12 x 3.500	3"-12 x 3.500	2 3/4"-12 x 3.500	2 3/4"-12 x 5.500	3.749	4.700	1.000	.375	2.625			.625					---	.500					5.562	4.500									2.250	2.938	3.375	7.969
	3.500	2 1/2"-12 x 3.500	3 1/2"-12 x 3.500	3 1/4"-12 x 3.500	3 1/4"-12 x 6.500	4.249	5.200	1.000	.375	3.000			.625					---	.500					6.062	5.000									2.250	2.938	3.375	7.969
	4.000	3"-12 x 4.000	4"-12 x 4.000	3 3/4"-12 x 4.000	3 3/4"-12 x 7.500	4.749	---	1.000	---	3.375			.750					.500	---					---	---									2.250	2.938	3.375	7.969
BORE	MM	KM & KF	KD	KI	KA	B	BC	C	CS	D	E	EE	F	G	J	K	KN	KS	KU	LB	OD	P	R	RR	RS	SB	SS	ST	SU	SW	TR	TS	US	WB	XS	Y	ZB

NEVA DESIGN

2.01

FILE: 2.01_LM01S2.dwg REV: 02/09/2010

27650 Groesbeck Hwy • Roseville, MI 48066-2759 • Phone 586.775.7211 • Fax 586.775.4545 • Toll Free 800.526.7968 • e-mail: sales@peninsularcylinders.com • www.peninsularcylinders.com

FOOT SIDE LUGS

Medium Duty Aluminum Air Cylinder

Peninsular Mounting Style: **LM 1**

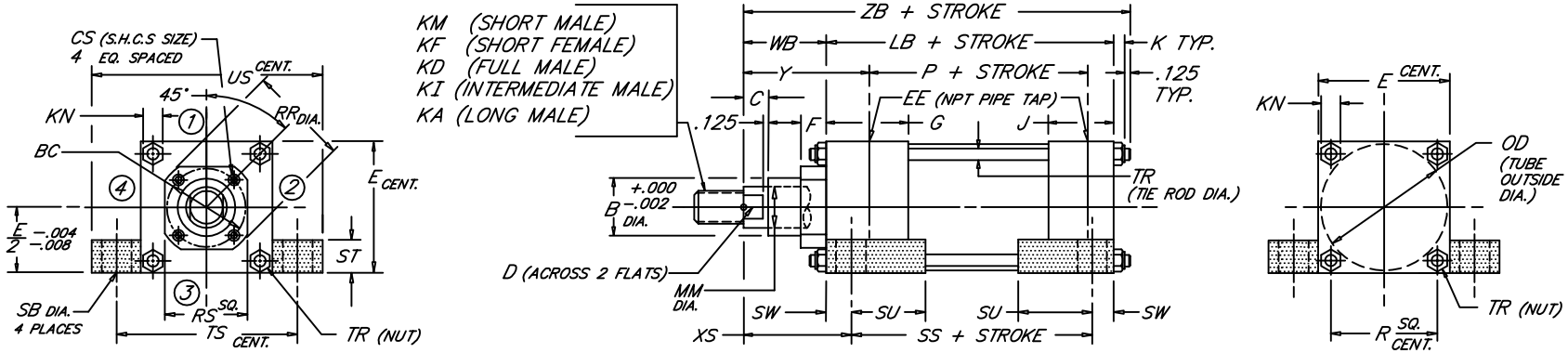

BORE	MM	KM & KF	KD	KI	KA	B	BC	C	CS	D	E	EE	F	G	J	K	KN	LB	OD	P	R	RR	RS	SB	SS	ST	SU	SW	TR	TS	US	WB	XS	Y	ZB
	ROD	ROD THREAD X LENGTH										NPT																							
8.000	1.375	1"-14 x 1.625	1 3/8"-12 x 1.625	1 1/4"-12 x 1.625	1 1/4"-12 x 2.500	1.999	3.267	.625	.312	1.125	8.500	3/4	.625	2.000	1.500	.750	.938	5.125	8.450	3.375	6.435	3.734	3.000	.812	3.750	1.000	1.562	.6875	.625	9.875	11.250	1.625	2.313	2.750	7.625
	1.750	1 1/4"-12 x 2.000	1 3/4"-12 x 2.000	1 1/2"-12 x 2.000	1 1/2"-12 x 3.000	2.374	3.267	.750	.312	1.500												3.734	3.000									1.875	2.562	3.000	7.875
	2.000	1 1/2"-12 x 2.250	2"-12 x 2.250	1 3/4"-12 x 2.250	1 3/4"-12 x 3.500	2.624	3.812	.875	.312	1.688												4.312	3.750									2.000	2.688	3.125	8.000
	2.500	1 7/8"-12 x 3.000	2 1/2"-12 x 3.000	2 1/4"-12 x 3.000	2 1/4"-12 x 4.500	3.124	3.812	1.000	.312	2.062												4.312	3.750									2.250	2.938	3.375	8.250
	3.000	2 1/4"-12 x 3.500	3"-12 x 3.500	2 3/4"-12 x 3.500	2 3/4"-12 x 5.500	3.749	4.700	1.000	.375	2.625												5.562	4.500									2.250	2.938	3.375	8.250
	3.500	2 1/2"-12 x 3.500	3 1/2"-12 x 3.500	3 1/4"-12 x 3.500	3 1/4"-12 x 6.500	4.249	5.200	1.000	.375	3.000												6.062	5.000									2.250	2.938	3.375	8.250
	4.000	3"-12 x 4.000	4"-12 x 4.000	3 3/4"-12 x 4.000	3 3/4"-12 x 7.500	4.749	5.700	1.000	.375	3.375												6.562	5.500									2.250	2.938	3.375	8.250
	4.500	3 1/4"-12 x 4.500	4 1/2"-12 x 4.500	4 1/4"-12 x 4.500	4 1/4"-12 x 8.250	5.249	6.200	1.000	.375	3.875												7.062	6.000									2.250	2.938	3.375	8.250
	5.000	3 1/2"-12 x 5.000	5"-12 x 5.000	4 3/4"-12 x 5.000	4 3/4"-12 x 9.000	5.749	6.700	1.000	.375	4.250												7.562	6.500									2.250	2.938	3.375	8.250
	5.500	4"-12 x 5.500	5 1/2"-12 x 5.500	5 1/4"-12 x 5.500	5 1/4"-12 x 10.000	6.249	7.125	1.000	.375	4.625												7.938	7.000									2.250	2.938	3.375	8.250
10.000	1.750	1 1/4"-12 x 2.000	1 3/4"-12 x 2.000	1 1/2"-12 x 2.000	1 1/2"-12 x 3.000	2.374	3.812	.750	.312	1.500	10.625	1	.625	2.250	2.000	.875	1.062	6.375	10.450	4.250	7.920	4.312	3.750	1.062	4.625	1.250	2.000	.875	.750	12.375	14.125	1.875	2.750	3.062	9.250
	2.000	1 1/2"-12 x 2.250	2"-12 x 2.250	1 3/4"-12 x 2.250	1 3/4"-12 x 3.500	2.624	3.812	.875	.312	1.688												4.312	3.750									2.000	2.875	3.187	9.375
	2.500	1 7/8"-12 x 3.000	2 1/2"-12 x 3.000	2 1/4"-12 x 3.000	2 1/4"-12 x 4.500	3.124	3.812	1.000	.312	2.062												4.312	3.750									2.250	3.125	3.437	9.625
	3.000	2 1/4"-12 x 3.500	3"-12 x 3.500	2 3/4"-12 x 3.500	2 3/4"-12 x 5.500	3.749	4.700	1.000	.375	2.625												5.562	4.500									2.250	3.125	3.437	9.625
	3.500	2 1/2"-12 x 3.500	3 1/2"-12 x 3.500	3 1/4"-12 x 3.500	3 1/4"-12 x 6.500	4.249	5.200	1.000	.375	3.000												6.062	5.000									2.250	3.125	3.437	9.625
	4.000	3"-12 x 4.000	4"-12 x 4.000	3 3/4"-12 x 4.000	3 3/4"-12 x 7.500	4.749	5.700	1.000	.375	3.375												6.562	5.500									2.250	3.125	3.437	9.625
	4.500	3 1/4"-12 x 4.500	4 1/2"-12 x 4.500	4 1/4"-12 x 4.500	4 1/4"-12 x 8.250	5.249	6.200	1.000	.375	3.875												7.062	6.000									2.250	3.125	3.437	9.625
	5.000	3 1/2"-12 x 5.000	5"-12 x 5.000	4 3/4"-12 x 5.000	4 3/4"-12 x 9.000	5.749	6.700	1.000	.375	4.250												7.562	6.500									2.250	3.125	3.437	9.625
	5.500	4"-12 x 5.500	5 1/2"-12 x 5.500	5 1/4"-12 x 5.500	5 1/4"-12 x 10.000	6.249	7.125	1.000	.375	4.625												7.938	7.000									2.250	3.125	3.437	9.625
12.000	2.000	1 1/2"-12 x 2.250	2"-12 x 2.250	1 3/4"-12 x 2.250	1 3/4"-12 x 3.500	2.624	3.812	.875	.312	1.688	12.750	1	.625	2.250	2.000	.875	1.062	6.875	12.450	4.750	9.405	4.312	3.750	1.062	5.125	1.250	2.000	.875	.750	14.500	16.250	2.000	2.875	3.187	9.875
	2.500	1 7/8"-12 x 3.000	2 1/2"-12 x 3.000	2 1/4"-12 x 3.000	2 1/4"-12 x 4.500	3.124	3.812	1.000	.312	2.062												4.312	3.750									2.250	3.125	3.437	10.125
	3.000	2 1/4"-12 x 3.500	3"-12 x 3.500	2 3/4"-12 x 3.500	2 3/4"-12 x 5.500	3.749	4.700	1.000	.375	2.625												5.562	4.500									2.250	3.125	3.437	10.125
	3.500	2 1/2"-12 x 3.500	3 1/2"-12 x 3.500	3 1/4"-12 x 3.500	3 1/4"-12 x 6.500	4.249	5.200	1.000	.375	3.000												6.062	5.000									2.250	3.125	3.437	10.125
	4.000	3"-12 x 4.000	4"-12 x 4.000	3 3/4"-12 x 4.000	3 3/4"-12 x 7.500	4.749	5.700	1.000	.375	3.375												6.562	5.500									2.250	3.125	3.437	10.125
	4.500	3 1/4"-12 x 4.500	4 1/2"-12 x 4.500	4 1/4"-12 x 4.500	4 1/4"-12 x 8.250	5.249	6.200	1.000	.375	3.875												7.062	6.000									2.250	3.125	3.437	10.125
	5.000	3 1/2"-12 x 5.000	5"-12 x 5.000	4 3/4"-12 x 5.000	4 3/4"-12 x 9.000	5.749	6.700	1.000	.375	4.250												7.562	6.500									2.250	3.125	3.437	10.125
	5.500	4"-12 x 5.500	5 1/2"-12 x 5.500	5 1/4"-12 x 5.500	5 1/4"-12 x 10.000	6.249	7.125	1.000	.375	4.625												7.938	7.000									2.250	3.125	3.437	10.125
14.000	2.500	1 7/8"-12 x 3.000	2 1/2"-12 x 3.000	2 1/4"-12 x 3.000	2 1/4"-12 x 4.500	3.124	3.812		.312	2.062	14.750	1 1/4	.625	2.750	2.250	1.000	1.250	8.125	14.450	5.625	10.889	4.312	3.750	1.312	5.875	1.500	2.500	1.125	.875	17.000	19.250	2.250	3.375	3.688	11.500
	3.000	2 1/4"-12 x 3.500	3"-12 x 3.500	2 3/4"-12 x 3.500	2 3/4"-12 x 5.500	3.749	4.700		.375	2.625												5.562	4.500												
	3.500	2 1/2"-12 x 3.500	3 1/2"-12 x 3.500	3 1/4"-12 x 3.500	3 1/4"-12 x 6.500	4.249	5.200		.375	3.000												6.062	5.000												
	4.000	3"-12 x 4.000	4"-12 x 4.000	3 3/4"-12 x 4.000	3 3/4"-12 x 7.500	4.749	5.700	1.000	.375	3.375												6.562	5.500												
	4.500	3 1/4"-12 x 4.500	4 1/2"-12 x 4.500	4 1/4"-12 x 4.500	4 1/4"-12 x 8.250	5.249	6.200		.375	3.875												7.062	6.000												
	5.000	3 1/2"-12 x 5.000	5"-12 x 5.000	4 3/4"-12 x 5.000	4 3/4"-12 x 9.000	5.749	6.700		.375	4.250												7.562	6.500												
	5.500	4"-12 x 5.500	5 1/2"-12 x 5.500	5 1/4"-12 x 5.500	5 1/4"-12 x 10.000	6.249	7.125		.375	4.625												7.938	7.000												
BORE	MM	KM & KF	KD	KI	KA	B	BC	C	CS	D	E	EE	F	G	J	K	KN	LB	OD	P	R	RR	RS	SB	SS	ST	SU	SW	TR	TS	US	WB	XS	Y	ZB

NEVA DESIGN

FILE: 2.01_LM01L2.dwg REV: 02/09/2010

27650 Groesbeck Hwy • Roseville, MI 48066-2759 • Phone 586.775.7211 • Fax 586.775.4545 • Toll Free 800.526.7968 • e-mail: sales@peninsularcylinders.com • www.peninsularcylinders.com

HEAD TRUNNION

Medium Duty Aluminum Air Cylinder

Peninsular Mounting Style: **LM 2**

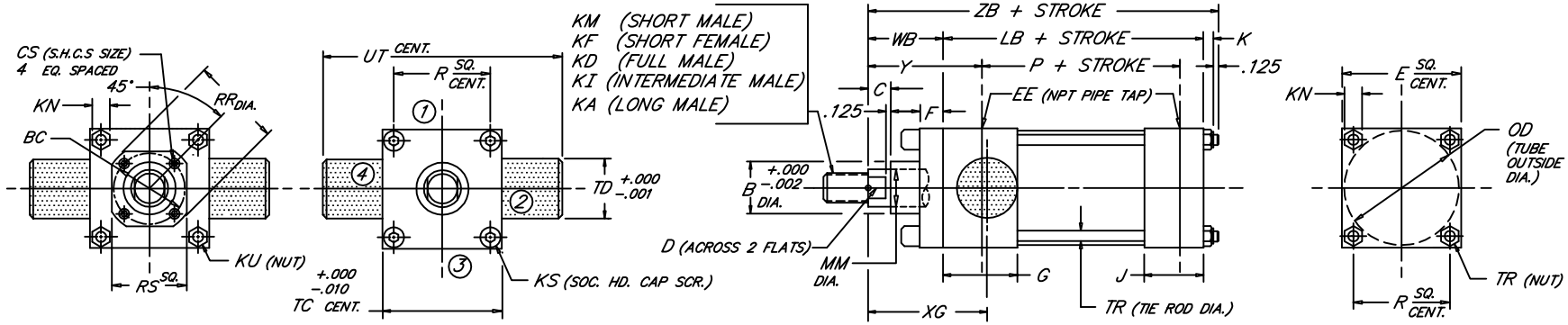

BORE	MM	KM & KF	KD	KI	KA	B	BC	C	CS	D	E	EE	F	G	J	K	KN	KS	KU	LB	OD	P	R	RR	RS	TC	TD	TR	UT	WB	XG	Y	ZB
	ROD	ROD THREAD X LENGTH										NPT																					
1.500	.625	7/16"-20 x .750	5/8"-18 x .750	1/2"-20 x .750	1/2"-20 x 1.125	1.124	---	.375	---	.500	2.000	3/8	.375	1.500	1.000	.312	.438	.250	---	3.625	1.750	2.335	1.428	---	---	2.000	1.000	.250	4.000	1.000	1.750	1.875	5.062
	1.000	3/4"-16 x 1.125	1"-14 x 1.125	7/8"-14 x 1.125	7/8"-14 x 1.875	1.499		.500		.875																					1.375	2.125	2.250	5.437
2.000	.625	7/16"-20 x .750	5/8"-18 x .750	1/2"-20 x .750	1/2"-20 x 1.125	1.124	---	.375	---	.500	2.500	3/8	.375	1.500	1.000	.344	.500	.312	---	3.625	2.250	2.335	1.838	---	---	2.500	1.000	.312	4.500	1.000	1.750	1.875	5.094
	1.000	3/4"-16 x 1.125	1"-14 x 1.125	7/8"-14 x 1.125	7/8"-14 x 1.875	1.499		.500		.875																					1.375	2.125	2.250	5.469
	1.375	1"-14 x 1.625	1 3/8"-12 x 1.625	1 1/4"-12 x 1.625	1 1/4"-12 x 2.500	1.999		.625		1.125																					1.625	2.375	2.500	5.719
2.500	.625	7/16"-20 x .750	5/8"-18 x .750	1/2"-20 x .750	1/2"-20 x 1.125	1.124	---	.375	---	.500	3.000	3/8	.375	1.500	1.000	.344	.500	.312	---	3.750	2.750	2.460	2.192	---	---	3.000	1.000	.312	5.000	1.000	1.750	1.875	5.219
	1.000	3/4"-16 x 1.125	1"-14 x 1.125	7/8"-14 x 1.125	7/8"-14 x 1.875	1.499		.500		.875																					1.375	2.125	2.250	5.594
	1.375	1"-14 x 1.625	1 3/8"-12 x 1.625	1 1/4"-12 x 1.625	1 1/4"-12 x 2.500	1.999		.625		1.125																					1.625	2.375	2.500	5.844
	1.750	1 1/4"-12 x 2.000	1 3/4"-12 x 2.000	1 1/2"-12 x 2.000	1 1/2"-12 x 3.000	2.374		.750		1.500																					1.875	2.625	2.750	6.094
3.250	1.000	3/4"-16 x 1.125	1"-14 x 1.125	7/8"-14 x 1.125	7/8"-14 x 1.875	1.499	---	.500	---	.875	3.750	1/2	.625	1.750	1.250	.438	.562	.375	---	4.250	3.500	2.750	2.758	---	---	3.750	1.000	.375	5.750	1.375	2.250	2.375	6.188
	1.375	1"-14 x 1.625	1 3/8"-12 x 1.625	1 1/4"-12 x 1.625	1 1/4"-12 x 2.500	1.999		.625		1.125																					1.625	2.500	2.625	6.438
	1.750	1 1/4"-12 x 2.000	1 3/4"-12 x 2.000	1 1/2"-12 x 2.000	1 1/2"-12 x 3.000	2.374		.750		1.500																					1.875	2.750	2.875	6.688
	2.000	1 1/2"-12 x 2.250	2"-12 x 2.250	1 3/4"-12 x 2.250	1 3/4"-12 x 3.500	2.624		.875		1.688																					2.000	2.875	3.000	6.813
4.000	1.000	3/4"-16 x 1.125	1"-14 x 1.125	7/8"-14 x 1.125	7/8"-14 x 1.875	1.499	2.562	.500	.250	.875	4.500	1/2	.625	1.750	1.250	.438	.562	---	.375	4.250	4.250	2.750	3.323	2.969	2.500	4.500	1.000	.375	6.500	1.375	2.250	2.375	6.188
	1.375	1"-14 x 1.625	1 3/8"-12 x 1.625	1 1/4"-12 x 1.625	1 1/4"-12 x 2.500	1.999	2.562	.625	.250	1.125								---	.375					2.969	2.500					1.625	2.500	2.625	6.438
	1.750	1 1/4"-12 x 2.000	1 3/4"-12 x 2.000	1 1/2"-12 x 2.000	1 1/2"-12 x 3.000	2.374	3.267	.750	.312	1.500								---	.375					3.734	3.000					1.875	2.750	2.875	6.688
	2.000	1 1/2"-12 x 2.250	2"-12 x 2.250	1 3/4"-12 x 2.250	1 3/4"-12 x 3.500	2.624	---	.875	---	1.688								.375	---					---	---					2.000	2.875	3.000	6.813
	2.500	1 7/8"-12 x 3.000	2 1/2"-12 x 3.000	2 1/4"-12 x 3.000	2 1/4"-12 x 4.500	3.124	---	1.000	---	2.062								.375	---					---	---					2.250	3.125	3.250	7.063
5.000	1.000	3/4"-16 x 1.125	1"-14 x 1.125	7/8"-14 x 1.125	7/8"-14 x 1.875	1.499	2.562	.500	.250	.875	5.500	1/2	.625	1.750	1.250	.594	.750	---	.500	4.500	5.250	3.000	4.101	2.969	2.500	5.500	1.000	.500	7.500	1.375	2.250	2.375	6.594
	1.375	1"-14 x 1.625	1 3/8"-12 x 1.625	1 1/4"-12 x 1.625	1 1/4"-12 x 2.500	1.999	2.562	.625	.250	1.125								---	.500					2.969	2.500					1.625	2.500	2.625	6.844
	1.750	1 1/4"-12 x 2.000	1 3/4"-12 x 2.000	1 1/2"-12 x 2.000	1 1/2"-12 x 3.000	2.374	3.267	.750	.312	1.500								---	.500					3.734	3.000					1.875	2.750	2.875	7.094
	2.000	1 1/2"-12 x 2.250	2"-12 x 2.250	1 3/4"-12 x 2.250	1 3/4"-12 x 3.500	2.624	3.812	.875	.312	1.688								---	.500					4.312	3.750					2.000	2.875	3.000	7.219
	2.500	1 7/8"-12 x 3.000	2 1/2"-12 x 3.000	2 1/4"-12 x 3.000	2 1/4"-12 x 4.500	3.124	3.812	1.000	.312	2.062								---	.500					4.312	3.750					2.250	3.125	3.250	7.469
	3.000	2 1/4"-12 x 3.500	3"-12 x 3.500	2 3/4"-12 x 3.500	2 3/4"-12 x 5.500	3.749	---	1.000	---	2.625								.500	---					---	---					2.250	3.125	3.250	7.469
	3.500	2 1/2"-12 x 3.500	3 1/2"-12 x 3.500	3 1/4"-12 x 3.500	3 1/4"-12 x 6.500	4.249	---	1.000	---	3.000								.500	---					---	---					2.250	3.125	3.250	7.469
6.000	1.375	1"-14 x 1.625	1 3/8"-12 x 1.625	1 1/4"-12 x 1.625	1 1/4"-12 x 2.500	1.999	3.267	.625	.312	1.125	6.500	3/4	.625	2.000	1.500	.594	.750	---	.500	5.000	6.250	3.250	4.879	3.734	3.000	6.500	1.375	.500	9.250	1.625	2.625	2.750	7.344
	1.750	1 1/4"-12 x 2.000	1 3/4"-12 x 2.000	1 1/2"-12 x 2.000	1 1/2"-12 x 3.000	2.374	3.267	.750	.312	1.500			.625					---	.500					3.734	3.000					1.875	2.875	3.000	7.594
	2.000	1 1/2"-12 x 2.250	2"-12 x 2.250	1 3/4"-12 x 2.250	1 3/4"-12 x 3.500	2.624	3.812	.875	.312	1.688			.625					---	.500					4.312	3.750					2.000	3.000	3.125	7.719
	2.500	1 7/8"-12 x 3.000	2 1/2"-12 x 3.000	2 1/4"-12 x 3.000	2 1/4"-12 x 4.500	3.124	3.812	1.000	.312	2.062			.625					---	.500					4.312	3.750					2.250	3.250	3.375	7.969
	3.000	2 1/4"-12 x 3.500	3"-12 x 3.500	2 3/4"-12 x 3.500	2 3/4"-12 x 5.500	3.749	4.700	1.000	.375	2.625			.625					---	.500					5.562	4.500					2.250	3.250	3.375	7.969
	3.500	2 1/2"-12 x 3.500	3 1/2"-12 x 3.500	3 1/4"-12 x 3.500	3 1/4"-12 x 6.500	4.249	5.200	1.000	.375	3.000			.625					---	.500					6.062	5.000					2.250	3.250	3.375	7.969
	4.000	3"-12 x 4.000	4"-12 x 4.000	3 3/4"-12 x 4.000	3 3/4"-12 x 7.500	4.749	---	1.000	---	3.375			.750					.500	---					---	---					2.250	3.250	3.375	7.969
BORE	MM	KM & KF	KD	KI	KA	B	BC	C	CS	D	E	EE	F	G	J	K	KN	KS	KU	LB	OD	P	R	RR	RS	TC	TD	TR	UT	WB	XG	Y	ZB

NEVA DESIGN

2.02

FILE: 2.02_LM02S2.dwg REV: 02/09/2010

27650 Groesbeck Hwy • Roseville, MI 48066-2759 • Phone 586.775.7211 • Fax 586.775.4545 • Toll Free 800.526.7968 • e-mail: sales@peninsularcylinders.com • www.peninsularcylinders.com

HEAD TRUNNION

Medium Duty Aluminum Air Cylinder

Peninsular Mounting Style: **LM 2**

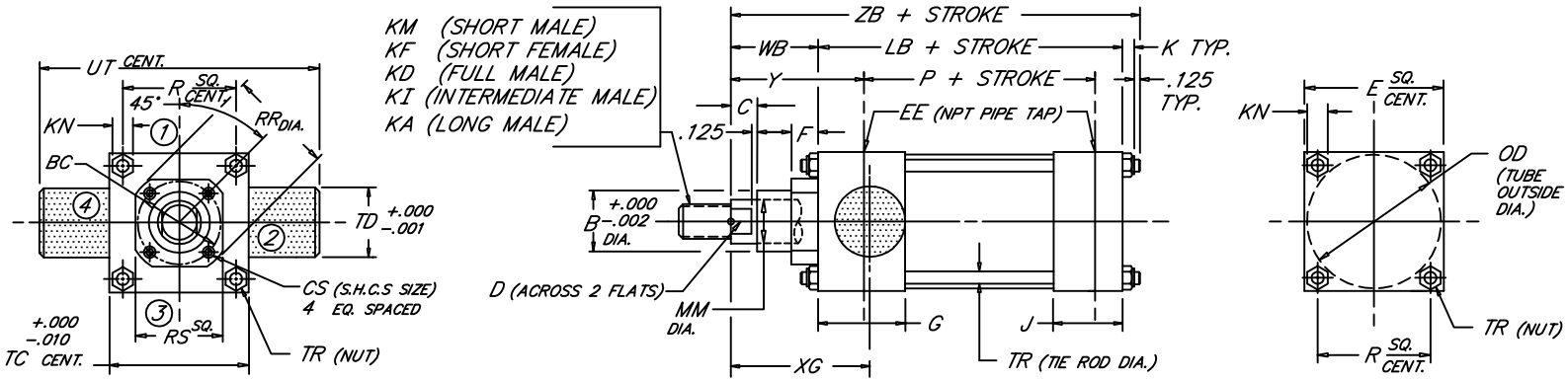

BORE	ROD MM	ROD THREAD X LENGTH KM & KF	KD	KI	KA	B	BC	C	CS	D	E	NPT EE	F	G	J	K	KN	LB	OD	P	R	RR	RS	TC	TD	TR	UT	WB	XG	Y	ZB
8.000	1.375	1"-14 x 1.625	1 3/8"-12 x 1.625	1 1/4"-12 x 1.625	1 1/4"-12 x 2.500	1.999	3.267	.625	.312	1.125	8.500	3/4	.625	2.000	1.500	.750	.938	5.125	8.450	3.375	6.435	3.734	3.000	8.500	1.375	.625	11.250	1.625	2.625	2.750	7.625
	1.750	1 1/4"-12 x 2.000	1 3/4"-12 x 2.000	1 1/2"-12 x 2.000	1 1/2"-12 x 3.000	2.374	3.267	.750	.312	1.500												3.734	3.000					1.875	2.875	3.000	7.875
	2.000	1 1/2"-12 x 2.250	2"-12 x 2.250	1 3/4"-12 x 2.250	1 3/4"-12 x 3.500	2.624	3.812	.875	.312	1.688												4.312	3.750					2.000	3.000	3.125	8.000
	2.500	1 7/8"-12 x 3.000	2 1/2"-12 x 3.000	2 1/4"-12 x 3.000	2 1/4"-12 x 4.500	3.124	3.812	1.000	.312	2.062												4.312	3.750					2.250	3.250	3.375	8.250
	3.000	2 1/4"-12 x 3.500	3"-12 x 3.500	2 3/4"-12 x 3.500	2 3/4"-12 x 5.500	3.749	4.700	1.000	.375	2.625												5.562	4.500					2.250	3.250	3.375	8.250
	3.500	2 1/2"-12 x 3.500	3 1/2"-12 x 3.500	3 1/4"-12 x 3.500	3 1/4"-12 x 6.500	4.249	5.200	1.000	.375	3.000												6.062	5.000					2.250	3.250	3.375	8.250
	4.000	3"-12 x 4.000	4"-12 x 4.000	3 3/4"-12 x 4.000	3 3/4"-12 x 7.500	4.749	5.700	1.000	.375	3.375												6.562	5.500					2.250	3.250	3.375	8.250
	4.500	3 1/4"-12 x 4.500	4 1/2"-12 x 4.500	4 1/4"-12 x 4.500	4 1/4"-12 x 8.250	5.249	6.200	1.000	.375	3.875												7.062	6.000					2.250	3.250	3.375	8.250
	5.000	3 1/2"-12 x 5.000	5"-12 x 5.000	4 3/4"-12 x 5.000	4 3/4"-12 x 9.000	5.749	6.700	1.000	.375	4.250												7.562	6.500					2.250	3.250	3.375	8.250
	5.500	4"-12 x 5.500	5 1/2"-12 x 5.500	5 1/4"-12 x 5.500	5 1/4"-12 x 10.000	6.249	7.125	1.000	.375	4.625												7.938	7.000					2.250	3.250	3.375	8.250
10.000	1.750	1 1/4"-12 x 2.000	1 3/4"-12 x 2.000	1 1/2"-12 x 2.000	1 1/2"-12 x 3.000	2.374	3.812	.750	.312	1.500	10.625	1	.625	2.250	2.000	.875	1.062	6.375	10.450	4.250	7.920	4.312	3.750	10.625	1.750	.750	14.125	1.875	3.000	3.062	9.250
	2.000	1 1/2"-12 x 2.250	2"-12 x 2.250	1 3/4"-12 x 2.250	1 3/4"-12 x 3.500	2.624	3.812	.875	.312	1.688												4.312	3.750					2.000	3.125	3.187	9.375
	2.500	1 7/8"-12 x 3.000	2 1/2"-12 x 3.000	2 1/4"-12 x 3.000	2 1/4"-12 x 4.500	3.124	3.812	1.000	.312	2.062												4.312	3.750					2.250	3.375	3.437	9.625
	3.000	2 1/4"-12 x 3.500	3"-12 x 3.500	2 3/4"-12 x 3.500	2 3/4"-12 x 5.500	3.749	4.700	1.000	.375	2.625												5.562	4.500					2.250	3.375	3.437	9.625
	3.500	2 1/2"-12 x 3.500	3 1/2"-12 x 3.500	3 1/4"-12 x 3.500	3 1/4"-12 x 6.500	4.249	5.200	1.000	.375	3.000												6.062	5.000					2.250	3.375	3.437	9.625
	4.000	3"-12 x 4.000	4"-12 x 4.000	3 3/4"-12 x 4.000	3 3/4"-12 x 7.500	4.749	5.700	1.000	.375	3.375												6.562	5.500					2.250	3.375	3.437	9.625
	4.500	3 1/4"-12 x 4.500	4 1/2"-12 x 4.500	4 1/4"-12 x 4.500	4 1/4"-12 x 8.250	5.249	6.200	1.000	.375	3.875												7.062	6.000					2.250	3.375	3.437	9.625
	5.000	3 1/2"-12 x 5.000	5"-12 x 5.000	4 3/4"-12 x 5.000	4 3/4"-12 x 9.000	5.749	6.700	1.000	.375	4.250												7.562	6.500					2.250	3.375	3.437	9.625
	5.500	4"-12 x 5.500	5 1/2"-12 x 5.500	5 1/4"-12 x 5.500	5 1/4"-12 x 10.000	6.249	7.125	1.000	.375	4.625												7.938	7.000					2.250	3.375	3.437	9.625
12.000	2.000	1 1/2"-12 x 2.250	2"-12 x 2.250	1 3/4"-12 x 2.250	1 3/4"-12 x 3.500	2.624	3.812	.875	.312	1.688	12.750	1	.625	2.250	2.000	.875	1.062	6.875	12.450	4.750	9.405	4.312	3.750	12.750	1.750	.750	16.250	2.000	3.125	3.187	9.875
	2.500	1 7/8"-12 x 3.000	2 1/2"-12 x 3.000	2 1/4"-12 x 3.000	2 1/4"-12 x 4.500	3.124	3.812	1.000	.312	2.062												4.312	3.750					2.250	3.375	3.437	10.125
	3.000	2 1/4"-12 x 3.500	3"-12 x 3.500	2 3/4"-12 x 3.500	2 3/4"-12 x 5.500	3.749	4.700	1.000	.375	2.625												5.562	4.500					2.250	3.375	3.437	10.125
	3.500	2 1/2"-12 x 3.500	3 1/2"-12 x 3.500	3 1/4"-12 x 3.500	3 1/4"-12 x 6.500	4.249	5.200	1.000	.375	3.000												6.062	5.000					2.250	3.375	3.437	10.125
	4.000	3"-12 x 4.000	4"-12 x 4.000	3 3/4"-12 x 4.000	3 3/4"-12 x 7.500	4.749	5.700	1.000	.375	3.375												6.562	5.500					2.250	3.375	3.437	10.125
	4.500	3 1/4"-12 x 4.500	4 1/2"-12 x 4.500	4 1/4"-12 x 4.500	4 1/4"-12 x 8.250	5.249	6.200	1.000	.375	3.875												7.062	6.000					2.250	3.375	3.437	10.125
	5.000	3 1/2"-12 x 5.000	5"-12 x 5.000	4 3/4"-12 x 5.000	4 3/4"-12 x 9.000	5.749	6.700	1.000	.375	4.250												7.562	6.500					2.250	3.375	3.437	10.125
	5.500	4"-12 x 5.500	5 1/2"-12 x 5.500	5 1/4"-12 x 5.500	5 1/4"-12 x 10.000	6.249	7.125	1.000	.375	4.625												7.938	7.000					2.250	3.375	3.437	10.125
14.000	2.500	1 7/8"-12 x 3.000	2 1/2"-12 x 3.000	2 1/4"-12 x 3.000	2 1/4"-12 x 4.500	3.124	3.812		.312	2.062												4.312	3.750								
	3.000	2 1/4"-12 x 3.500	3"-12 x 3.500	2 3/4"-12 x 3.500	2 3/4"-12 x 5.500	3.749	4.700		.375	2.625												5.562	4.500								
	3.500	2 1/2"-12 x 3.500	3 1/2"-12 x 3.500	3 1/4"-12 x 3.500	3 1/4"-12 x 6.500	4.249	5.200		.375	3.000												6.062	5.000								
	4.000	3"-12 x 4.000	4"-12 x 4.000	3 3/4"-12 x 4.000	3 3/4"-12 x 7.500	4.749	5.700	1.000	.375	3.375	14.750	1 1/4	.625	2.750	2.250	1.000	1.250	8.125	14.450	5.625	10.889	6.562	5.500	14.750	2.000	.875	18.750	2.250	3.625	3.688	11.500
	4.500	3 1/4"-12 x 4.500	4 1/2"-12 x 4.500	4 1/4"-12 x 4.500	4 1/4"-12 x 8.250	5.249	6.200		.375	3.875												7.062	6.000								
	5.000	3 1/2"-12 x 5.000	5"-12 x 5.000	4 3/4"-12 x 5.000	4 3/4"-12 x 9.000	5.749	6.700		.375	4.250												7.562	6.500								
	5.500	4"-12 x 5.500	5 1/2"-12 x 5.500	5 1/4"-12 x 5.500	5 1/4"-12 x 10.000	6.249	7.125		.375	4.625												7.938	7.000								
BORE	MM	KM & KF	KD	KI	KA	B	BC	C	CS	D	E	EE	F	G	J	K	KN	LB	OD	P	R	RR	RS	TC	TD	TR	UT	WB	XG	Y	ZB

NEVA DESIGN

FILE: 2.02_LM02L2.dwg REV: 02/09/2010

27650 Groesbeck Hwy • Roseville, MI 48066-2759 • Phone 586.775.7211 • Fax 586.775.4545 • Toll Free 800.526.7968 • e-mail: sales@peninsularcylinders.com • www.peninsularcylinders.com

CAP FIXED CLEVIS

Medium Duty Aluminum Air Cylinder

Peninsular Mounting Style: **LM 3**

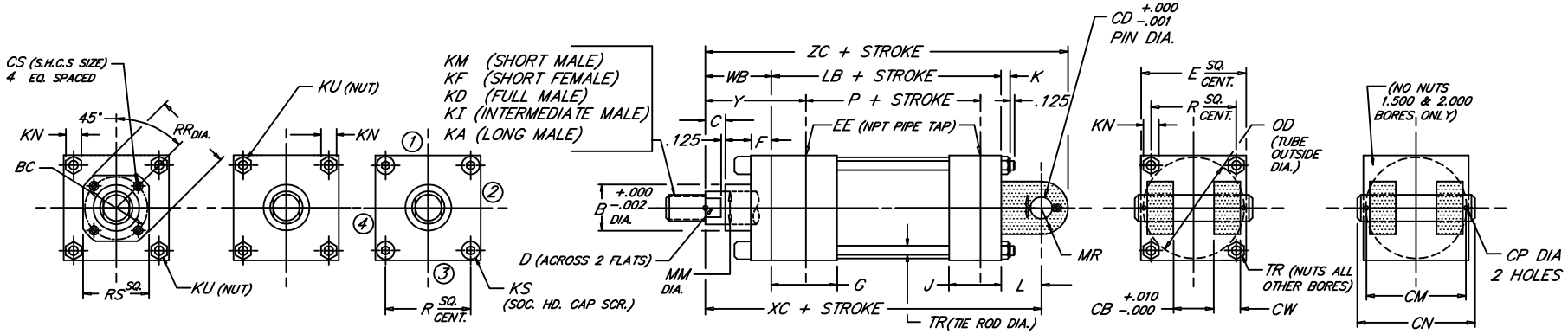

BORE	ROD MM	ROD THREAD X LENGTH KM & KF	KD	KI	KA	B	BC	C	CB	CD	CM	CN	CP	CS	CW	D	E	NPT EE	F	G	J	K	KN	KS	KU	L	LB	MR	OD	P	R	RR	RS	TR	WB	XC	Y	ZC
1.500	.625	7/16"-20 x .750	5/8"-18 x .750	1/2"-20 x .750	1/2"-20 x 1.125	1.124	---	.375	.765	.500	1.938	2.281	.106	---	.500	.500	2.000	3/8	.375	1.500	1.000	.312	.438	---	.250	.750	3.625	.500	1.750	2.335	1.428	---	---	.250	1.000	5.375	1.875	5.875
	1.000	3/4"-16 x 1.125	1"-14 x 1.125	7/8"-14 x 1.125	7/8"-14 x 1.875	1.499		.500								.875																			1.375	5.750	2.250	6.250
2.000	.625	7/16"-20 x .750	5/8"-18 x .750	1/2"-20 x .750	1/2"-20 x 1.125	1.124	---	.375	.765	.500	1.938	2.281	.106	---	.500	.500	2.500	3/8	.375	1.500	1.000	.344	.500	---	.312	.750	3.625	.500	2.250	2.335	1.838	---	---	.312	1.000	5.375	1.875	5.875
	1.000	3/4"-16 x 1.125	1"-14 x 1.125	7/8"-14 x 1.125	7/8"-14 x 1.875	1.499		.500								.875																			1.375	5.750	2.250	6.250
	1.375	1"-14 x 1.625	1 3/8"-12 x 1.625	1 1/4"-12 x 1.625	1 1/4"-12 x 2.500	1.999		.625								1.125																			1.625	6.000	2.500	6.500
2.500	.625	7/16"-20 x .750	5/8"-18 x .750	1/2"-20 x .750	1/2"-20 x 1.125	1.124	---	.375	.765	.500	1.938	2.281	.106	---	.500	.500	3.000	3/8	.375	1.500	1.000	.344	.500	.312	---	.750	3.750	.500	2.750	2.460	2.192	---	---	.312	1.000	5.500	1.875	6.000
	1.000	3/4"-16 x 1.125	1"-14 x 1.125	7/8"-14 x 1.125	7/8"-14 x 1.875	1.499		.500								.875																			1.375	5.875	2.250	6.375
	1.375	1"-14 x 1.625	1 3/8"-12 x 1.625	1 1/4"-12 x 1.625	1 1/4"-12 x 2.500	1.999		.625								1.125																			1.625	6.125	2.500	6.625
	1.750	1 1/4"-12 x 2.000	1 3/4"-12 x 2.000	1 1/2"-12 x 2.000	1 1/2"-12 x 3.000	2.374		.750								1.500																			1.875	6.375	2.750	6.875
3.250	1.000	3/4"-16 x 1.125	1"-14 x 1.125	7/8"-14 x 1.125	7/8"-14 x 1.875	1.499	---	.500	1.265	.750	2.719	3.094	.140	---	.625	.875	3.750	1/2	.625	1.750	1.250	.438	.562	.375	---	1.250	4.250	.750	3.500	2.750	2.758	---	---	.375	1.375	6.875	2.375	7.625
	1.375	1"-14 x 1.625	1 3/8"-12 x 1.625	1 1/4"-12 x 1.625	1 1/4"-12 x 2.500	1.999		.625								1.125																			1.625	7.125	2.625	7.875
	1.750	1 1/4"-12 x 2.000	1 3/4"-12 x 2.000	1 1/2"-12 x 2.000	1 1/2"-12 x 3.000	2.374		.750								1.500																			1.875	7.375	2.875	8.125
	2.000	1 1/2"-12 x 2.250	2"-12 x 2.250	1 3/4"-12 x 2.250	1 3/4"-12 x 3.500	2.624		.875								1.688																			2.000	7.500	3.000	8.250
4.000	1.000	3/4"-16 x 1.125	1"-14 x 1.125	7/8"-14 x 1.125	7/8"-14 x 1.875	1.499	2.562	.500						.250		.875								---	.375							2.969	2.500		1.375	6.875	2.375	7.625
	1.375	1"-14 x 1.625	1 3/8"-12 x 1.625	1 1/4"-12 x 1.625	1 1/4"-12 x 2.500	1.999	2.562	.625						.250		1.125								---	.375							2.969	2.500		1.625	7.125	2.625	7.875
	1.750	1 1/4"-12 x 2.000	1 3/4"-12 x 2.000	1 1/2"-12 x 2.000	1 1/2"-12 x 3.000	2.374	3.267	.750	1.265	.750	2.719	3.094	.140	.312	.625	1.500	4.500	1/2	.625	1.750	1.250	.438	.562	---	.375	1.250	4.250	.750	4.250	2.750	3.323	3.734	3.000	.375	1.875	7.375	2.875	8.125
	2.000	1 1/2"-12 x 2.250	2"-12 x 2.250	1 3/4"-12 x 2.250	1 3/4"-12 x 3.500	2.624	---	.875						---		1.688								.375	---							---	---		2.000	7.500	3.000	8.250
	2.500	1 7/8"-12 x 3.000	2 1/2"-12 x 3.000	2 1/4"-12 x 3.000	2 1/4"-12 x 4.500	3.124	---	1.000						---		2.062								.375	---							---	---		2.250	7.750	3.250	8.500
5.000	1.000	3/4"-16 x 1.125	1"-14 x 1.125	7/8"-14 x 1.125	7/8"-14 x 1.875	1.499	2.562	.500						.250		.875								---	.500							2.969	2.500		1.375	7.125	2.375	7.875
	1.375	1"-14 x 1.625	1 3/8"-12 x 1.625	1 1/4"-12 x 1.625	1 1/4"-12 x 2.500	1.999	2.562	.625						.250		1.125								---	.500							2.969	2.500		1.625	7.375	2.625	8.125
	1.750	1 1/4"-12 x 2.000	1 3/4"-12 x 2.000	1 1/2"-12 x 2.000	1 1/2"-12 x 3.000	2.374	3.267	.750						.312		1.500								---	.500							3.734	3.000		1.875	7.625	2.875	8.375
	2.000	1 1/2"-12 x 2.250	2"-12 x 2.250	1 3/4"-12 x 2.250	1 3/4"-12 x 3.500	2.624	3.812	.875	1.265	.750	2.719	3.094	.140	.312	.625	1.688	5.500	1/2	.625	1.750	1.250	.594	.750	---	.500	1.250	4.500	.750	5.250	3.000	4.101	4.312	3.750	.500	2.000	7.750	3.000	8.500
	2.500	1 7/8"-12 x 3.000	2 1/2"-12 x 3.000	2 1/4"-12 x 3.000	2 1/4"-12 x 4.500	3.124	3.812	1.000						.312		2.062								---	.500							4.312	3.750		2.250	8.000	3.250	8.750
	3.000	2 1/4"-12 x 3.500	3"-12 x 3.500	2 3/4"-12 x 3.500	2 3/4"-12 x 5.500	3.749	---	1.000						---		2.625								.500	---							---	---		2.250	8.000	3.250	8.750
	3.500	2 1/2"-12 x 3.500	3 1/2"-12 x 3.500	3 1/4"-12 x 3.500	3 1/4"-12 x 6.500	4.249	---	1.000						---		3.000								.500	---							---	---		2.250	8.000	3.250	8.750
6.000	1.375	1"-14 x 1.625	1 3/8"-12 x 1.625	1 1/4"-12 x 1.625	1 1/4"-12 x 2.500	1.999	3.267	.625						.312		1.125			.625					---	.500							3.734	3.000		1.625	8.125	2.750	9.125
	1.750	1 1/4"-12 x 2.000	1 3/4"-12 x 2.000	1 1/2"-12 x 2.000	1 1/2"-12 x 3.000	2.374	3.267	.750						.312		1.500			.625					---	.500							3.734	3.000		1.875	8.375	3.000	9.375
	2.000	1 1/2"-12 x 2.250	2"-12 x 2.250	1 3/4"-12 x 2.250	1 3/4"-12 x 3.500	2.624	3.812	.875						.312		1.688			.625					---	.500							4.312	3.750		2.000	8.500	3.125	9.500
	2.500	1 7/8"-12 x 3.000	2 1/2"-12 x 3.000	2 1/4"-12 x 3.000	2 1/4"-12 x 4.500	3.124	3.812	1.000	1.515	1.000	3.219	3.594	.140	.312	.750	2.062	6.500	3/4	.625	2.000	1.500	.594	.750	---	.500	1.500	5.000	1.000	6.250	3.250	4.879	4.312	3.750	.500	2.250	8.750	3.375	9.750
	3.000	2 1/4"-12 x 3.500	3"-12 x 3.500	2 3/4"-12 x 3.500	2 3/4"-12 x 5.500	3.749	4.700	1.000						.375		2.625			.625					---	.500							5.562	4.500		2.250	8.750	3.375	9.750
	3.500	2 1/2"-12 x 3.500	3 1/2"-12 x 3.500	3 1/4"-12 x 3.500	3 1/4"-12 x 6.500	4.249	5.200	1.000						.375		3.000			.625					---	.500							6.062	5.000		2.250	8.750	3.375	9.750
	4.000	3"-12 x 4.000	4"-12 x 4.000	3 3/4"-12 x 4.000	3 3/4"-12 x 7.500	4.749	---	1.000						---		3.375			.750					.500	---							---	---		2.250	8.750	3.375	9.750
BORE	MM	KM & KF	KD	KI	KA	B	BC	C	CB	CD	CM	CN	CP	CS	CW	D	E	EE	F	G	J	K	KN	KS	KU	L	LB	MR	OD	P	R	RR	RS	TR	WB	XC	Y	ZC

NEVA DESIGN

2.03

FILE: 2.03_LM03S2.dwg REV: 02/09/2010

27650 Groesbeck Hwy • Roseville, MI 48066-2759 • Phone 586.775.7211 • Fax 586.775.4545 • Toll Free 800.526.7968 • e-mail: sales@peninsularcylinders.com • www.peninsularcylinders.com

CAP FIXED CLEVIS

Medium Duty Aluminum Air Cylinder

Peninsular Mounting Style: **LM 3**

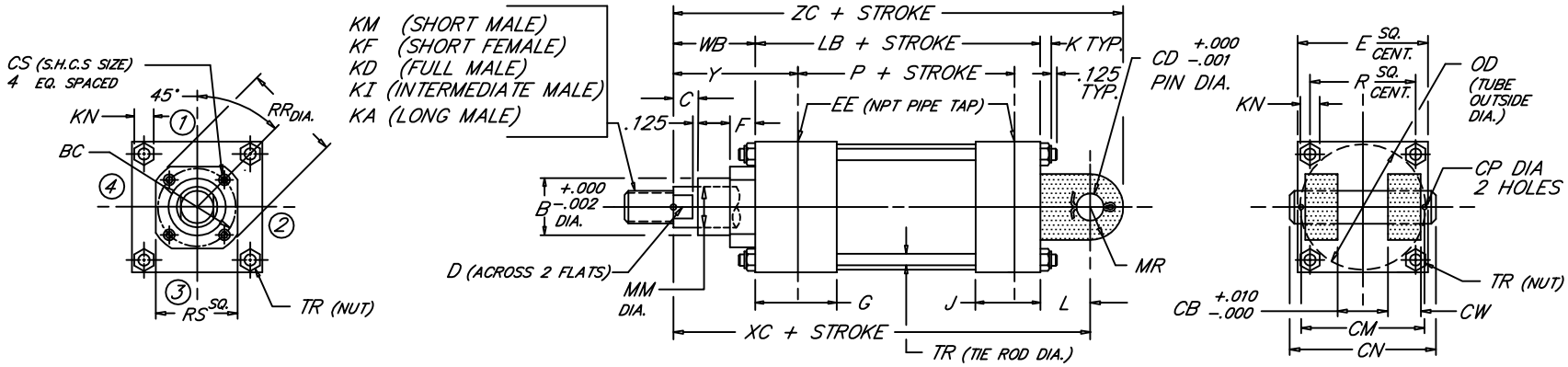

BORE	ROD MM	ROD THREAD X LENGTH KM & KF	KD	KI	KA	B	BC	C	CB	CD	CM	CN	CP	CS	CW	D	E	NPT EE	F	G	J	K	KN	L	LB	MR	OD	P	R	RR	RS	TR	WB	XC	Y	ZC
8.000	1.375	1"-14 x 1.625	1 3/8"-12 x 1.625	1 1/4"-12 x 1.625	1 1/4"-12 x 2.500	1.999	3.267	.625	1.515	1.000	3.219	3.594	.140	.312	.750	1.125	8.500	3/4	.625	2.000	1.500	.750	.938	1.500	5.125	1.000	8.450	3.375	6.435	3.734	3.000	.625	1.625	8.250	2.750	9.250
	1.750	1 1/4"-12 x 2.000	1 3/4"-12 x 2.000	1 1/2"-12 x 2.000	1 1/2"-12 x 3.000	2.374	3.267	.750						.312		1.500														3.734	3.000		1.875	8.500	3.000	9.500
	2.000	1 1/2"-12 x 2.250	2"-12 x 2.250	1 3/4"-12 x 2.250	1 3/4"-12 x 3.500	2.624	3.812	.875						.312		1.688														4.312	3.750		2.000	8.625	3.125	9.625
	2.500	1 7/8"-12 x 3.000	2 1/2"-12 x 3.000	2 1/4"-12 x 3.000	2 1/4"-12 x 4.500	3.124	3.812	1.000						.312		2.062														4.312	3.750		2.250	8.875	3.375	9.875
	3.000	2 1/4"-12 x 3.500	3"-12 x 3.500	2 3/4"-12 x 3.500	2 3/4"-12 x 5.500	3.749	4.700	1.000						.375		2.625														5.562	4.500		2.250	8.875	3.375	9.875
	3.500	2 1/2"-12 x 3.500	3 1/2"-12 x 3.500	3 1/4"-12 x 3.500	3 1/4"-12 x 6.500	4.249	5.200	1.000						.375		3.000														6.062	5.000		2.250	8.875	3.375	9.875
	4.000	3"-12 x 4.000	4"-12 x 4.000	3 3/4"-12 x 4.000	3 3/4"-12 x 7.500	4.749	5.700	1.000						.375		3.375														6.562	5.500		2.250	8.875	3.375	9.875
	4.500	3 1/4"-12 x 4.500	4 1/2"-12 x 4.500	4 1/4"-12 x 4.500	4 1/4"-12 x 8.250	5.249	6.200	1.000						.375		3.875														7.062	6.000		2.250	8.875	3.375	9.875
	5.000	3 1/2"-12 x 5.000	5"-12 x 5.000	4 3/4"-12 x 5.000	4 3/4"-12 x 9.000	5.749	6.700	1.000						.375		4.250														7.562	6.500		2.250	8.875	3.375	9.875
	5.500	4"-12 x 5.500	5 1/2"-12 x 5.500	5 1/4"-12 x 5.500	5 1/4"-12 x 10.000	6.249	7.125	1.000						.375		4.625														7.938	7.000		2.250	8.875	3.375	9.875
10.000	1.750	1 1/4"-12 x 2.000	1 3/4"-12 x 2.000	1 1/2"-12 x 2.000	1 1/2"-12 x 3.000	2.374	3.812	.750	2.015	1.375	4.250	4.656	.173	.312	1.000	1.500	10.625	1	.625	2.250	2.000	.875	1.062	2.125	6.375	1.375	10.450	4.250	7.920	4.312	3.750	.750	1.875	10.375	3.062	11.750
	2.000	1 1/2"-12 x 2.250	2"-12 x 2.250	1 3/4"-12 x 2.250	1 3/4"-12 x 3.500	2.624	3.812	.875						.312		1.688														4.312	3.750		2.000	10.500	3.187	11.875
	2.500	1 7/8"-12 x 3.000	2 1/2"-12 x 3.000	2 1/4"-12 x 3.000	2 1/4"-12 x 4.500	3.124	3.812	1.000						.312		2.062														4.312	3.750		2.250	10.750	3.437	12.125
	3.000	2 1/4"-12 x 3.500	3"-12 x 3.500	2 3/4"-12 x 3.500	2 3/4"-12 x 5.500	3.749	4.700	1.000						.375		2.625														5.562	4.500		2.250	10.750	3.437	12.125
	3.500	2 1/2"-12 x 3.500	3 1/2"-12 x 3.500	3 1/4"-12 x 3.500	3 1/4"-12 x 6.500	4.249	5.200	1.000						.375		3.000														6.062	5.000		2.250	10.750	3.437	12.125
	4.000	3"-12 x 4.000	4"-12 x 4.000	3 3/4"-12 x 4.000	3 3/4"-12 x 7.500	4.749	5.700	1.000						.375		3.375														6.562	5.500		2.250	10.750	3.437	12.125
	4.500	3 1/4"-12 x 4.500	4 1/2"-12 x 4.500	4 1/4"-12 x 4.500	4 1/4"-12 x 8.250	5.249	6.200	1.000						.375		3.875														7.062	6.000		2.250	10.750	3.437	12.125
	5.000	3 1/2"-12 x 5.000	5"-12 x 5.000	4 3/4"-12 x 5.000	4 3/4"-12 x 9.000	5.749	6.700	1.000						.375		4.250														7.562	6.500		2.250	10.750	3.437	12.125
	5.500	4"-12 x 5.500	5 1/2"-12 x 5.500	5 1/4"-12 x 5.500	5 1/4"-12 x 10.000	6.249	7.125	1.000						.375		4.625														7.938	7.000		2.250	10.750	3.437	12.125
12.000	2.000	1 1/2"-12 x 2.250	2"-12 x 2.250	1 3/4"-12 x 2.250	1 3/4"-12 x 3.500	2.624	3.812	.875	2.515	1.750	5.250	5.656	.173	.312	1.250	1.688	12.750	1	.625	2.250	2.000	.875	1.062	2.250	6.875	1.750	12.450	4.750	9.405	4.312	3.750	.750	2.000	11.125	3.187	12.875
	2.500	1 7/8"-12 x 3.000	2 1/2"-12 x 3.000	2 1/4"-12 x 3.000	2 1/4"-12 x 4.500	3.124	3.812	1.000						.312		2.062														4.312	3.750		2.250	11.375	3.437	13.125
	3.000	2 1/4"-12 x 3.500	3"-12 x 3.500	2 3/4"-12 x 3.500	2 3/4"-12 x 5.500	3.749	4.700	1.000						.375		2.625														5.562	4.500		2.250	11.375	3.437	13.125
	3.500	2 1/2"-12 x 3.500	3 1/2"-12 x 3.500	3 1/4"-12 x 3.500	3 1/4"-12 x 6.500	4.249	5.200	1.000						.375		3.000														6.062	5.000		2.250	11.375	3.437	13.125
	4.000	3"-12 x 4.000	4"-12 x 4.000	3 3/4"-12 x 4.000	3 3/4"-12 x 7.500	4.749	5.700	1.000						.375		3.375														6.562	5.500		2.250	11.375	3.437	13.125
	4.500	3 1/4"-12 x 4.500	4 1/2"-12 x 4.500	4 1/4"-12 x 4.500	4 1/4"-12 x 8.250	5.249	6.200	1.000						.375		3.875														7.062	6.000		2.250	11.375	3.437	13.125
	5.000	3 1/2"-12 x 5.000	5"-12 x 5.000	4 3/4"-12 x 5.000	4 3/4"-12 x 9.000	5.749	6.700	1.000						.375		4.250														7.562	6.500		2.250	11.375	3.437	13.125
	5.500	4"-12 x 5.500	5 1/2"-12 x 5.500	5 1/4"-12 x 5.500	5 1/4"-12 x 10.000	6.249	7.125	1.000						.375		4.625														7.938	7.000		2.250	11.375	3.437	13.125
14.000	2.500	1 7/8"-12 x 3.000	2 1/2"-12 x 3.000	2 1/4"-12 x 3.000	2 1/4"-12 x 4.500	3.124	3.812							.312		2.062														4.312	3.750					
	3.000	2 1/4"-12 x 3.500	3"-12 x 3.500	2 3/4"-12 x 3.500	2 3/4"-12 x 5.500	3.749	4.700							.375		2.625														5.562	4.500					
	3.500	2 1/2"-12 x 3.500	3 1/2"-12 x 3.500	3 1/4"-12 x 3.500	3 1/4"-12 x 6.500	4.249	5.200							.375		3.000														6.062	5.000					
	4.000	3"-12 x 4.000	4"-12 x 4.000	3 3/4"-12 x 4.000	3 3/4"-12 x 7.500	4.749	5.700	1.000	2.515	2.000	5.281	5.719	.204	.375	1.250	3.375	14.750	1 1/4	.625	2.750	2.250	1.000	1.250	2.500	8.125	2.000	14.450	5.625	10.889	6.562	5.500	.875	2.250	12.875	3.688	14.875
	4.500	3 1/4"-12 x 4.500	4 1/2"-12 x 4.500	4 1/4"-12 x 4.500	4 1/4"-12 x 8.250	5.249	6.200							.375		3.875														7.062	6.000					
	5.000	3 1/2"-12 x 5.000	5"-12 x 5.000	4 3/4"-12 x 5.000	4 3/4"-12 x 9.000	5.749	6.700							.375		4.250														7.562	6.500					
	5.500	4"-12 x 5.500	5 1/2"-12 x 5.500	5 1/4"-12 x 5.500	5 1/4"-12 x 10.000	6.249	7.125							.375		4.625														7.938	7.000					
BORE	MM	KM & KF	KD	KI	KA	B	BC	C	CB	CD	CM	CN	CP	CS	CW	D	E	EE	F	G	J	K	KN	L	LB	MR	OD	P	R	RR	RS	TR	WB	XC	Y	ZC

NEVA DESIGN

FILE: 2.03_LM03L2.dwg REV: 02/09/2010

27650 Groesbeck Hwy • Roseville, MI 48066-2759 • Phone 586.775.7211 • Fax 586.775.4545 • Toll Free 800.526.7968 • e-mail: sales@peninsularcylinders.com • www.peninsularcylinders.com

HEAD RECTANGULAR FLANGE

Peninsular Mounting Style: **LM 4**

Medium Duty Aluminum Air Cylinder

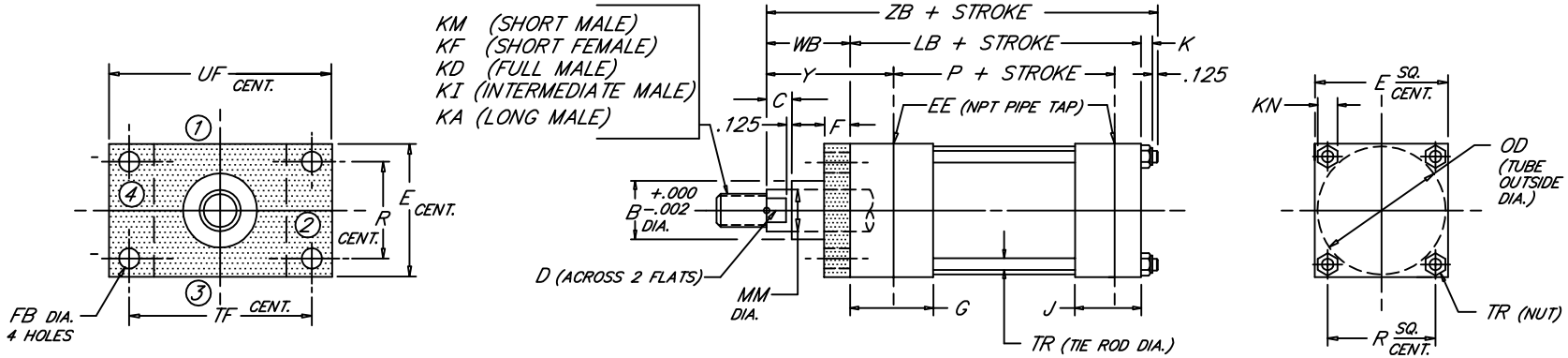

BORE	ROD MM	ROD THREAD X LENGTH KM & KF	KD	KI	KA	B	C	D	E	NPT EE	F	FB	G	J	K	KN	LB	OD	P	R	TF	TR	UF	WB	Y	ZB
1.500	.625	7/16"-20 x .750	5/8"-18 x .750	1/2"-20 x .750	1/2"-20 x 1.125	1.124	.375	.500	2.000	3/8	.375	.312	1.500	1.000	.312	.438	3.625	1.750	2.335	1.428	2.750	.250	3.375	1.000	1.875	5.062
	1.000	3/4"-16 x 1.125	1"-14 x 1.125	7/8"-14 x 1.125	7/8"-14 x 1.875	1.499	.500	.875																1.375	2.250	5.437
2.000	.625	7/16"-20 x .750	5/8"-18 x .750	1/2"-20 x .750	1/2"-20 x 1.125	1.124	.375	.500	2.500	3/8	.375	.375	1.500	1.000	.344	.500	3.625	2.250	2.335	1.838	3.375	.312	4.125	1.000	1.875	5.094
	1.000	3/4"-16 x 1.125	1"-14 x 1.125	7/8"-14 x 1.125	7/8"-14 x 1.875	1.499	.500	.875																1.375	2.250	5.469
	1.375	1"-14 x 1.625	1 3/8"-12 x 1.625	1 1/4"-12 x 1.625	1 1/4"-12 x 2.500	1.999	.625	1.125																1.625	2.500	5.719
2.500	.625	7/16"-20 x .750	5/8"-18 x .750	1/2"-20 x .750	1/2"-20 x 1.125	1.124	.375	.500	3.000	3/8	.375	.375	1.500	1.000	.344	.500	3.750	2.750	2.460	2.192	3.875	.312	4.625	1.000	1.875	5.219
	1.000	3/4"-16 x 1.125	1"-14 x 1.125	7/8"-14 x 1.125	7/8"-14 x 1.875	1.499	.500	.875																1.375	2.250	5.594
	1.375	1"-14 x 1.625	1 3/8"-12 x 1.625	1 1/4"-12 x 1.625	1 1/4"-12 x 2.500	1.999	.625	1.125																1.625	2.500	5.844
	1.750	1 1/4"-12 x 2.000	1 3/4"-12 x 2.000	1 1/2"-12 x 2.000	1 1/2"-12 x 3.000	2.374	.750	1.500																1.875	2.750	6.094
3.250	1.000	3/4"-16 x 1.125	1"-14 x 1.125	7/8"-14 x 1.125	7/8"-14 x 1.875	1.499	.500	.875	3.750	1/2	.625	.438	1.750	1.250	.438	.562	4.250	3.500	2.750	2.758	4.688	.375	5.500	1.375	2.375	6.188
	1.375	1"-14 x 1.625	1 3/8"-12 x 1.625	1 1/4"-12 x 1.625	1 1/4"-12 x 2.500	1.999	.625	1.125																1.625	2.625	6.438
	1.750	1 1/4"-12 x 2.000	1 3/4"-12 x 2.000	1 1/2"-12 x 2.000	1 1/2"-12 x 3.000	2.374	.750	1.500																1.875	2.875	6.688
	2.000	1 1/2"-12 x 2.250	2"-12 x 2.250	1 3/4"-12 x 2.250	1 3/4"-12 x 3.500	2.624	.875	1.688																2.000	3.000	6.813
4.000	1.000	3/4"-16 x 1.125	1"-14 x 1.125	7/8"-14 x 1.125	7/8"-14 x 1.875	1.499	.500	.875	4.500	1/2	.625	.438	1.750	1.250	.438	.562	4.250	4.250	2.750	3.323	5.438	.375	6.250	1.375	2.375	6.188
	1.375	1"-14 x 1.625	1 3/8"-12 x 1.625	1 1/4"-12 x 1.625	1 1/4"-12 x 2.500	1.999	.625	1.125																1.625	2.625	6.438
	1.750	1 1/4"-12 x 2.000	1 3/4"-12 x 2.000	1 1/2"-12 x 2.000	1 1/2"-12 x 3.000	2.374	.750	1.500																1.875	2.875	6.688
	2.000	1 1/2"-12 x 2.250	2"-12 x 2.250	1 3/4"-12 x 2.250	1 3/4"-12 x 3.500	2.624	.875	1.688																2.000	3.000	6.813
	2.500	1 7/8"-12 x 3.000	2 1/2"-12 x 3.000	2 1/4"-12 x 3.000	2 1/4"-12 x 4.500	3.124	1.000	2.062																2.250	3.250	7.063
5.000	1.000	3/4"-16 x 1.125	1"-14 x 1.125	7/8"-14 x 1.125	7/8"-14 x 1.875	1.499	.500	.875	5.500	1/2	.625	.562	1.750	1.250	.594	.750	4.500	5.250	3.000	4.101	6.625	.500	7.625	1.375	2.375	6.594
	1.375	1"-14 x 1.625	1 3/8"-12 x 1.625	1 1/4"-12 x 1.625	1 1/4"-12 x 2.500	1.999	.625	1.125																1.625	2.625	6.844
	1.750	1 1/4"-12 x 2.000	1 3/4"-12 x 2.000	1 1/2"-12 x 2.000	1 1/2"-12 x 3.000	2.374	.750	1.500																1.875	2.875	7.094
	2.000	1 1/2"-12 x 2.250	2"-12 x 2.250	1 3/4"-12 x 2.250	1 3/4"-12 x 3.500	2.624	.875	1.688																2.000	3.000	7.219
	2.500	1 7/8"-12 x 3.000	2 1/2"-12 x 3.000	2 1/4"-12 x 3.000	2 1/4"-12 x 4.500	3.124	1.000	2.062																2.250	3.250	7.469
	3.000	2 1/4"-12 x 3.500	3"-12 x 3.500	2 3/4"-12 x 3.500	2 3/4"-12 x 5.500	3.749	1.000	2.625																2.250	3.250	7.469
	3.500	2 1/2"-12 x 3.500	3 1/2"-12 x 3.500	3 1/4"-12 x 3.500	3 1/4"-12 x 6.500	4.249	1.000	3.000																2.250	3.250	7.469
6.000	1.375	1"-14 x 1.625	1 3/8"-12 x 1.625	1 1/4"-12 x 1.625	1 1/4"-12 x 2.500	1.999	.625	1.125	6.500	3/4	.750	.562	2.000	1.500	.594	.750	5.000	6.250	3.250	4.879	7.625	.500	8.625	1.625	2.750	7.344
	1.750	1 1/4"-12 x 2.000	1 3/4"-12 x 2.000	1 1/2"-12 x 2.000	1 1/2"-12 x 3.000	2.374	.750	1.500																1.875	3.000	7.594
	2.000	1 1/2"-12 x 2.250	2"-12 x 2.250	1 3/4"-12 x 2.250	1 3/4"-12 x 3.500	2.624	.875	1.688																2.000	3.125	7.719
	2.500	1 7/8"-12 x 3.000	2 1/2"-12 x 3.000	2 1/4"-12 x 3.000	2 1/4"-12 x 4.500	3.124	1.000	2.062																2.250	3.375	7.969
	3.000	2 1/4"-12 x 3.500	3"-12 x 3.500	2 3/4"-12 x 3.500	2 3/4"-12 x 5.500	3.749	1.000	2.625																2.250	3.375	7.969
	3.500	2 1/2"-12 x 3.500	3 1/2"-12 x 3.500	3 1/4"-12 x 3.500	3 1/4"-12 x 6.500	4.249	1.000	3.000																2.250	3.375	7.969
	4.000	3"-12 x 4.000	4"-12 x 4.000	3 3/4"-12 x 4.000	3 3/4"-12 x 7.500	4.749	1.000	3.375																2.250	3.375	7.969
BORE	MM	KM & KF	KD	KI	KA	B	C	D	E	EE	F	FB	G	J	K	KN	LB	OD	P	R	TF	TR	UF	WB	Y	ZB

NEMA DESIGN

2.04

FILE: 2.04_LM04S2.dwg REV: 02/09/2010

27650 Groesbeck Hwy • Roseville, MI 48066-2759 • Phone 586.775.7211 • Fax 586.775.4545 • Toll Free 800.526.7968 • e-mail: sales@peninsularcylinders.com • www.peninsularcylinders.com

CAP RECTANGULAR FLANGE

Peninsular Mounting Style: **LM 5**

Medium Duty Aluminum Air Cylinder

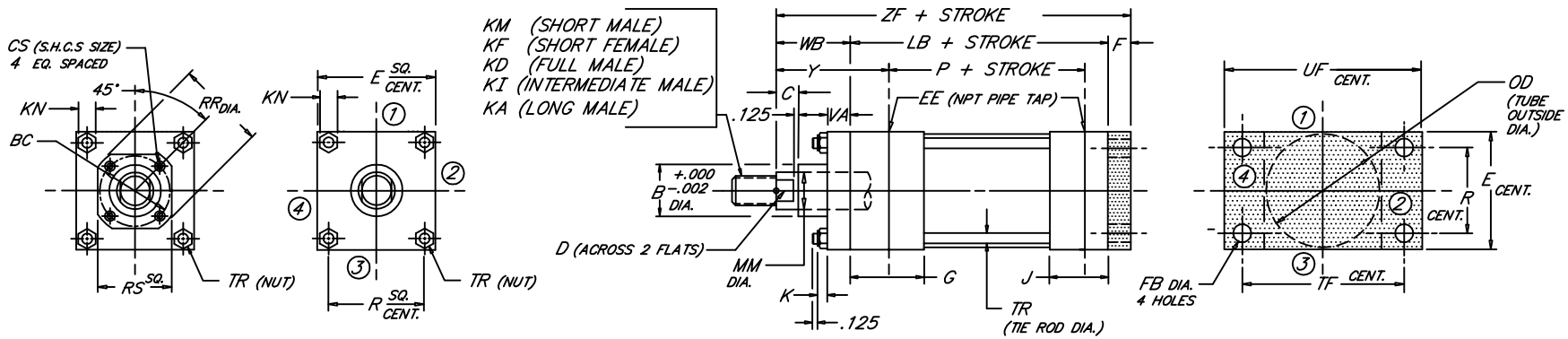

BORE	MM	KM & KF (ROD THREAD X LENGTH)	KD (ROD THREAD X LENGTH)	KI (ROD THREAD X LENGTH)	KA (ROD THREAD X LENGTH)	B	BC	C	CS	D	E	EE (NPT)	F	FB	G	J	K	KN	LB	OD	P	R	RR	RS	TF	TR	UF	VA	WB	Y	ZF
1.500	.625	7/16"-20 x .750	5/8"-18 x .750	1/2"-20 x .750	1/2"-20 x 1.125	1.124	---	.375	---	.500	2.000	3/8	.375	.312	1.500	1.000	.312	.438	3.625	1.750	2.335	1.428	---	---	2.750	.250	3.375	.375	1.000	1.875	5.000
	1.000	3/4"-16 x 1.125	1"-14 x 1.125	7/8"-14 x 1.125	7/8"-14 x 1.875	1.499		.500		.875																			1.375	2.250	5.375
2.000	.625	7/16"-20 x .750	5/8"-18 x .750	1/2"-20 x .750	1/2"-20 x 1.125	1.124	---	.375	---	.500	2.500	3/8	.375	.375	1.500	1.000	.344	.500	3.625	2.250	2.335	1.838	---	---	3.375	.312	4.125	.375	1.000	1.875	5.000
	1.000	3/4"-16 x 1.125	1"-14 x 1.125	7/8"-14 x 1.125	7/8"-14 x 1.875	1.499		.500		.875																			1.375	2.250	5.375
	1.375	1"-14 x 1.625	1 3/8"-12 x 1.625	1 1/4"-12 x 1.625	1 1/4"-12 x 2.500	1.999		.625		1.125																			1.625	2.500	5.625
2.500	.625	7/16"-20 x .750	5/8"-18 x .750	1/2"-20 x .750	1/2"-20 x 1.125	1.124	---	.375	---	.500	3.000	3/8	.375	.375	1.500	1.000	.344	.500	3.750	2.750	2.460	2.192	---	---	3.875	.312	4.625	.375	1.000	1.875	5.125
	1.000	3/4"-16 x 1.125	1"-14 x 1.125	7/8"-14 x 1.125	7/8"-14 x 1.875	1.499		.500		.875																			1.375	2.250	5.500
	1.375	1"-14 x 1.625	1 3/8"-12 x 1.625	1 1/4"-12 x 1.625	1 1/4"-12 x 2.500	1.999		.625		1.125																			1.625	2.500	5.750
	1.750	1 1/4"-12 x 2.000	1 3/4"-12 x 2.000	1 1/2"-12 x 2.000	1 1/2"-12 x 3.000	2.374		.750		1.500																			1.875	2.750	6.000
3.250	1.000	3/4"-16 x 1.125	1"-14 x 1.125	7/8"-14 x 1.125	7/8"-14 x 1.875	1.499	---	.500	---	.875	3.750	1/2	.625	.438	1.750	1.250	.438	.562	4.250	3.500	2.750	2.758	---	---	4.688	.375	5.500	.625	1.375	2.375	6.250
	1.375	1"-14 x 1.625	1 3/8"-12 x 1.625	1 1/4"-12 x 1.625	1 1/4"-12 x 2.500	1.999		.625		1.125																			1.625	2.625	6.500
	1.750	1 1/4"-12 x 2.000	1 3/4"-12 x 2.000	1 1/2"-12 x 2.000	1 1/2"-12 x 3.000	2.374		.750		1.500																			1.875	2.875	6.750
	2.000	1 1/2"-12 x 2.250	2"-12 x 2.250	1 3/4"-12 x 2.250	1 3/4"-12 x 3.500	2.624		.875		1.688																			2.000	3.000	6.875
4.000	1.000	3/4"-16 x 1.125	1"-14 x 1.125	7/8"-14 x 1.125	7/8"-14 x 1.875	1.499	2.562	.500	.250	.875	4.500	1/2	.625	.438	1.750	1.250	.438	.562	4.250	4.250	2.750	3.323	2.969	2.500	5.438	.375	6.250	.625	1.375	2.375	6.250
	1.375	1"-14 x 1.625	1 3/8"-12 x 1.625	1 1/4"-12 x 1.625	1 1/4"-12 x 2.500	1.999	2.562	.625	.250	1.125													2.969	2.500					1.625	2.625	6.500
	1.750	1 1/4"-12 x 2.000	1 3/4"-12 x 2.000	1 1/2"-12 x 2.000	1 1/2"-12 x 3.000	2.374	3.267	.750	.312	1.500													3.734	3.000					1.875	2.875	6.750
	2.000	1 1/2"-12 x 2.250	2"-12 x 2.250	1 3/4"-12 x 2.250	1 3/4"-12 x 3.500	2.624	---	.875	---	1.688													---	---					2.000	3.000	6.875
	2.500	1 7/8"-12 x 3.000	2 1/2"-12 x 3.000	2 1/4"-12 x 3.000	2 1/4"-12 x 4.500	3.124	---	1.000	---	2.062													---	---					2.250	3.250	7.125
5.000	1.000	3/4"-16 x 1.125	1"-14 x 1.125	7/8"-14 x 1.125	7/8"-14 x 1.875	1.499	2.562	.500	.250	.875	5.500	1/2	.625	.562	1.750	1.250	.594	.750	4.500	5.250	3.000	4.101	2.969	2.500	6.625	.500	7.625	.625	1.375	2.375	6.500
	1.375	1"-14 x 1.625	1 3/8"-12 x 1.625	1 1/4"-12 x 1.625	1 1/4"-12 x 2.500	1.999	2.562	.625	.250	1.125													2.969	2.500					1.625	2.625	6.750
	1.750	1 1/4"-12 x 2.000	1 3/4"-12 x 2.000	1 1/2"-12 x 2.000	1 1/2"-12 x 3.000	2.374	3.267	.750	.312	1.500													3.734	3.000					1.875	2.875	7.000
	2.000	1 1/2"-12 x 2.250	2"-12 x 2.250	1 3/4"-12 x 2.250	1 3/4"-12 x 3.500	2.624	3.812	.875	.312	1.688													4.312	3.750					2.000	3.000	7.125
	2.500	1 7/8"-12 x 3.000	2 1/2"-12 x 3.000	2 1/4"-12 x 3.000	2 1/4"-12 x 4.500	3.124	3.812	1.000	.312	2.062													4.312	3.750					2.250	3.250	7.375
	3.000	2 1/4"-12 x 3.500	3"-12 x 3.500	2 3/4"-12 x 3.500	2 3/4"-12 x 5.500	3.749	---	1.000	---	2.625													---	---					2.250	3.250	7.375
	3.500	2 1/2"-12 x 3.500	3 1/2"-12 x 3.500	3 1/4"-12 x 3.500	3 1/4"-12 x 6.500	4.249	---	1.000	---	3.000													---	---					2.250	3.250	7.375
6.000	1.375	1"-14 x 1.625	1 3/8"-12 x 1.625	1 1/4"-12 x 1.625	1 1/4"-12 x 2.500	1.999	3.267	.625	.312	1.125	6.500	3/4	.750	.562	2.000	1.500	.594	.750	5.000	6.250	3.250	4.879	3.734	3.000	7.625	.500	8.625	.625	1.625	2.750	7.375
	1.750	1 1/4"-12 x 2.000	1 3/4"-12 x 2.000	1 1/2"-12 x 2.000	1 1/2"-12 x 3.000	2.374	3.267	.750	.312	1.500													3.734	3.000				.625	1.875	3.000	7.625
	2.000	1 1/2"-12 x 2.250	2"-12 x 2.250	1 3/4"-12 x 2.250	1 3/4"-12 x 3.500	2.624	3.812	.875	.312	1.688													4.312	3.750				.625	2.000	3.125	7.750
	2.500	1 7/8"-12 x 3.000	2 1/2"-12 x 3.000	2 1/4"-12 x 3.000	2 1/4"-12 x 4.500	3.124	3.812	1.000	.312	2.062													4.312	3.750				.625	2.250	3.375	8.000
	3.000	2 1/4"-12 x 3.500	3"-12 x 3.500	2 3/4"-12 x 3.500	2 3/4"-12 x 5.500	3.749	4.700	1.000	.375	2.625													5.562	4.500				.625	2.250	3.375	8.000
	3.500	2 1/2"-12 x 3.500	3 1/2"-12 x 3.500	3 1/4"-12 x 3.500	3 1/4"-12 x 6.500	4.249	5.200	1.000	.375	3.000													6.062	5.000				.625	2.250	3.375	8.000
	4.000	3"-12 x 4.000	4"-12 x 4.000	3 3/4"-12 x 4.000	3 3/4"-12 x 7.500	4.749	---	1.000	---	3.375													---	---				.750	2.250	3.375	8.000
BORE	MM	KM & KF	KD	KI	KA	B	BC	C	CS	D	E	EE	F	FB	G	J	K	KN	LB	OD	P	R	RR	RS	TF	TR	UF	VA	WB	Y	ZF

NEVA DESIGN

2.05

FILE: 2.05_LM05S2.dwg REV: 02/09/2010

27650 Groesbeck Hwy • Roseville, MI 48066-2759 • Phone 586.775.7211 • Fax 586.775.4545 • Toll Free 800.526.7968 • e-mail: sales@peninsularcylinders.com • www.peninsularcylinders.com

INTERMEDIATE TRUNNION

Medium Duty Aluminum Air Cylinder

Peninsular Mounting Style: **LM 6**

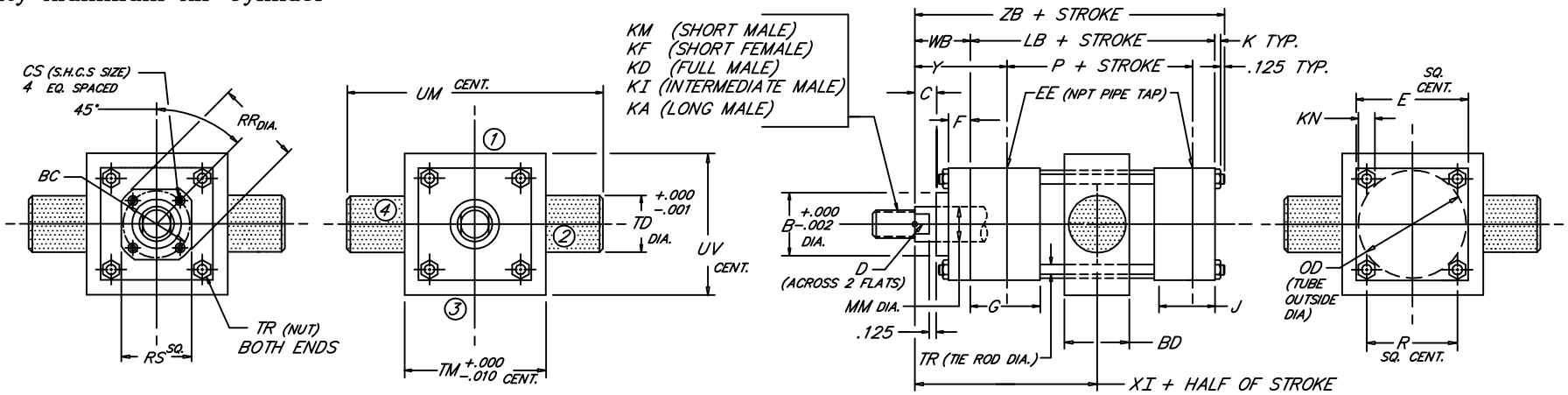

BORE	ROD MM	ROD THREAD X LENGTH KM & KF	KD	KI	KA	B	BC	BD	C	CS	D	E	NPT EE	F	G	J	K	KN	LB	OD	P	R	RR	RS	TD	TM	TR	UM	UV	WB	XI	Y	ZB	MINIMUM STROKE
1.500	.625	7/16"-20 x .750	5/8"-18 x .750	1/2"-20 x .750	1/2"-20 x 1.125	1.124	---	1.25	.375	---	.500	2.000	3/8	.375	1.500	1.000	.312	.438	3.625	1.750	2.335	1.428	---	---	1.000	2.500	.250	4.500	2.500	1.000	3.063	1.875	5.062	.125
	1.000	3/4"-16 x 1.125	1"-14 x 1.125	7/8"-14 x 1.125	7/8"-14 x 1.875	1.499			.500		.875																			1.375	3.438	2.250	5.437	
2.000	.625	7/16"-20 x .750	5/8"-18 x .750	1/2"-20 x .750	1/2"-20 x 1.125	1.124	---	1.50	.375	---	.500	2.500	3/8	.375	1.500	1.000	.344	.500	3.625	2.250	2.335	1.838	---	---	1.000	3.000	.312	5.000	3.000	1.000	3.063	1.875	5.094	.375
	1.000	3/4"-16 x 1.125	1"-14 x 1.125	7/8"-14 x 1.125	7/8"-14 x 1.875	1.499			.500		.875																			1.375	3.438	2.250	5.469	
	1.375	1"-14 x 1.625	1 3/8"-12 x 1.625	1 1/4"-12 x 1.625	1 1/4"-12 x 2.500	1.999			.625		1.125																			1.625	3.688	2.500	5.719	
2.500	.625	7/16"-20 x .750	5/8"-18 x .750	1/2"-20 x .750	1/2"-20 x 1.125	1.124	---	1.50	.375	---	.500	3.000	3/8	.375	1.500	1.000	.344	.500	3.750	2.750	2.460	2.192	---	---	1.000	3.500	.312	5.500	3.500	1.000	3.125	1.875	5.219	.250
	1.000	3/4"-16 x 1.125	1"-14 x 1.125	7/8"-14 x 1.125	7/8"-14 x 1.875	1.499			.500		.875																			1.375	3.500	2.250	5.594	
	1.375	1"-14 x 1.625	1 3/8"-12 x 1.625	1 1/4"-12 x 1.625	1 1/4"-12 x 2.500	1.999			.625		1.125																			1.625	3.750	2.500	5.844	
	1.750	1 1/4"-12 x 2.000	1 3/4"-12 x 2.000	1 1/2"-12 x 2.000	1 1/2"-12 x 3.000	2.374			.750		1.500																			1.875	4.000	2.750	6.094	
3.250	1.000	3/4"-16 x 1.125	1"-14 x 1.125	7/8"-14 x 1.125	7/8"-14 x 1.875	1.499	---	2.00	.500	---	.875	3.750	1/2	.625	1.750	1.250	.438	.562	4.250	3.500	2.750	2.758	---	---	1.000	4.500	.375	6.500	4.250	1.375	3.750	2.375	6.188	.750
	1.375	1"-14 x 1.625	1 3/8"-12 x 1.625	1 1/4"-12 x 1.625	1 1/4"-12 x 2.500	1.999			.625		1.125																			1.625	4.000	2.625	6.438	
	1.750	1 1/4"-12 x 2.000	1 3/4"-12 x 2.000	1 1/2"-12 x 2.000	1 1/2"-12 x 3.000	2.374			.750		1.500																			1.875	4.250	2.875	6.688	
	2.000	1 1/2"-12 x 2.250	2"-12 x 2.250	1 3/4"-12 x 2.250	1 3/4"-12 x 3.500	2.624			.875		1.688																			2.000	4.375	3.000	6.813	
4.000	1.000	3/4"-16 x 1.125	1"-14 x 1.125	7/8"-14 x 1.125	7/8"-14 x 1.875	1.499	2.562	2.00	.500	.250	.875	4.500	1/2	.625	1.750	1.250	.438	.562	4.250	4.250	2.750	3.323	2.969	2.500	1.000	5.250	.375	7.250	5.000	1.375	3.750	2.375	6.188	.750
	1.375	1"-14 x 1.625	1 3/8"-12 x 1.625	1 1/4"-12 x 1.625	1 1/4"-12 x 2.500	1.999	2.562		.625	.250	1.125												2.969	2.500						1.625	4.000	2.625	6.438	
	1.750	1 1/4"-12 x 2.000	1 3/4"-12 x 2.000	1 1/2"-12 x 2.000	1 1/2"-12 x 3.000	2.374	3.267		.750	.312	1.500												3.734	3.000						1.875	4.250	2.875	6.688	
	2.000	1 1/2"-12 x 2.250	2"-12 x 2.250	1 3/4"-12 x 2.250	1 3/4"-12 x 3.500	2.624	---		.875	---	1.688												---	---						2.000	4.375	3.000	6.813	
	2.500	1 7/8"-12 x 3.000	2 1/2"-12 x 3.000	2 1/4"-12 x 3.000	2 1/4"-12 x 4.500	3.124	---		1.000	---	2.062												---	---						2.250	4.625	3.250	7.063	
5.000	1.000	3/4"-16 x 1.125	1"-14 x 1.125	7/8"-14 x 1.125	7/8"-14 x 1.875	1.499	2.562	2.00	.500	.250	.875	5.500	1/2	.625	1.750	1.250	.594	.750	4.500	5.250	3.000	4.101	2.969	2.500	1.000	6.250	.500	8.250	6.000	1.375	3.875	2.375	6.594	.500
	1.375	1"-14 x 1.625	1 3/8"-12 x 1.625	1 1/4"-12 x 1.625	1 1/4"-12 x 2.500	1.999	2.562		.625	.250	1.125												2.969	2.500						1.625	4.125	2.625	6.844	
	1.750	1 1/4"-12 x 2.000	1 3/4"-12 x 2.000	1 1/2"-12 x 2.000	1 1/2"-12 x 3.000	2.374	3.267		.750	.312	1.500												3.734	3.000						1.875	4.375	2.875	7.094	
	2.000	1 1/2"-12 x 2.250	2"-12 x 2.250	1 3/4"-12 x 2.250	1 3/4"-12 x 3.500	2.624	3.812		.875	.312	1.688												4.312	3.750						2.000	4.500	3.000	7.219	
	2.500	1 7/8"-12 x 3.000	2 1/2"-12 x 3.000	2 1/4"-12 x 3.000	2 1/4"-12 x 4.500	3.124	3.812		1.000	.312	2.062												4.312	3.750						2.250	4.750	3.250	7.469	
	3.000	2 1/4"-12 x 3.500	3"-12 x 3.500	2 3/4"-12 x 3.500	2 3/4"-12 x 5.500	3.749	---		1.000	---	2.625												---	---						2.250	4.750	3.250	7.469	
	3.500	2 1/2"-12 x 3.500	3 1/2"-12 x 3.500	3 1/4"-12 x 3.500	3 1/4"-12 x 6.500	4.249	---		1.000	---	3.000												---	---						2.250	4.750	3.250	7.469	
6.000	1.375	1"-14 x 1.625	1 3/8"-12 x 1.625	1 1/4"-12 x 1.625	1 1/4"-12 x 2.500	1.999	3.267	2.50	.625	.312	1.125	6.500	3/4	.625	2.000	1.500	.594	.750	5.000	6.250	3.250	4.879	3.734	3.000	1.375	7.625	.500	10.375	7.000	1.625	4.375	2.750	7.344	1.000
	1.750	1 1/4"-12 x 2.000	1 3/4"-12 x 2.000	1 1/2"-12 x 2.000	1 1/2"-12 x 3.000	2.374	3.267		.750	.312	1.500			.625									3.734	3.000						1.875	4.625	3.000	7.594	
	2.000	1 1/2"-12 x 2.250	2"-12 x 2.250	1 3/4"-12 x 2.250	1 3/4"-12 x 3.500	2.624	3.812		.875	.312	1.688			.625									4.312	3.750						2.000	4.750	3.125	7.719	
	2.500	1 7/8"-12 x 3.000	2 1/2"-12 x 3.000	2 1/4"-12 x 3.000	2 1/4"-12 x 4.500	3.124	3.812		1.000	.312	2.062			.625									4.312	3.750						2.250	5.000	3.375	7.969	
	3.000	2 1/4"-12 x 3.500	3"-12 x 3.500	2 3/4"-12 x 3.500	2 3/4"-12 x 5.500	3.749	4.700		1.000	.375	2.625			.625									5.562	4.500						2.250	5.000	3.375	7.969	
	3.500	2 1/2"-12 x 3.500	3 1/2"-12 x 3.500	3 1/4"-12 x 3.500	3 1/4"-12 x 6.500	4.249	5.200		1.000	.375	3.000			.625									6.062	5.000						2.250	5.000	3.375	7.969	
	4.000	3"-12 x 4.000	4"-12 x 4.000	3 3/4"-12 x 4.000	3 3/4"-12 x 7.500	4.749	---		1.000	---	3.375			.750									---	---						2.250	5.000	3.375	7.969	
BORE	MM	KM & KF	KD	KI	KA	B	BC	BD	C	CS	D	E	EE	F	G	J	K	KN	LB	OD	P	R	RR	RS	TD	TM	TR	UM	UV	WB	XI	Y	ZB	MIN STR

NEWA DESIGN

2.06

FILE: 2.06_LM06S2.dwg REV: 02/09/2010

27650 Groesbeck Hwy • Roseville, MI 48066-2759 • Phone 586.775.7211 • Fax 586.775.4545 • Toll Free 800.526.7968 • e-mail: sales@peninsularcylinders.com • www.peninsularcylinders.com

CAP TRUNNION

Medium Duty Aluminum Air Cylinder

Peninsular Mounting Style: **LM 7**

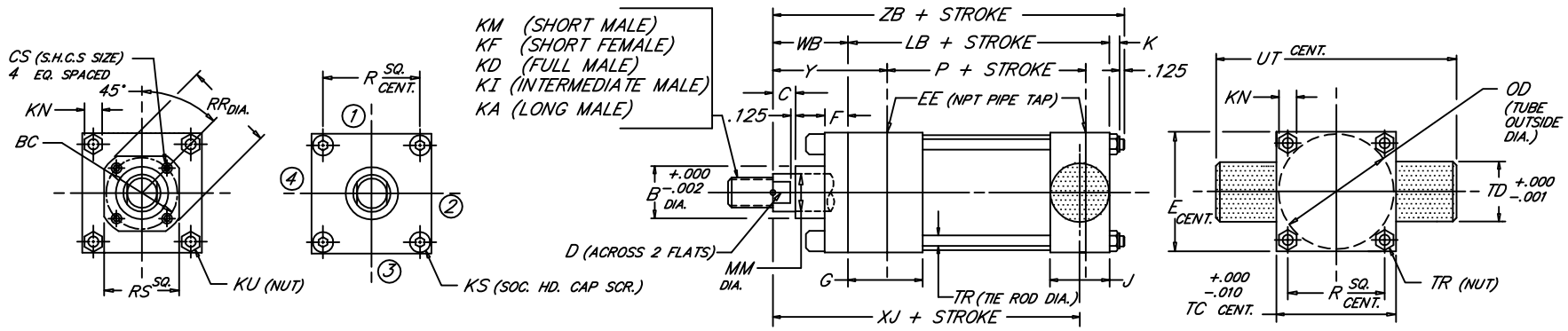

BORE	MM	KM & KF	KD	KI	KA	B	BC	C	CS	D	E	EE	F	G	J	K	KN	KS	KU	LB	OD	P	R	RR	RS	TC	TD	TR	UT	WB	Y	XJ	ZB
	ROD	ROD THREAD X LENGTH										NPT																					
1.500	.625	7/16"-20 x .750	5/8"-18 x .750	1/2"-20 x .750	1/2"-20 x 1.125	1.124	---	.375	---	.500	2.000	3/8	.375	1.500	1.000	.312	.438	.250	---	3.625	1.750	2.335	1.428	---	---	2.000	1.000	.250	4.000	1.000	1.875	4.125	5.062
	1.000	3/4"-16 x 1.125	1"-14 x 1.125	7/8"-14 x 1.125	7/8"-14 x 1.875	1.499		.500		.875																				1.375	2.250	4.500	5.437
2.000	.625	7/16"-20 x .750	5/8"-18 x .750	1/2"-20 x .750	1/2"-20 x 1.125	1.124	---	.375	---	.500	2.500	3/8	.375	1.500	1.000	.344	.500	.312	---	3.625	2.250	2.335	1.838	---	---	2.500	1.000	.312	4.500	1.000	1.875	4.125	5.094
	1.000	3/4"-16 x 1.125	1"-14 x 1.125	7/8"-14 x 1.125	7/8"-14 x 1.875	1.499		.500		.875																				1.375	2.250	4.500	5.469
	1.375	1"-14 x 1.625	1 3/8"-12 x 1.625	1 1/4"-12 x 1.625	1 1/4"-12 x 2.500	1.999		.625		1.125																				1.625	2.500	4.750	5.719
2.500	.625	7/16"-20 x .750	5/8"-18 x .750	1/2"-20 x .750	1/2"-20 x 1.125	1.124	---	.375	---	.500	3.000	3/8	.375	1.500	1.000	.344	.500	.312	---	3.750	2.750	2.460	2.192	---	---	3.000	1.000	.312	5.000	1.000	1.875	4.250	5.219
	1.000	3/4"-16 x 1.125	1"-14 x 1.125	7/8"-14 x 1.125	7/8"-14 x 1.875	1.499		.500		.875																				1.375	2.250	4.625	5.594
	1.375	1"-14 x 1.625	1 3/8"-12 x 1.625	1 1/4"-12 x 1.625	1 1/4"-12 x 2.500	1.999		.625		1.125																				1.625	2.500	4.875	5.844
	1.750	1 1/4"-12 x 2.000	1 3/4"-12 x 2.000	1 1/2"-12 x 2.000	1 1/2"-12 x 3.000	2.374		.750		1.500																				1.875	2.750	5.125	6.094
3.250	1.000	3/4"-16 x 1.125	1"-14 x 1.125	7/8"-14 x 1.125	7/8"-14 x 1.875	1.499	---	.500	---	.875	3.750	1/2	.625	1.750	1.250	.438	.562	.375	---	4.250	3.500	2.750	2.758	---	---	3.750	1.000	.375	5.750	1.375	2.375	5.000	6.188
	1.375	1"-14 x 1.625	1 3/8"-12 x 1.625	1 1/4"-12 x 1.625	1 1/4"-12 x 2.500	1.999		.625		1.125																				1.625	2.625	5.250	6.438
	1.750	1 1/4"-12 x 2.000	1 3/4"-12 x 2.000	1 1/2"-12 x 2.000	1 1/2"-12 x 3.000	2.374		.750		1.500																				1.875	2.875	5.500	6.688
	2.000	1 1/2"-12 x 2.250	2"-12 x 2.250	1 3/4"-12 x 2.250	1 3/4"-12 x 3.500	2.624		.875		1.688																				2.000	3.000	5.625	6.813
4.000	1.000	3/4"-16 x 1.125	1"-14 x 1.125	7/8"-14 x 1.125	7/8"-14 x 1.875	1.499	2.562	.500	.250	.875	4.500	1/2	.625	1.750	1.250	.438	.562	---	.375	4.250	4.250	2.750	3.323	2.969	2.500	4.500	1.000	.375	6.500	1.375	2.375	5.000	6.188
	1.375	1"-14 x 1.625	1 3/8"-12 x 1.625	1 1/4"-12 x 1.625	1 1/4"-12 x 2.500	1.999	2.562	.625	.250	1.125								---	.375					2.969	2.500					1.625	2.625	5.250	6.438
	1.750	1 1/4"-12 x 2.000	1 3/4"-12 x 2.000	1 1/2"-12 x 2.000	1 1/2"-12 x 3.000	2.374	3.267	.750	.312	1.500								---	.375					3.734	3.000					1.875	2.875	5.500	6.688
	2.000	1 1/2"-12 x 2.250	2"-12 x 2.250	1 3/4"-12 x 2.250	1 3/4"-12 x 3.500	2.624	---	.875	---	1.688								.375	---					---	---					2.000	3.000	5.625	6.813
	2.500	1 7/8"-12 x 3.000	2 1/2"-12 x 3.000	2 1/4"-12 x 3.000	2 1/4"-12 x 4.500	3.124	---	1.000	---	2.062								.375	---					---	---					2.250	3.250	5.875	7.063
5.000	1.000	3/4"-16 x 1.125	1"-14 x 1.125	7/8"-14 x 1.125	7/8"-14 x 1.875	1.499	2.562	.500	.250	.875	5.500	1/2	.625	1.750	1.250	.594	.750	---	.500	4.500	5.250	3.000	4.101	2.969	2.500	5.500	1.000	.500	7.500	1.375	2.375	5.250	6.594
	1.375	1"-14 x 1.625	1 3/8"-12 x 1.625	1 1/4"-12 x 1.625	1 1/4"-12 x 2.500	1.999	2.562	.625	.250	1.125								---	.500					2.969	2.500					1.625	2.625	5.500	6.844
	1.750	1 1/4"-12 x 2.000	1 3/4"-12 x 2.000	1 1/2"-12 x 2.000	1 1/2"-12 x 3.000	2.374	3.267	.750	.312	1.500								---	.500					3.734	3.000					1.875	2.875	5.750	7.094
	2.000	1 1/2"-12 x 2.250	2"-12 x 2.250	1 3/4"-12 x 2.250	1 3/4"-12 x 3.500	2.624	3.812	.875	.312	1.688								---	.500					4.312	3.750					2.000	3.000	5.875	7.219
	2.500	1 7/8"-12 x 3.000	2 1/2"-12 x 3.000	2 1/4"-12 x 3.000	2 1/4"-12 x 4.500	3.124	3.812	1.000	.312	2.062								---	.500					4.312	3.750					2.250	3.250	6.125	7.469
	3.000	2 1/4"-12 x 3.500	3"-12 x 3.500	2 3/4"-12 x 3.500	2 3/4"-12 x 5.500	3.749	---	1.000	---	2.625								.500	---					---	---					2.250	3.250	6.125	7.469
	3.500	2 1/2"-12 x 3.500	3 1/2"-12 x 3.500	3 1/4"-12 x 3.500	3 1/4"-12 x 6.500	4.249	---	1.000	---	3.000								.500	---					---	---					2.250	3.250	6.125	7.469
6.000	1.375	1"-14 x 1.625	1 3/8"-12 x 1.625	1 1/4"-12 x 1.625	1 1/4"-12 x 2.500	1.999	3.267	.625	.312	1.125	6.500	3/4	.625	2.000	1.500	.594	.750	---	.500	5.000	6.250	3.250	4.879	3.734	3.000	6.500	1.375	.500	9.250	1.625	2.750	5.875	7.344
	1.750	1 1/4"-12 x 2.000	1 3/4"-12 x 2.000	1 1/2"-12 x 2.000	1 1/2"-12 x 3.000	2.374	3.267	.750	.312	1.500			.625					---	.500					3.734	3.000					1.875	3.000	6.125	7.594
	2.000	1 1/2"-12 x 2.250	2"-12 x 2.250	1 3/4"-12 x 2.250	1 3/4"-12 x 3.500	2.624	3.812	.875	.312	1.688			.625					---	.500					4.312	3.750					2.000	3.125	6.250	7.719
	2.500	1 7/8"-12 x 3.000	2 1/2"-12 x 3.000	2 1/4"-12 x 3.000	2 1/4"-12 x 4.500	3.124	3.812	1.000	.312	2.062			.625					---	.500					4.312	3.750					2.250	3.375	6.500	7.969
	3.000	2 1/4"-12 x 3.500	3"-12 x 3.500	2 3/4"-12 x 3.500	2 3/4"-12 x 5.500	3.749	4.700	1.000	.375	2.625			.625					---	.500					5.562	4.500					2.250	3.375	6.500	7.969
	3.500	2 1/2"-12 x 3.500	3 1/2"-12 x 3.500	3 1/4"-12 x 3.500	3 1/4"-12 x 6.500	4.249	5.200	1.000	.375	3.000			.625					---	.500					6.062	5.000					2.250	3.375	6.500	7.969
	4.000	3"-12 x 4.000	4"-12 x 4.000	3 3/4"-12 x 4.000	3 3/4"-12 x 7.500	4.749	---	1.000	---	3.375			.750					.500	---					---	---					2.250	3.375	6.500	7.969
BORE	MM	KM & KF	KD	KI	KA	B	BC	C	CS	D	E	EE	F	G	J	K	KN	KS	KU	LB	OD	P	R	RR	RS	TC	TD	TR	UT	WB	Y	XJ	ZB

NEVA DESIGN

2.07

FILE: 2.07_LM07S2.dwg REV: 02/09/2010

27650 Groesbeck Hwy • Roseville, MI 48066-2759 • Phone 586.775.7211 • Fax 586.775.4545 • Toll Free 800.526.7968 • e-mail: sales@peninsularcylinders.com • www.peninsularcylinders.com

CAP TRUNNION

Medium Duty Aluminum Air Cylinder

Peninsular Mounting Style: **LM 7**

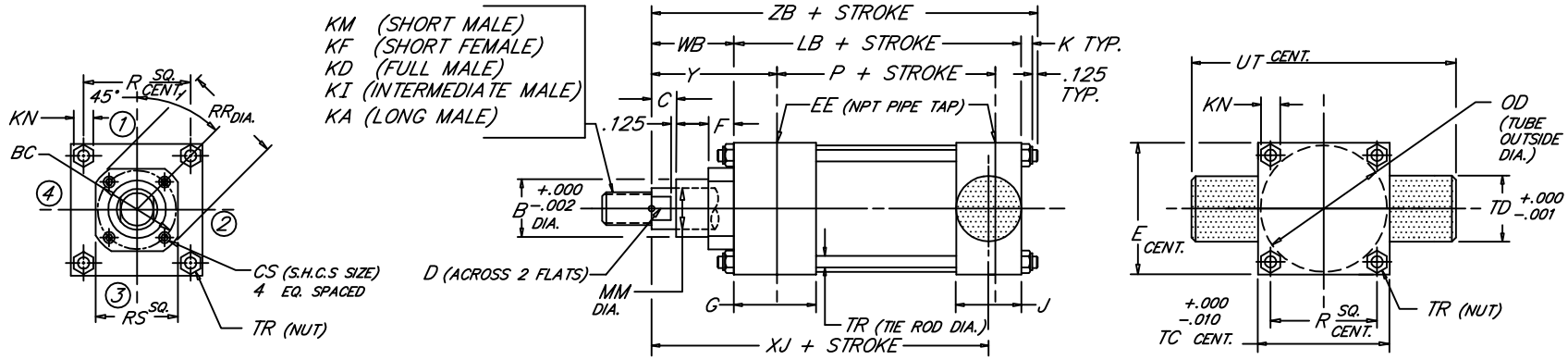

BORE	ROD MM	ROD THREAD X LENGTH KM & KF	KD	KI	KA	B	BC	C	CS	D	E	NPT EE	F	G	J	K	KN	LB	OD	P	R	RR	RS	TC	TD	TR	UT	WB	XJ	Y	ZB
8.000	1.375	1"-14 x 1.625	1 3/8"-12 x 1.625	1 1/4"-12 x 1.625	1 1/4"-12 x 2.500	1.999	3.267	.625	.312	1.125												3.734	3.000					1.625	6.000	2.750	7.625
	1.750	1 1/4"-12 x 2.000	1 3/4"-12 x 2.000	1 1/2"-12 x 2.000	1 1/2"-12 x 3.000	2.374	3.267	.750	.312	1.500												3.734	3.000					1.875	6.250	3.000	7.875
	2.000	1 1/2"-12 x 2.250	2"-12 x 2.250	1 3/4"-12 x 2.250	1 3/4"-12 x 3.500	2.624	3.812	.875	.312	1.688												4.312	3.750					2.000	6.375	3.125	8.000
	2.500	1 7/8"-12 x 3.000	2 1/2"-12 x 3.000	2 1/4"-12 x 3.000	2 1/4"-12 x 4.500	3.124	3.812	1.000	.312	2.062												4.312	3.750					2.250	6.625	3.375	8.250
	3.000	2 1/4"-12 x 3.500	3"-12 x 3.500	2 3/4"-12 x 3.500	2 3/4"-12 x 5.500	3.749	4.700	1.000	.375	2.625												5.562	4.500					2.250	6.625	3.375	8.250
	3.500	2 1/2"-12 x 3.500	3 1/2"-12 x 3.500	3 1/4"-12 x 3.500	3 1/4"-12 x 6.500	4.249	5.200	1.000	.375	3.000	8.500	3/4	.625	2.000	1.500	.750	.938	5.125	8.450	3.375	6.435	6.062	5.000	8.500	1.375	.625	11.250	2.250	6.625	3.375	8.250
	4.000	3"-12 x 4.000	4"-12 x 4.000	3 3/4"-12 x 4.000	3 3/4"-12 x 7.500	4.749	5.700	1.000	.375	3.375												6.562	5.500					2.250	6.625	3.375	8.250
	4.500	3 1/4"-12 x 4.500	4 1/2"-12 x 4.500	4 1/4"-12 x 4.500	4 1/4"-12 x 8.250	5.249	6.200	1.000	.375	3.875												7.062	6.000					2.250	6.625	3.375	8.250
	5.000	3 1/2"-12 x 5.000	5"-12 x 5.000	4 3/4"-12 x 5.000	4 3/4"-12 x 9.000	5.749	6.700	1.000	.375	4.250												7.562	6.500					2.250	6.625	3.375	8.250
	5.500	4"-12 x 5.500	5 1/2"-12 x 5.500	5 1/4"-12 x 5.500	5 1/4"-12 x 10.000	6.249	7.125	1.000	.375	4.625												7.938	7.000					2.250	6.625	3.375	8.250
10.000	1.750	1 1/4"-12 x 2.000	1 3/4"-12 x 2.000	1 1/2"-12 x 2.000	1 1/2"-12 x 3.000	2.374	3.812	.750	.312	1.500												4.312	3.750					1.875	7.250	3.062	9.250
	2.000	1 1/2"-12 x 2.250	2"-12 x 2.250	1 3/4"-12 x 2.250	1 3/4"-12 x 3.500	2.624	3.812	.875	.312	1.688												4.312	3.750					2.000	7.375	3.187	9.375
	2.500	1 7/8"-12 x 3.000	2 1/2"-12 x 3.000	2 1/4"-12 x 3.000	2 1/4"-12 x 4.500	3.124	3.812	1.000	.312	2.062												4.312	3.750					2.250	7.625	3.437	9.625
	3.000	2 1/4"-12 x 3.500	3"-12 x 3.500	2 3/4"-12 x 3.500	2 3/4"-12 x 5.500	3.749	4.700	1.000	.375	2.625												5.562	4.500					2.250	7.625	3.437	9.625
	3.500	2 1/2"-12 x 3.500	3 1/2"-12 x 3.500	3 1/4"-12 x 3.500	3 1/4"-12 x 6.500	4.249	5.200	1.000	.375	3.000	10.625	1	.625	2.250	2.000	.875	1.062	6.375	10.450	4.250	7.920	6.062	5.000	10.625	1.750	.750	14.125	2.250	7.625	3.437	9.625
	4.000	3"-12 x 4.000	4"-12 x 4.000	3 3/4"-12 x 4.000	3 3/4"-12 x 7.500	4.749	5.700	1.000	.375	3.375												6.562	5.500					2.250	7.625	3.437	9.625
	4.500	3 1/4"-12 x 4.500	4 1/2"-12 x 4.500	4 1/4"-12 x 4.500	4 1/4"-12 x 8.250	5.249	6.200	1.000	.375	3.875												7.062	6.000					2.250	7.625	3.437	9.625
	5.000	3 1/2"-12 x 5.000	5"-12 x 5.000	4 3/4"-12 x 5.000	4 3/4"-12 x 9.000	5.749	6.700	1.000	.375	4.250												7.562	6.500					2.250	7.625	3.437	9.625
	5.500	4"-12 x 5.500	5 1/2"-12 x 5.500	5 1/4"-12 x 5.500	5 1/4"-12 x 10.000	6.249	7.125	1.000	.375	4.625												7.938	7.000					2.250	7.625	3.437	9.625
12.000	2.000	1 1/2"-12 x 2.250	2"-12 x 2.250	1 3/4"-12 x 2.250	1 3/4"-12 x 3.500	2.624	3.812	.875	.312	1.688												4.312	3.750					2.000	7.875	3.187	9.875
	2.500	1 7/8"-12 x 3.000	2 1/2"-12 x 3.000	2 1/4"-12 x 3.000	2 1/4"-12 x 4.500	3.124	3.812	1.000	.312	2.062												4.312	3.750					2.250	8.125	3.437	10.125
	3.000	2 1/4"-12 x 3.500	3"-12 x 3.500	2 3/4"-12 x 3.500	2 3/4"-12 x 5.500	3.749	4.700	1.000	.375	2.625												5.562	4.500					2.250	8.125	3.437	10.125
	3.500	2 1/2"-12 x 3.500	3 1/2"-12 x 3.500	3 1/4"-12 x 3.500	3 1/4"-12 x 6.500	4.249	5.200	1.000	.375	3.000	12.750	1	.625	2.250	2.000	.875	1.062	6.875	12.450	4.750	9.405	6.062	5.000	12.750	1.750	.750	16.250	2.250	8.125	3.437	10.125
	4.000	3"-12 x 4.000	4"-12 x 4.000	3 3/4"-12 x 4.000	3 3/4"-12 x 7.500	4.749	5.700	1.000	.375	3.375												6.562	5.500					2.250	8.125	3.437	10.125
	4.500	3 1/4"-12 x 4.500	4 1/2"-12 x 4.500	4 1/4"-12 x 4.500	4 1/4"-12 x 8.250	5.249	6.200	1.000	.375	3.875												7.062	6.000					2.250	8.125	3.437	10.125
	5.000	3 1/2"-12 x 5.000	5"-12 x 5.000	4 3/4"-12 x 5.000	4 3/4"-12 x 9.000	5.749	6.700	1.000	.375	4.250												7.562	6.500					2.250	8.125	3.437	10.125
	5.500	4"-12 x 5.500	5 1/2"-12 x 5.500	5 1/4"-12 x 5.500	5 1/4"-12 x 10.000	6.249	7.125	1.000	.375	4.625												7.938	7.000					2.250	8.125	3.437	10.125
14.000	2.500	1 7/8"-12 x 3.000	2 1/2"-12 x 3.000	2 1/4"-12 x 3.000	2 1/4"-12 x 4.500	3.124	3.812		.312	2.062												4.312	3.750								
	3.000	2 1/4"-12 x 3.500	3"-12 x 3.500	2 3/4"-12 x 3.500	2 3/4"-12 x 5.500	3.749	4.700		.375	2.625												5.562	4.500								
	3.500	2 1/2"-12 x 3.500	3 1/2"-12 x 3.500	3 1/4"-12 x 3.500	3 1/4"-12 x 6.500	4.249	5.200		.375	3.000												6.062	5.000								
	4.000	3"-12 x 4.000	4"-12 x 4.000	3 3/4"-12 x 4.000	3 3/4"-12 x 7.500	4.749	5.700	1.000	.375	3.375	14.750	1 1/4	.625	2.750	2.250	1.000	1.250	8.125	14.450	5.625	10.889	6.562	5.500	14.750	2.000	.875	18.750	2.250	9.250	3.688	11.500
	4.500	3 1/4"-12 x 4.500	4 1/2"-12 x 4.500	4 1/4"-12 x 4.500	4 1/4"-12 x 8.250	5.249	6.200		.375	3.875												7.062	6.000								
	5.000	3 1/2"-12 x 5.000	5"-12 x 5.000	4 3/4"-12 x 5.000	4 3/4"-12 x 9.000	5.749	6.700		.375	4.250												7.562	6.500								
	5.500	4"-12 x 5.500	5 1/2"-12 x 5.500	5 1/4"-12 x 5.500	5 1/4"-12 x 10.000	6.249	7.125		.375	4.625												7.938	7.000								
BORE	MM	KM & KF	KD	KI	KA	B	BC	C	CS	D	E	EE	F	G	J	K	KN	LB	OD	P	R	RR	RS	TC	TD	TR	UT	WB	XJ	Y	ZB

NEVA DESIGN

FILE: 2.07_LM07L2.dwg REV: 02/09/2010

27650 Groesbeck Hwy • Roseville, MI 48066-2759 • Phone 586.775.7211 • Fax 586.775.4545 • Toll Free 800.526.7968 • e-mail: sales@peninsularcylinders.com • www.peninsularcylinders.com

HEAD TIE ROD EXTENDED

Peninsular Mounting Style: **LM 8**

Medium Duty Aluminum Air Cylinder

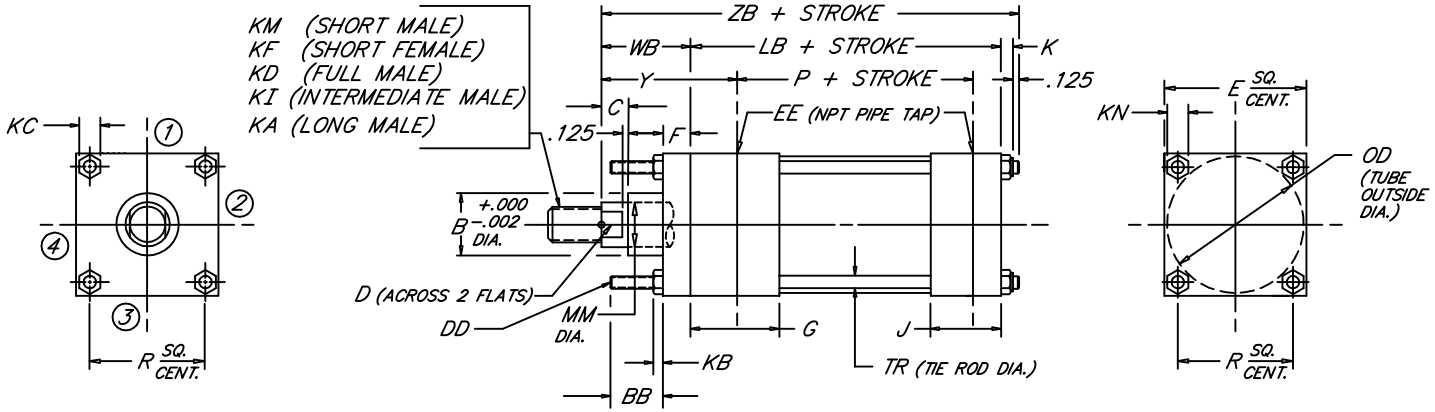

BORE	MM	ROD KM & KF	ROD THREAD X LENGTH KD	KI	KA	B	BB	C	D	DD	E	NPT EE	F	G	J	K	KB	KC	KN	LB	OD	P	R	TR	WB	Y	ZB
1.500	.625	7/16"-20 x .750	5/8"-18 x .750	1/2"-20 x .750	1/2"-20 x 1.125	1.124	1.000	.375	.500	1/4"-28	2.000	3/8	.375	1.500	1.000	.312	.218	.438	.438	3.625	1.750	2.335	1.428	.250	1.000	1.875	5.062
	1.000	3/4"-16 x 1.125	1"-14 x 1.125	7/8"-14 x 1.125	7/8"-14 x 1.875	1.499		.500	.875																1.375	2.250	5.437
2.000	.625	7/16"-20 x .750	5/8"-18 x .750	1/2"-20 x .750	1/2"-20 x 1.125	1.124	1.125	.375	.500	5/16"-24	2.500	3/8	.375	1.500	1.000	.344	.250	.500	.500	3.625	2.250	2.335	1.838	.312	1.000	1.875	5.094
	1.000	3/4"-16 x 1.125	1"-14 x 1.125	7/8"-14 x 1.125	7/8"-14 x 1.875	1.499		.500	.875																1.375	2.250	5.469
	1.375	1"-14 x 1.625	1 3/8"-12 x 1.625	1 1/4"-12 x 1.625	1 1/4"-12 x 2.500	1.999		.625	1.125																1.625	2.500	5.719
2.500	.625	7/16"-20 x .750	5/8"-18 x .750	1/2"-20 x .750	1/2"-20 x 1.125	1.124	1.125	.375	.500	5/16"-24	3.000	3/8	.375	1.500	1.000	.344	.250	.500	.500	3.750	2.750	2.460	2.192	.312	1.000	1.875	5.219
	1.000	3/4"-16 x 1.125	1"-14 x 1.125	7/8"-14 x 1.125	7/8"-14 x 1.875	1.499		.500	.875																1.375	2.250	5.594
	1.375	1"-14 x 1.625	1 3/8"-12 x 1.625	1 1/4"-12 x 1.625	1 1/4"-12 x 2.500	1.999		.625	1.125																1.625	2.500	5.844
	1.750	1 1/4"-12 x 2.000	1 3/4"-12 x 2.000	1 1/2"-12 x 2.000	1 1/2"-12 x 3.000	2.374		.750	1.500																1.875	2.750	6.094
3.250	1.000	3/4"-16 x 1.125	1"-14 x 1.125	7/8"-14 x 1.125	7/8"-14 x 1.875	1.499	1.375	.500	.875	3/8"-24	3.750	1/2	.625	1.750	1.250	.438	.328	.562	.562	4.250	3.500	2.750	2.758	.375	1.375	2.375	6.188
	1.375	1"-14 x 1.625	1 3/8"-12 x 1.625	1 1/4"-12 x 1.625	1 1/4"-12 x 2.500	1.999		.625	1.125																1.625	2.625	6.438
	1.750	1 1/4"-12 x 2.000	1 3/4"-12 x 2.000	1 1/2"-12 x 2.000	1 1/2"-12 x 3.000	2.374		.750	1.500																1.875	2.875	6.688
	2.000	1 1/2"-12 x 2.250	2"-12 x 2.250	1 3/4"-12 x 2.250	1 3/4"-12 x 3.500	2.624		.875	1.688																2.000	3.000	6.813
4.000	1.000	3/4"-16 x 1.125	1"-14 x 1.125	7/8"-14 x 1.125	7/8"-14 x 1.875	1.499	1.375	.500	.875	3/8"-24	4.500	1/2	.625	1.750	1.250	.438	.328	.562	.562	4.250	4.250	2.750	3.323	.375	1.375	2.375	6.188
	1.375	1"-14 x 1.625	1 3/8"-12 x 1.625	1 1/4"-12 x 1.625	1 1/4"-12 x 2.500	1.999		.625	1.125																1.625	2.625	6.438
	1.750	1 1/4"-12 x 2.000	1 3/4"-12 x 2.000	1 1/2"-12 x 2.000	1 1/2"-12 x 3.000	2.374		.750	1.500																1.875	2.875	6.688
	2.000	1 1/2"-12 x 2.250	2"-12 x 2.250	1 3/4"-12 x 2.250	1 3/4"-12 x 3.500	2.624		.875	1.688																2.000	3.000	6.813
	2.500	1 7/8"-12 x 3.000	2 1/2"-12 x 3.000	2 1/4"-12 x 3.000	2 1/4"-12 x 4.500	3.124		1.000	2.062																2.250	3.250	7.063
5.000	1.000	3/4"-16 x 1.125	1"-14 x 1.125	7/8"-14 x 1.125	7/8"-14 x 1.875	1.499	1.812	.500	.875	1/2"-20	5.500	1/2	.625	1.750	1.250	.594	.438	.750	.750	4.500	5.250	3.000	4.101	.500	1.375	2.375	6.594
	1.375	1"-14 x 1.625	1 3/8"-12 x 1.625	1 1/4"-12 x 1.625	1 1/4"-12 x 2.500	1.999		.625	1.125																1.625	2.625	6.844
	1.750	1 1/4"-12 x 2.000	1 3/4"-12 x 2.000	1 1/2"-12 x 2.000	1 1/2"-12 x 3.000	2.374		.750	1.500																1.875	2.875	7.094
	2.000	1 1/2"-12 x 2.250	2"-12 x 2.250	1 3/4"-12 x 2.250	1 3/4"-12 x 3.500	2.624		.875	1.688																2.000	3.000	7.219
	2.500	1 7/8"-12 x 3.000	2 1/2"-12 x 3.000	2 1/4"-12 x 3.000	2 1/4"-12 x 4.500	3.124		1.000	2.062																2.250	3.250	7.469
	3.000	2 1/4"-12 x 3.500	3"-12 x 3.500	2 3/4"-12 x 3.500	2 3/4"-12 x 5.500	3.749		1.000	2.625																2.250	3.250	7.469
	3.500	2 1/2"-12 x 3.500	3 1/2"-12 x 3.500	3 1/4"-12 x 3.500	3 1/4"-12 x 6.500	4.249		1.000	3.000																2.250	3.250	7.469
6.000	1.375	1"-14 x 1.625	1 3/8"-12 x 1.625	1 1/4"-12 x 1.625	1 1/4"-12 x 2.500	1.999	1.812	.625	1.125	1/2"-20	6.500	3/4	.750	2.000	1.500	.594	.438	.750	.750	5.000	6.250	3.250	4.879	.500	1.625	2.750	7.344
	1.750	1 1/4"-12 x 2.000	1 3/4"-12 x 2.000	1 1/2"-12 x 2.000	1 1/2"-12 x 3.000	2.374		.750	1.500																1.875	3.000	7.594
	2.000	1 1/2"-12 x 2.250	2"-12 x 2.250	1 3/4"-12 x 2.250	1 3/4"-12 x 3.500	2.624		.875	1.688																2.000	3.125	7.719
	2.500	1 7/8"-12 x 3.000	2 1/2"-12 x 3.000	2 1/4"-12 x 3.000	2 1/4"-12 x 4.500	3.124		1.000	2.062																2.250	3.375	7.969
	3.000	2 1/4"-12 x 3.500	3"-12 x 3.500	2 3/4"-12 x 3.500	2 3/4"-12 x 5.500	3.749		1.000	2.625																2.250	3.375	7.969
	3.500	2 1/2"-12 x 3.500	3 1/2"-12 x 3.500	3 1/4"-12 x 3.500	3 1/4"-12 x 6.500	4.249		1.000	3.000																2.250	3.375	7.969
	4.000	3"-12 x 4.000	4"-12 x 4.000	3 3/4"-12 x 4.000	3 3/4"-12 x 7.500	4.749		1.000	3.375																2.250	3.375	7.969
BORE	MM	KM & KF	KD	KI	KA	B	BB	C	D	DD	E	EE	F	G	J	K	KB	KC	KN	LB	OD	P	R	TR	WB	Y	ZB

NEVA DESIGN

2.08

FILE: 2.08_LM08S2.dwg REV: 02/09/2010

27650 Groesbeck Hwy • Roseville, MI 48066-2759 • Phone 586.775.7211 • Fax 586.775.4545 • Toll Free 800.526.7968 • e-mail: sales@peninsularcylinders.com • www.peninsularcylinders.com

HEAD TIE ROD EXTENDED

Peninsular Mounting Style: **LM 8**

Medium Duty Aluminum Air Cylinder

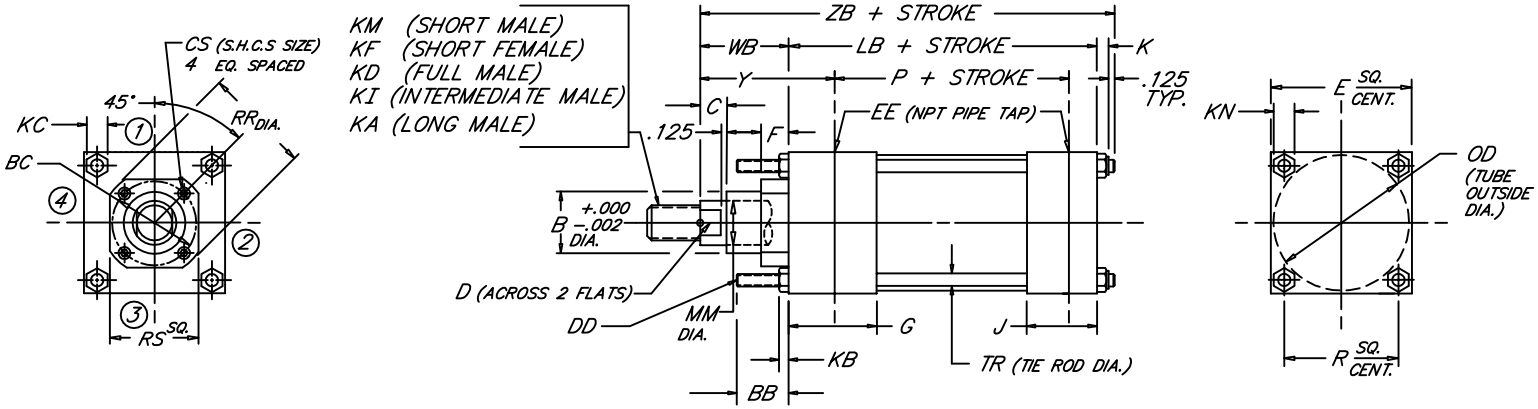

BORE	ROD MM	ROD THREAD X LENGTH KM & KF	KD	KI	KA	B	BB	BC	C	CS	D	DD	E	NPT EE	F	G	J	K	KB	KC	KN	LB	OD	P	R	RR	RS	TR	WB	Y	ZB
8.000	1.375	1"-14 x 1.625	1 3/8"-12 x 1.625	1 1/4"-12 x 1.625	1 1/4"-12 x 2.500	1.999	2.312	3.267	.625	.312	1.125	5/8"-18	8.500	3/4	.625	2.000	1.500	.750	.531	.938	.938	5.125	8.450	3.375	6.435	3.734	3.000	.625	1.625	2.750	7.625
	1.750	1 1/4"-12 x 2.000	1 3/4"-12 x 2.000	1 1/2"-12 x 2.000	1 1/2"-12 x 3.000	2.374		3.267	.750	.312	1.500															3.734	3.000		1.875	3.000	7.875
	2.000	1 1/2"-12 x 2.250	2"-12 x 2.250	1 3/4"-12 x 2.250	1 3/4"-12 x 3.500	2.624		3.812	.875	.312	1.688															4.312	3.750		2.000	3.125	8.000
	2.500	1 7/8"-12 x 3.000	2 1/2"-12 x 3.000	2 1/4"-12 x 3.000	2 1/4"-12 x 4.500	3.124		3.812	1.000	.312	2.062															4.312	3.750		2.250	3.375	8.250
	3.000	2 1/4"-12 x 3.500	3"-12 x 3.500	2 3/4"-12 x 3.500	2 3/4"-12 x 5.500	3.749		4.700	1.000	.375	2.625															5.562	4.500		2.250	3.375	8.250
	3.500	2 1/2"-12 x 3.500	3 1/2"-12 x 3.500	3 1/4"-12 x 3.500	3 1/4"-12 x 6.500	4.249		5.200	1.000	.375	3.000															6.062	5.000		2.250	3.375	8.250
	4.000	3"-12 x 4.000	4"-12 x 4.000	3 3/4"-12 x 4.000	3 3/4"-12 x 7.500	4.749		5.700	1.000	.375	3.375															6.562	5.500		2.250	3.375	8.250
	4.500	3 1/4"-12 x 4.500	4 1/2"-12 x 4.500	4 1/4"-12 x 4.500	4 1/4"-12 x 8.250	5.249		6.200	1.000	.375	3.875															7.062	6.000		2.250	3.375	8.250
	5.000	3 1/2"-12 x 5.000	5"-12 x 5.000	4 3/4"-12 x 5.000	4 3/4"-12 x 9.000	5.749		6.700	1.000	.375	4.250															7.562	6.500		2.250	3.375	8.250
	5.500	4"-12 x 5.500	5 1/2"-12 x 5.500	5 1/4"-12 x 5.500	5 1/4"-12 x 10.000	6.249		7.125	1.000	.375	4.625															7.938	7.000		2.250	3.375	8.250
10.000	1.750	1 1/4"-12 x 2.000	1 3/4"-12 x 2.000	1 1/2"-12 x 2.000	1 1/2"-12 x 3.000	2.374	2.688	3.812	.750	.312	1.500	3/4"-16	10.625	1	.625	2.250	2.000	.875	.625	1.094	1.062	6.375	10.450	4.250	7.920	4.312	3.750	.750	1.875	3.062	9.250
	2.000	1 1/2"-12 x 2.250	2"-12 x 2.250	1 3/4"-12 x 2.250	1 3/4"-12 x 3.500	2.624		3.812	.875	.312	1.688															4.312	3.750		2.000	3.187	9.375
	2.500	1 7/8"-12 x 3.000	2 1/2"-12 x 3.000	2 1/4"-12 x 3.000	2 1/4"-12 x 4.500	3.124		3.812	1.000	.312	2.062															4.312	3.750		2.250	3.437	9.625
	3.000	2 1/4"-12 x 3.500	3"-12 x 3.500	2 3/4"-12 x 3.500	2 3/4"-12 x 5.500	3.749		4.700	1.000	.375	2.625															5.562	4.500		2.250	3.437	9.625
	3.500	2 1/2"-12 x 3.500	3 1/2"-12 x 3.500	3 1/4"-12 x 3.500	3 1/4"-12 x 6.500	4.249		5.200	1.000	.375	3.000															6.062	5.000		2.250	3.437	9.625
	4.000	3"-12 x 4.000	4"-12 x 4.000	3 3/4"-12 x 4.000	3 3/4"-12 x 7.500	4.749		5.700	1.000	.375	3.375															6.562	5.500		2.250	3.437	9.625
	4.500	3 1/4"-12 x 4.500	4 1/2"-12 x 4.500	4 1/4"-12 x 4.500	4 1/4"-12 x 8.250	5.249		6.200	1.000	.375	3.875															7.062	6.000		2.250	3.437	9.625
	5.000	3 1/2"-12 x 5.000	5"-12 x 5.000	4 3/4"-12 x 5.000	4 3/4"-12 x 9.000	5.749		6.700	1.000	.375	4.250															7.562	6.500		2.250	3.437	9.625
	5.500	4"-12 x 5.500	5 1/2"-12 x 5.500	5 1/4"-12 x 5.500	5 1/4"-12 x 10.000	6.249		7.125	1.000	.375	4.625															7.938	7.000		2.250	3.437	9.625
12.000	2.000	1 1/2"-12 x 2.250	2"-12 x 2.250	1 3/4"-12 x 2.250	1 3/4"-12 x 3.500	2.624	2.688	3.812	.875	.312	1.688	3/4"-16	12.750	1	.625	2.250	2.000	.875	.625	1.094	1.062	6.875	12.450	4.750	9.405	4.312	3.750	.750	2.000	3.187	9.875
	2.500	1 7/8"-12 x 3.000	2 1/2"-12 x 3.000	2 1/4"-12 x 3.000	2 1/4"-12 x 4.500	3.124		3.812	1.000	.312	2.062															4.312	3.750		2.250	3.437	10.125
	3.000	2 1/4"-12 x 3.500	3"-12 x 3.500	2 3/4"-12 x 3.500	2 3/4"-12 x 5.500	3.749		4.700	1.000	.375	2.625															5.562	4.500		2.250	3.437	10.125
	3.500	2 1/2"-12 x 3.500	3 1/2"-12 x 3.500	3 1/4"-12 x 3.500	3 1/4"-12 x 6.500	4.249		5.200	1.000	.375	3.000															6.062	5.000		2.250	3.437	10.125
	4.000	3"-12 x 4.000	4"-12 x 4.000	3 3/4"-12 x 4.000	3 3/4"-12 x 7.500	4.749		5.700	1.000	.375	3.375															6.562	5.500		2.250	3.437	10.125
	4.500	3 1/4"-12 x 4.500	4 1/2"-12 x 4.500	4 1/4"-12 x 4.500	4 1/4"-12 x 8.250	5.249		6.200	1.000	.375	3.875															7.062	6.000		2.250	3.437	10.125
	5.000	3 1/2"-12 x 5.000	5"-12 x 5.000	4 3/4"-12 x 5.000	4 3/4"-12 x 9.000	5.749		6.700	1.000	.375	4.250															7.562	6.500		2.250	3.437	10.125
	5.500	4"-12 x 5.500	5 1/2"-12 x 5.500	5 1/4"-12 x 5.500	5 1/4"-12 x 10.000	6.249		7.125	1.000	.375	4.625															7.938	7.000		2.250	3.437	10.125
14.000	2.500	1 7/8"-12 x 3.000	2 1/2"-12 x 3.000	2 1/4"-12 x 3.000	2 1/4"-12 x 4.500	3.124	3.188	3.812		.312	2.062	7/8"-14	14.750	1 1/4	.625	2.750	2.250	1.000	.750	1.281	1.250	8.125	14.450	5.625	10.889	4.312	3.750	.875	2.250	3.688	11.500
	3.000	2 1/4"-12 x 3.500	3"-12 x 3.500	2 3/4"-12 x 3.500	2 3/4"-12 x 5.500	3.749		4.700		.375	2.625															5.562	4.500				
	3.500	2 1/2"-12 x 3.500	3 1/2"-12 x 3.500	3 1/4"-12 x 3.500	3 1/4"-12 x 6.500	4.249		5.200		.375	3.000															6.062	5.000				
	4.000	3"-12 x 4.000	4"-12 x 4.000	3 3/4"-12 x 4.000	3 3/4"-12 x 7.500	4.749		5.700	1.000	.375	3.375															6.562	5.500				
	4.500	3 1/4"-12 x 4.500	4 1/2"-12 x 4.500	4 1/4"-12 x 4.500	4 1/4"-12 x 8.250	5.249		6.200		.375	3.875															7.062	6.000				
	5.000	3 1/2"-12 x 5.000	5"-12 x 5.000	4 3/4"-12 x 5.000	4 3/4"-12 x 9.000	5.749		6.700		.375	4.250															7.562	6.500				
	5.500	4"-12 x 5.500	5 1/2"-12 x 5.500	5 1/4"-12 x 5.500	5 1/4"-12 x 10.000	6.249		7.125		.375	4.625															7.938	7.000				
BORE	MM	KM & KF	KD	KI	KA	B	BB	BC	C	CS	D	DD	E	EE	F	G	J	K	KB	KC	KN	LB	OD	P	R	RR	RS	TR	WB	Y	ZB

NEVA DESIGN

FILE: 2.08_LM08L2.dwg REV: 02/09/2010

27650 Groesbeck Hwy • Roseville, MI 48066-2759 • Phone 586.775.7211 • Fax 586.775.4545 • Toll Free 800.526.7968 • e-mail: sales@peninsularcylinders.com • www.peninsularcylinders.com

CAP TIE ROD EXTENDED

Medium Duty Aluminum Air Cylinder

Peninsular Mounting Style: **LM 11**

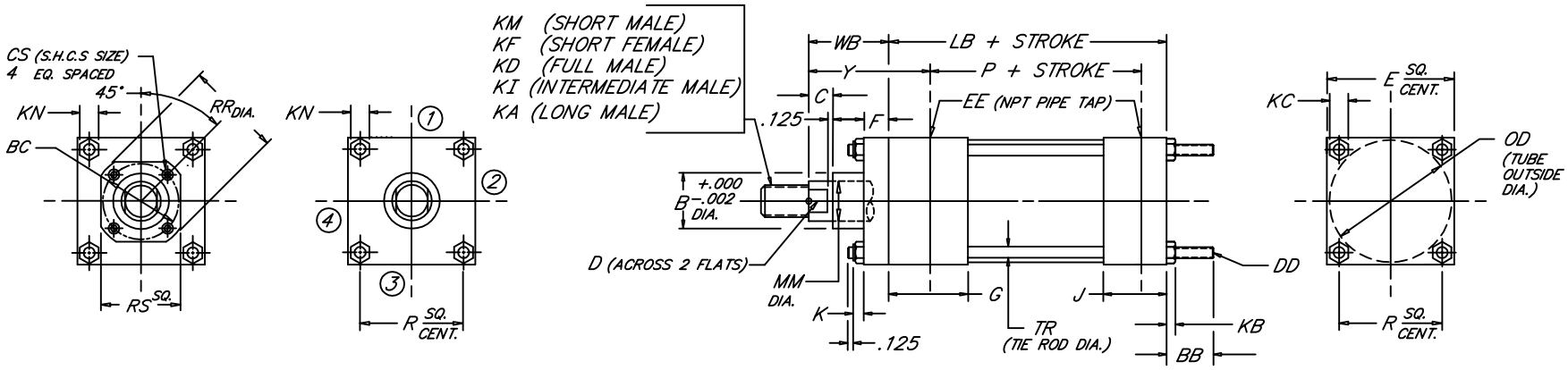

BORE	ROD MM	ROD THREAD X LENGTH KM & KF	KD	KI	KA	B	BB	BC	C	CS	D	DD	E	NPT EE	F	G	J	K	KB	KC	KN	LB	OD	P	R	RR	RS	TR	WB	Y
1.500	.625	7/16"-20 x .750	5/8"-18 x .750	1/2"-20 x .750	1/2"-20 x 1.125	1.124	1.000	---	.375	---	.500	1/4"-28	2.000	3/8	.375	1.500	1.000	.312	.218	.438	.438	3.625	1.750	2.335	1.428	---	---	.250	1.000	1.875
	1.000	3/4"-16 x 1.125	1"-14 x 1.125	7/8"-14 x 1.125	7/8"-14 x 1.875	1.499			.500		.875																		1.375	2.250
2.000	.625	7/16"-20 x .750	5/8"-18 x .750	1/2"-20 x .750	1/2"-20 x 1.125	1.124	1.125	---	.375	---	.500	5/16"-24	2.500	3/8	.375	1.500	1.000	.344	.250	.500	.500	3.625	2.250	2.335	1.838	---	---	.312	1.000	1.875
	1.000	3/4"-16 x 1.125	1"-14 x 1.125	7/8"-14 x 1.125	7/8"-14 x 1.875	1.499			.500		.875																		1.375	2.250
	1.375	1"-14 x 1.625	1 3/8"-12 x 1.625	1 1/4"-12 x 1.625	1 1/4"-12 x 2.500	1.999			.625		1.125																		1.625	2.500
2.500	.625	7/16"-20 x .750	5/8"-18 x .750	1/2"-20 x .750	1/2"-20 x 1.125	1.124	1.125	---	.375	---	.500	5/16"-24	3.000	3/8	.375	1.500	1.000	.344	.250	.500	.500	3.750	2.750	2.460	2.192	---	---	.312	1.000	1.875
	1.000	3/4"-16 x 1.125	1"-14 x 1.125	7/8"-14 x 1.125	7/8"-14 x 1.875	1.499			.500		.875																		1.375	2.250
	1.375	1"-14 x 1.625	1 3/8"-12 x 1.625	1 1/4"-12 x 1.625	1 1/4"-12 x 2.500	1.999			.625		1.125																		1.625	2.500
	1.750	1 1/4"-12 x 2.000	1 3/4"-12 x 2.000	1 1/2"-12 x 2.000	1 1/2"-12 x 3.000	2.374			.750		1.500																		1.875	2.750
3.250	1.000	3/4"-16 x 1.125	1"-14 x 1.125	7/8"-14 x 1.125	7/8"-14 x 1.875	1.499	1.375	---	.500	---	.875	3/8"-24	3.750	1/2	.625	1.750	1.250	.438	.328	.562	.562	4.250	3.500	2.750	2.758	---	---	.375	1.375	2.375
	1.375	1"-14 x 1.625	1 3/8"-12 x 1.625	1 1/4"-12 x 1.625	1 1/4"-12 x 2.500	1.999			.625		1.125																		1.625	2.625
	1.750	1 1/4"-12 x 2.000	1 3/4"-12 x 2.000	1 1/2"-12 x 2.000	1 1/2"-12 x 3.000	2.374			.750		1.500																		1.875	2.875
	2.000	1 1/2"-12 x 2.250	2"-12 x 2.250	1 3/4"-12 x 2.250	1 3/4"-12 x 3.500	2.624			.875		1.688																		2.000	3.000
4.000	1.000	3/4"-16 x 1.125	1"-14 x 1.125	7/8"-14 x 1.125	7/8"-14 x 1.875	1.499	1.375	2.562	.500	.250	.875	3/8"-24	4.500	1/2	.625	1.750	1.250	.438	.328	.562	.562	4.250	4.250	2.750	3.323	2.969	2.500	.375	1.375	2.375
	1.375	1"-14 x 1.625	1 3/8"-12 x 1.625	1 1/4"-12 x 1.625	1 1/4"-12 x 2.500	1.999		2.562	.625	.250	1.125															2.969	2.500		1.625	2.625
	1.750	1 1/4"-12 x 2.000	1 3/4"-12 x 2.000	1 1/2"-12 x 2.000	1 1/2"-12 x 3.000	2.374		3.267	.750	.312	1.500															3.734	3.000		1.875	2.875
	2.000	1 1/2"-12 x 2.250	2"-12 x 2.250	1 3/4"-12 x 2.250	1 3/4"-12 x 3.500	2.624		---	.875	---	1.688															---	---		2.000	3.000
	2.500	1 7/8"-12 x 3.000	2 1/2"-12 x 3.000	2 1/4"-12 x 3.000	2 1/4"-12 x 4.500	3.124		---	1.000	---	2.062															---	---		2.250	3.250
5.000	1.000	3/4"-16 x 1.125	1"-14 x 1.125	7/8"-14 x 1.125	7/8"-14 x 1.875	1.499	1.812	2.562	.500	.250	.875	1/2"-20	5.500	1/2	.625	1.750	1.250	.594	.438	.750	.750	4.500	5.250	3.000	4.101	2.969	2.500	.500	1.375	2.375
	1.375	1"-14 x 1.625	1 3/8"-12 x 1.625	1 1/4"-12 x 1.625	1 1/4"-12 x 2.500	1.999		2.562	.625	.250	1.125															2.969	2.500		1.625	2.625
	1.750	1 1/4"-12 x 2.000	1 3/4"-12 x 2.000	1 1/2"-12 x 2.000	1 1/2"-12 x 3.000	2.374		3.267	.750	.312	1.500															3.734	3.000		1.875	2.875
	2.000	1 1/2"-12 x 2.250	2"-12 x 2.250	1 3/4"-12 x 2.250	1 3/4"-12 x 3.500	2.624		3.812	.875	.312	1.688															4.312	3.750		2.000	3.000
	2.500	1 7/8"-12 x 3.000	2 1/2"-12 x 3.000	2 1/4"-12 x 3.000	2 1/4"-12 x 4.500	3.124		3.812	1.000	.312	2.062															4.312	3.750		2.250	3.250
	3.000	2 1/4"-12 x 3.500	3"-12 x 3.500	2 3/4"-12 x 3.500	2 3/4"-12 x 5.500	3.749		---	1.000	---	2.625															---	---		2.250	3.250
	3.500	2 1/2"-12 x 3.500	3 1/2"-12 x 3.500	3 1/4"-12 x 3.500	3 1/4"-12 x 6.500	4.249		---	1.000	---	3.000															---	---		2.250	3.250
6.000	1.375	1"-14 x 1.625	1 3/8"-12 x 1.625	1 1/4"-12 x 1.625	1 1/4"-12 x 2.500	1.999	1.812	3.267	.625	.312	1.125	1/2"-20	6.500	3/4	.625	2.000	1.500	.594	.438	.750	.750	5.000	6.250	3.250	4.879	3.734	3.000	.500	1.625	2.750
	1.750	1 1/4"-12 x 2.000	1 3/4"-12 x 2.000	1 1/2"-12 x 2.000	1 1/2"-12 x 3.000	2.374		3.267	.750	.312	1.500				.625											3.734	3.000		1.875	3.000
	2.000	1 1/2"-12 x 2.250	2"-12 x 2.250	1 3/4"-12 x 2.250	1 3/4"-12 x 3.500	2.624		3.812	.875	.312	1.688				.625											4.312	3.750		2.000	3.125
	2.500	1 7/8"-12 x 3.000	2 1/2"-12 x 3.000	2 1/4"-12 x 3.000	2 1/4"-12 x 4.500	3.124		3.812	1.000	.312	2.062				.625											4.312	3.750		2.250	3.375
	3.000	2 1/4"-12 x 3.500	3"-12 x 3.500	2 3/4"-12 x 3.500	2 3/4"-12 x 5.500	3.749		4.700	1.000	.375	2.625				.625											5.562	4.500		2.250	3.375
	3.500	2 1/2"-12 x 3.500	3 1/2"-12 x 3.500	3 1/4"-12 x 3.500	3 1/4"-12 x 6.500	4.249		5.200	1.000	.375	3.000				.625											6.062	5.000		2.250	3.375
	4.000	3"-12 x 4.000	4"-12 x 4.000	3 3/4"-12 x 4.000	3 3/4"-12 x 7.500	4.749		---	1.000	---	3.375				.750											---	---		2.250	3.375
BORE	MM	KM & KF	KD	KI	KA	B	BB	BC	C	CS	D	DD	E	EE	F	G	J	K	KB	KC	KN	LB	OD	P	R	RR	RS	TR	WB	Y

NEVA DESIGN

FILE: 2.11_LM11S2.dwg REV: 02/09/2010

27650 Groesbeck Hwy • Roseville, MI 48066-2759 • Phone 586.775.7211 • Fax 586.775.4545 • Toll Free 800.526.7968 • e-mail: sales@peninsularcylinders.com • www.peninsularcylinders.com

CAP TIE ROD EXTENDED

Medium Duty Aluminum Air Cylinder

Peninsular Mounting Style: **LM 11**

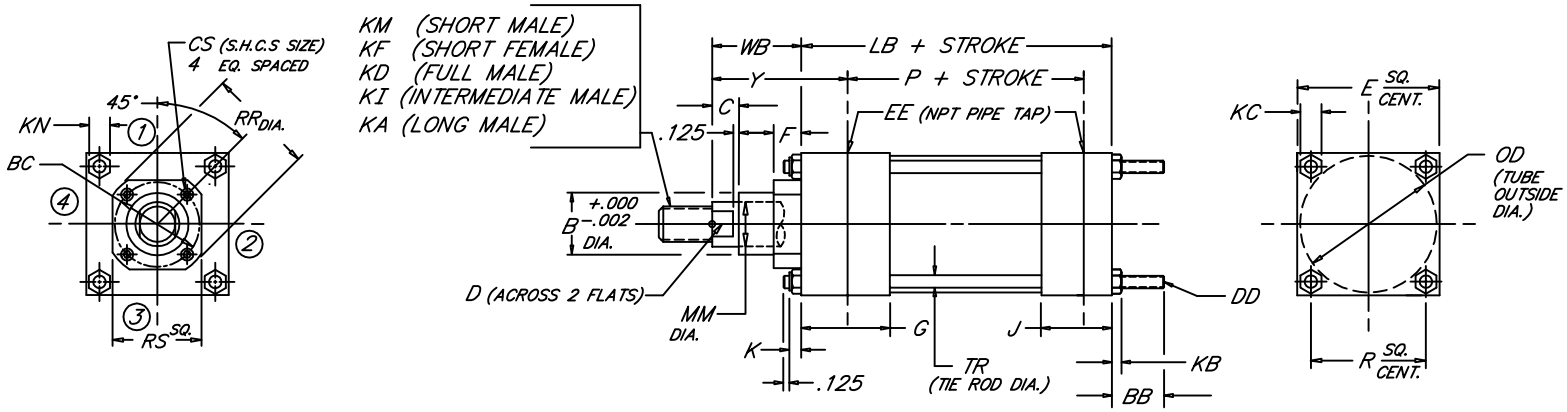

BORE	ROD MM	ROD THREAD X LENGTH KM & KF	KD	KI	KA	B	BB	BC	C	CS	D	DD	E	NPT EE	F	G	J	K	KB	KC	KN	LB	OD	P	R	RR	RS	TR	WB	Y
8.000	1.375	1"-14 x 1.625	1 3/8"-12 x 1.625	1 1/4"-12 x 1.625	1 1/4"-12 x 2.500	1.999	2.312	3.267	.625	.312	1.125	5/8"-18	8.500	3/4	.625	2.000	1.500	.750	.531	.938	.938	5.125	8.450	3.375	6.435	3.734	3.000	.625	1.625	2.750
	1.750	1 1/4"-12 x 2.000	1 3/4"-12 x 2.000	1 1/2"-12 x 2.000	1 1/2"-12 x 3.000	2.374		3.267	.750	.312	1.500															3.734	3.000		1.875	3.000
	2.000	1 1/2"-12 x 2.250	2"-12 x 2.250	1 3/4"-12 x 2.250	1 3/4"-12 x 3.500	2.624		3.812	.875	.312	1.688															4.312	3.750		2.000	3.125
	2.500	1 7/8"-12 x 3.000	2 1/2"-12 x 3.000	2 1/4"-12 x 3.000	2 1/4"-12 x 4.500	3.124		3.812	1.000	.312	2.062															4.312	3.750		2.250	3.375
	3.000	2 1/4"-12 x 3.500	3"-12 x 3.500	2 3/4"-12 x 3.500	2 3/4"-12 x 5.500	3.749		4.700	1.000	.375	2.625															5.562	4.500		2.250	3.375
	3.500	2 1/2"-12 x 3.500	3 1/2"-12 x 3.500	3 1/4"-12 x 3.500	3 1/4"-12 x 6.500	4.249		5.200	1.000	.375	3.000															6.062	5.000		2.250	3.375
	4.000	3"-12 x 4.000	4"-12 x 4.000	3 3/4"-12 x 4.000	3 3/4"-12 x 7.500	4.749		5.700	1.000	.375	3.375															6.562	5.500		2.250	3.375
	4.500	3 1/4"-12 x 4.500	4 1/2"-12 x 4.500	4 1/4"-12 x 4.500	4 1/4"-12 x 8.250	5.249		6.200	1.000	.375	3.875															7.062	6.000		2.250	3.375
	5.000	3 1/2"-12 x 5.000	5"-12 x 5.000	4 3/4"-12 x 5.000	4 3/4"-12 x 9.000	5.749		6.700	1.000	.375	4.250															7.562	6.500		2.250	3.375
	5.500	4"-12 x 5.500	5 1/2"-12 x 5.500	5 1/4"-12 x 5.500	5 1/4"-12 x 10.000	6.249		7.125	1.000	.375	4.625															7.938	7.000		2.250	3.375
10.000	1.750	1 1/4"-12 x 2.000	1 3/4"-12 x 2.000	1 1/2"-12 x 2.000	1 1/2"-12 x 3.000	2.374	2.688	3.812	.750	.312	1.500	3/4"-16	10.625	1	.625	2.250	2.000	.875	.625	1.094	1.062	6.375	10.450	4.250	7.920	4.312	3.750	.750	1.875	3.062
	2.000	1 1/2"-12 x 2.250	2"-12 x 2.250	1 3/4"-12 x 2.250	1 3/4"-12 x 3.500	2.624		3.812	.875	.312	1.688															4.312	3.750		2.000	3.187
	2.500	1 7/8"-12 x 3.000	2 1/2"-12 x 3.000	2 1/4"-12 x 3.000	2 1/4"-12 x 4.500	3.124		3.812	1.000	.312	2.062															4.312	3.750		2.250	3.437
	3.000	2 1/4"-12 x 3.500	3"-12 x 3.500	2 3/4"-12 x 3.500	2 3/4"-12 x 5.500	3.749		4.700	1.000	.375	2.625															5.562	4.500		2.250	3.437
	3.500	2 1/2"-12 x 3.500	3 1/2"-12 x 3.500	3 1/4"-12 x 3.500	3 1/4"-12 x 6.500	4.249		5.200	1.000	.375	3.000															6.062	5.000		2.250	3.437
	4.000	3"-12 x 4.000	4"-12 x 4.000	3 3/4"-12 x 4.000	3 3/4"-12 x 7.500	4.749		5.700	1.000	.375	3.375															6.562	5.500		2.250	3.437
	4.500	3 1/4"-12 x 4.500	4 1/2"-12 x 4.500	4 1/4"-12 x 4.500	4 1/4"-12 x 8.250	5.249		6.200	1.000	.375	3.875															7.062	6.000		2.250	3.437
	5.000	3 1/2"-12 x 5.000	5"-12 x 5.000	4 3/4"-12 x 5.000	4 3/4"-12 x 9.000	5.749		6.700	1.000	.375	4.250															7.562	6.500		2.250	3.437
	5.500	4"-12 x 5.500	5 1/2"-12 x 5.500	5 1/4"-12 x 5.500	5 1/4"-12 x 10.000	6.249		7.125	1.000	.375	4.625															7.938	7.000		2.250	3.437
12.000	2.000	1 1/2"-12 x 2.250	2"-12 x 2.250	1 3/4"-12 x 2.250	1 3/4"-12 x 3.500	2.624	2.688	3.812	.875	.312	1.688	3/4"-16	12.750	1	.625	2.250	2.000	.875	.625	1.094	1.062	6.875	12.450	4.750	9.405	4.312	3.750	.750	2.000	3.187
	2.500	1 7/8"-12 x 3.000	2 1/2"-12 x 3.000	2 1/4"-12 x 3.000	2 1/4"-12 x 4.500	3.124		3.812	1.000	.312	2.062															4.312	3.750		2.250	3.437
	3.000	2 1/4"-12 x 3.500	3"-12 x 3.500	2 3/4"-12 x 3.500	2 3/4"-12 x 5.500	3.749		4.700	1.000	.375	2.625															5.562	4.500		2.250	3.437
	3.500	2 1/2"-12 x 3.500	3 1/2"-12 x 3.500	3 1/4"-12 x 3.500	3 1/4"-12 x 6.500	4.249		5.200	1.000	.375	3.000															6.062	5.000		2.250	3.437
	4.000	3"-12 x 4.000	4"-12 x 4.000	3 3/4"-12 x 4.000	3 3/4"-12 x 7.500	4.749		5.700	1.000	.375	3.375															6.562	5.500		2.250	3.437
	4.500	3 1/4"-12 x 4.500	4 1/2"-12 x 4.500	4 1/4"-12 x 4.500	4 1/4"-12 x 8.250	5.249		6.200	1.000	.375	3.875															7.062	6.000		2.250	3.437
	5.000	3 1/2"-12 x 5.000	5"-12 x 5.000	4 3/4"-12 x 5.000	4 3/4"-12 x 9.000	5.749		6.700	1.000	.375	4.250															7.562	6.500		2.250	3.437
	5.500	4"-12 x 5.500	5 1/2"-12 x 5.500	5 1/4"-12 x 5.500	5 1/4"-12 x 10.000	6.249		7.125	1.000	.375	4.625															7.938	7.000		2.250	3.437
14.000	2.500	1 7/8"-12 x 3.000	2 1/2"-12 x 3.000	2 1/4"-12 x 3.000	2 1/4"-12 x 4.500	3.124	3.188	3.812		.312	2.062	7/8"-14	14.750	1 1/4	.625	2.750	2.250	1.000	.750	1.281	1.250	8.125	14.450	5.625	10.889	4.312	3.750	.875	2.250	3.688
	3.000	2 1/4"-12 x 3.500	3"-12 x 3.500	2 3/4"-12 x 3.500	2 3/4"-12 x 5.500	3.749		4.700		.375	2.625															5.562	4.500			
	3.500	2 1/2"-12 x 3.500	3 1/2"-12 x 3.500	3 1/4"-12 x 3.500	3 1/4"-12 x 6.500	4.249		5.200		.375	3.000															6.062	5.000			
	4.000	3"-12 x 4.000	4"-12 x 4.000	3 3/4"-12 x 4.000	3 3/4"-12 x 7.500	4.749		5.700		.375	3.375															6.562	5.500			
	4.500	3 1/4"-12 x 4.500	4 1/2"-12 x 4.500	4 1/4"-12 x 4.500	4 1/4"-12 x 8.250	5.249		6.200		.375	3.875															7.062	6.000			
	5.000	3 1/2"-12 x 5.000	5"-12 x 5.000	4 3/4"-12 x 5.000	4 3/4"-12 x 9.000	5.749		6.700		.375	4.250															7.562	6.500			
	5.500	4"-12 x 5.500	5 1/2"-12 x 5.500	5 1/4"-12 x 5.500	5 1/4"-12 x 10.000	6.249		7.125		.375	4.625															7.938	7.000			
BORE	MM	KM & KF	KD	KI	KA	B	BB	BC	C	CS	D	DD	E	EE	F	G	J	K	KB	KC	KN	LB	OD	P	R	RR	RS	TR	WB	Y

NEMA DESIGN

2.11_LM11L2.dwg REV: 02/09/2010

27650 Groesbeck Hwy • Roseville, MI 48066-2759 • Phone 586.775.7211 • Fax 586.775.4545 • Toll Free 800.526.7968 • e-mail: sales@peninsularcylinders.com • www.peninsularcylinders.com

HEAD & CAP TIE ROD EXTENDED

Peninsular Mounting Style: **LM 12**

Medium Duty Aluminum Air Cylinder

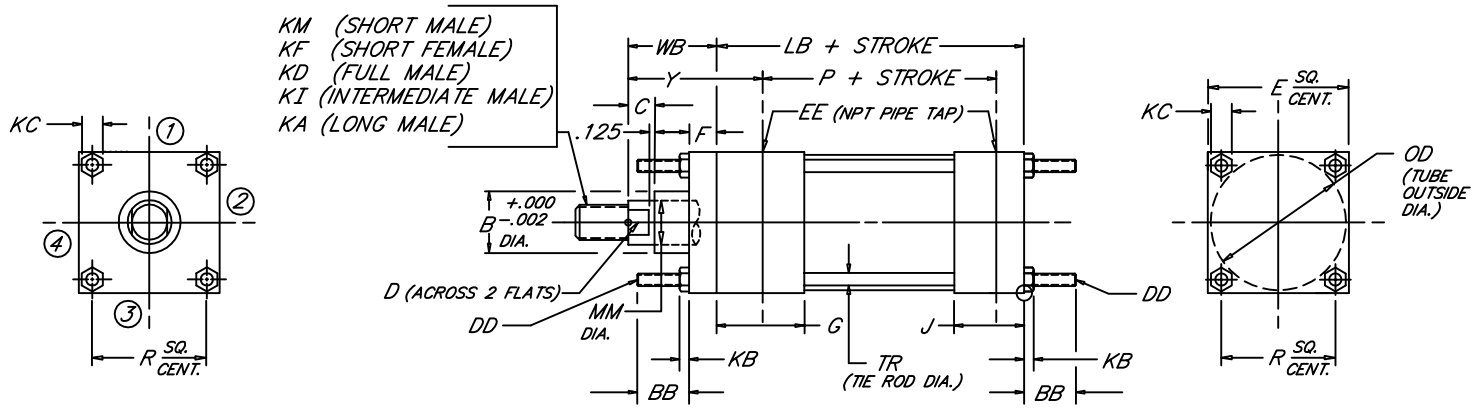

BORE	MM	ROD: KM & KF	ROD THREAD X LENGTH: KD	KI	KA	B	BB	C	D	DD	E	NPT: EE	F	G	J	KB	KC	LB	OD	P	R	TR	WB	Y
1.500	.625	7/16"-20 x .750	5/8"-18 x .750	1/2"-20 x .750	1/2"-20 x 1.125	1.124	1.000	.375	.500	1/4"-28	2.000	3/8	.375	1.500	1.000	.218	.438	3.625	1.750	2.335	1.428	.250	1.000	1.875
	1.000	3/4"-16 x 1.125	1"-14 x 1.125	7/8"-14 x 1.125	7/8"-14 x 1.875	1.499		.500	.875														1.375	2.250
2.000	.625	7/16"-20 x .750	5/8"-18 x .750	1/2"-20 x .750	1/2"-20 x 1.125	1.124	1.125	.375	.500	5/16"-24	2.500	3/8	.375	1.500	1.000	.250	.500	3.625	2.250	2.335	1.838	.312	1.000	1.875
	1.000	3/4"-16 x 1.125	1"-14 x 1.125	7/8"-14 x 1.125	7/8"-14 x 1.875	1.499		.500	.875														1.375	2.250
	1.375	1"-14 x 1.625	1 3/8"-12 x 1.625	1 1/4"-12 x 1.625	1 1/4"-12 x 2.500	1.999		.625	1.125														1.625	2.500
2.500	.625	7/16"-20 x .750	5/8"-18 x .750	1/2"-20 x .750	1/2"-20 x 1.125	1.124	1.125	.375	.500	5/16"-24	3.000	3/8	.375	1.500	1.000	.250	.500	3.750	2.750	2.460	2.192	.312	1.000	1.875
	1.000	3/4"-16 x 1.125	1"-14 x 1.125	7/8"-14 x 1.125	7/8"-14 x 1.875	1.499		.500	.875														1.375	2.250
	1.375	1"-14 x 1.625	1 3/8"-12 x 1.625	1 1/4"-12 x 1.625	1 1/4"-12 x 2.500	1.999		.625	1.125														1.625	2.500
	1.750	1 1/4"-12 x 2.000	1 3/4"-12 x 2.000	1 1/2"-12 x 2.000	1 1/2"-12 x 3.000	2.374		.750	1.500														1.875	2.750
3.250	1.000	3/4"-16 x 1.125	1"-14 x 1.125	7/8"-14 x 1.125	7/8"-14 x 1.875	1.499	1.375	.500	.875	3/8"-24	3.750	1/2	.625	1.750	1.250	.328	.562	4.250	3.500	2.750	2.758	.375	1.375	2.375
	1.375	1"-14 x 1.625	1 3/8"-12 x 1.625	1 1/4"-12 x 1.625	1 1/4"-12 x 2.500	1.999		.625	1.125														1.625	2.625
	1.750	1 1/4"-12 x 2.000	1 3/4"-12 x 2.000	1 1/2"-12 x 2.000	1 1/2"-12 x 3.000	2.374		.750	1.500														1.875	2.875
	2.000	1 1/2"-12 x 2.250	2"-12 x 2.250	1 3/4"-12 x 2.250	1 3/4"-12 x 3.500	2.624		.875	1.688														2.000	3.000
4.000	1.000	3/4"-16 x 1.125	1"-14 x 1.125	7/8"-14 x 1.125	7/8"-14 x 1.875	1.499	1.375	.500	.875	3/8"-24	4.500	1/2	.625	1.750	1.250	.328	.562	4.250	4.250	2.750	3.323	.375	1.375	2.375
	1.375	1"-14 x 1.625	1 3/8"-12 x 1.625	1 1/4"-12 x 1.625	1 1/4"-12 x 2.500	1.999		.625	1.125														1.625	2.625
	1.750	1 1/4"-12 x 2.000	1 3/4"-12 x 2.000	1 1/2"-12 x 2.000	1 1/2"-12 x 3.000	2.374		.750	1.500														1.875	2.875
	2.000	1 1/2"-12 x 2.250	2"-12 x 2.250	1 3/4"-12 x 2.250	1 3/4"-12 x 3.500	2.624		.875	1.688														2.000	3.000
	2.500	1 7/8"-12 x 3.000	2 1/2"-12 x 3.000	2 1/4"-12 x 3.000	2 1/4"-12 x 4.500	3.124		1.000	2.062														2.250	3.250
5.000	1.000	3/4"-16 x 1.125	1"-14 x 1.125	7/8"-14 x 1.125	7/8"-14 x 1.875	1.499	1.812	.500	.875	1/2"-20	5.500	1/2	.625	1.750	1.250	.438	.750	4.500	5.250	3.000	4.101	.500	1.375	2.375
	1.375	1"-14 x 1.625	1 3/8"-12 x 1.625	1 1/4"-12 x 1.625	1 1/4"-12 x 2.500	1.999		.625	1.125														1.625	2.625
	1.750	1 1/4"-12 x 2.000	1 3/4"-12 x 2.000	1 1/2"-12 x 2.000	1 1/2"-12 x 3.000	2.374		.750	1.500														1.875	2.875
	2.000	1 1/2"-12 x 2.250	2"-12 x 2.250	1 3/4"-12 x 2.250	1 3/4"-12 x 3.500	2.624		.875	1.688														2.000	3.000
	2.500	1 7/8"-12 x 3.000	2 1/2"-12 x 3.000	2 1/4"-12 x 3.000	2 1/4"-12 x 4.500	3.124		1.000	2.062														2.250	3.250
	3.000	2 1/4"-12 x 3.500	3"-12 x 3.500	2 3/4"-12 x 3.500	2 3/4"-12 x 5.500	3.749		1.000	2.625														2.250	3.250
	3.500	2 1/2"-12 x 3.500	3 1/2"-12 x 3.500	3 1/4"-12 x 3.500	3 1/4"-12 x 6.500	4.249		1.000	3.000														2.250	3.250
6.000	1.375	1"-14 x 1.625	1 3/8"-12 x 1.625	1 1/4"-12 x 1.625	1 1/4"-12 x 2.500	1.999	1.812	.625	1.125	1/2"-20	6.500	3/4	.750	2.000	1.500	.438	.750	5.000	6.250	3.250	4.879	.500	1.625	2.750
	1.750	1 1/4"-12 x 2.000	1 3/4"-12 x 2.000	1 1/2"-12 x 2.000	1 1/2"-12 x 3.000	2.374		.750	1.500														1.875	3.000
	2.000	1 1/2"-12 x 2.250	2"-12 x 2.250	1 3/4"-12 x 2.250	1 3/4"-12 x 3.500	2.624		.875	1.688														2.000	3.125
	2.500	1 7/8"-12 x 3.000	2 1/2"-12 x 3.000	2 1/4"-12 x 3.000	2 1/4"-12 x 4.500	3.124		1.000	2.062														2.250	3.375
	3.000	2 1/4"-12 x 3.500	3"-12 x 3.500	2 3/4"-12 x 3.500	2 3/4"-12 x 5.500	3.749		1.000	2.625														2.250	3.375
	3.500	2 1/2"-12 x 3.500	3 1/2"-12 x 3.500	3 1/4"-12 x 3.500	3 1/4"-12 x 6.500	4.249		1.000	3.000														2.250	3.375
	4.000	3"-12 x 4.000	4"-12 x 4.000	3 3/4"-12 x 4.000	3 3/4"-12 x 7.500	4.749		1.000	3.375														2.250	3.375
BORE	MM	KM & KF	KD	KI	KA	B	BB	C	D	DD	E	EE	F	G	J	KB	KC	LB	OD	P	R	TR	WB	Y

NEVA DESIGN

FILE: 2.12_LM12S2.dwg REV: 02/09/2010

27650 Groesbeck Hwy • Roseville, MI 48066-2759 • Phone 586.775.7211 • Fax 586.775.4545 • Toll Free 800.526.7968 • e-mail: sales@peninsularcylinders.com • www.peninsularcylinders.com

HEAD & CAP TIE ROD EXTENDED

Peninsular Mounting Style: **LM 12**

Medium Duty Aluminum Air Cylinder

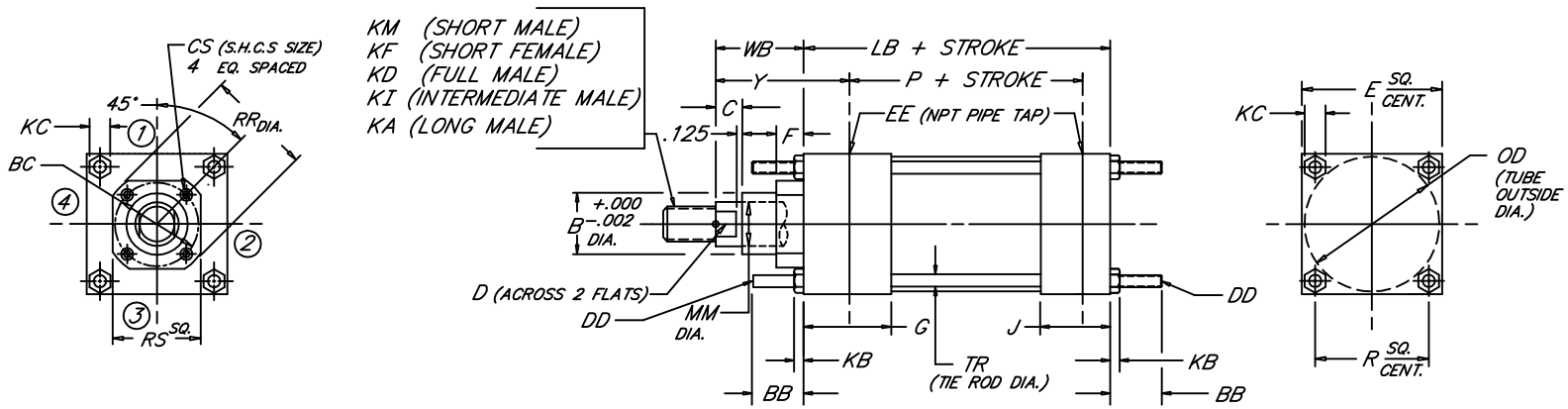

BORE	ROD MM	ROD THREAD X LENGTH KM & KF	KD	KI	KA	B	BB	BC	C	CS	D	DD	E	NPT EE	F	G	J	KB	KC	LB	OD	P	R	RR	RS	TR	WB	Y
8.000	1.375	1"-14 x 1.625	1 3/8"-12 x 1.625	1 1/4"-12 x 1.625	1 1/4"-12 x 2.500	1.999		3.267	.625	.312	1.125													3.734	3.000		1.625	2.750
	1.750	1 1/4"-12 x 2.000	1 3/4"-12 x 2.000	1 1/2"-12 x 2.000	1 1/2"-12 x 3.000	2.374		3.267	.750	.312	1.500													3.734	3.000		1.875	3.000
	2.000	1 1/2"-12 x 2.250	2"-12 x 2.250	1 3/4"-12 x 2.250	1 3/4"-12 x 3.500	2.624		3.812	.875	.312	1.688													4.312	3.750		2.000	3.125
	2.500	1 7/8"-12 x 3.000	2 1/2"-12 x 3.000	2 1/4"-12 x 3.000	2 1/4"-12 x 4.500	3.124		3.812	1.000	.312	2.062													4.312	3.750		2.250	3.375
	3.000	2 1/4"-12 x 3.500	3"-12 x 3.500	2 3/4"-12 x 3.500	2 3/4"-12 x 5.500	3.749		4.700	1.000	.375	2.625													5.562	4.500		2.250	3.375
	3.500	2 1/2"-12 x 3.500	3 1/2"-12 x 3.500	3 1/4"-12 x 3.500	3 1/4"-12 x 6.500	4.249	2.312	5.200	1.000	.375	3.000	5/8"-18	8.500	3/4	.625	2.000	1.500	.531	.938	5.125	8.450	3.375	6.435	6.062	5.000	.625	2.250	3.375
	4.000	3"-12 x 4.000	4"-12 x 4.000	3 3/4"-12 x 4.000	3 3/4"-12 x 7.500	4.749		5.700	1.000	.375	3.375													6.562	5.500		2.250	3.375
	4.500	3 1/4"-12 x 4.500	4 1/2"-12 x 4.500	4 1/4"-12 x 4.500	4 1/4"-12 x 8.250	5.249		6.200	1.000	.375	3.875													7.062	6.000		2.250	3.375
	5.000	3 1/2"-12 x 5.000	5"-12 x 5.000	4 3/4"-12 x 5.000	4 3/4"-12 x 9.000	5.749		6.700	1.000	.375	4.250													7.562	6.500		2.250	3.375
	5.500	4"-12 x 5.500	5 1/2"-12 x 5.500	5 1/4"-12 x 5.500	5 1/4"-12 x 10.000	6.249		7.125	1.000	.375	4.625													7.938	7.000		2.250	3.375
10.000	1.750	1 1/4"-12 x 2.000	1 3/4"-12 x 2.000	1 1/2"-12 x 2.000	1 1/2"-12 x 3.000	2.374		3.812	.750	.312	1.500													4.312	3.750		1.875	3.062
	2.000	1 1/2"-12 x 2.250	2"-12 x 2.250	1 3/4"-12 x 2.250	1 3/4"-12 x 3.500	2.624		3.812	.875	.312	1.688													4.312	3.750		2.000	3.187
	2.500	1 7/8"-12 x 3.000	2 1/2"-12 x 3.000	2 1/4"-12 x 3.000	2 1/4"-12 x 4.500	3.124		3.812	1.000	.312	2.062													4.312	3.750		2.250	3.437
	3.000	2 1/4"-12 x 3.500	3"-12 x 3.500	2 3/4"-12 x 3.500	2 3/4"-12 x 5.500	3.749		4.700	1.000	.375	2.625													5.562	4.500		2.250	3.437
	3.500	2 1/2"-12 x 3.500	3 1/2"-12 x 3.500	3 1/4"-12 x 3.500	3 1/4"-12 x 6.500	4.249	2.688	5.200	1.000	.375	3.000	3/4"-16	10.625	1	.625	2.250	2.000	.625	1.094	6.375	10.450	4.250	7.920	6.062	5.000	.750	2.250	3.437
	4.000	3"-12 x 4.000	4"-12 x 4.000	3 3/4"-12 x 4.000	3 3/4"-12 x 7.500	4.749		5.700	1.000	.375	3.375													6.562	5.500		2.250	3.437
	4.500	3 1/4"-12 x 4.500	4 1/2"-12 x 4.500	4 1/4"-12 x 4.500	4 1/4"-12 x 8.250	5.249		6.200	1.000	.375	3.875													7.062	6.000		2.250	3.437
	5.000	3 1/2"-12 x 5.000	5"-12 x 5.000	4 3/4"-12 x 5.000	4 3/4"-12 x 9.000	5.749		6.700	1.000	.375	4.250													7.562	6.500		2.250	3.437
	5.500	4"-12 x 5.500	5 1/2"-12 x 5.500	5 1/4"-12 x 5.500	5 1/4"-12 x 10.000	6.249		7.125	1.000	.375	4.625													7.938	7.000		2.250	3.437
12.000	2.000	1 1/2"-12 x 2.250	2"-12 x 2.250	1 3/4"-12 x 2.250	1 3/4"-12 x 3.500	2.624		3.812	.875	.312	1.688													4.312	3.750		2.000	3.187
	2.500	1 7/8"-12 x 3.000	2 1/2"-12 x 3.000	2 1/4"-12 x 3.000	2 1/4"-12 x 4.500	3.124		3.812	1.000	.312	2.062													4.312	3.750		2.250	3.437
	3.000	2 1/4"-12 x 3.500	3"-12 x 3.500	2 3/4"-12 x 3.500	2 3/4"-12 x 5.500	3.749		4.700	1.000	.375	2.625													5.562	4.500		2.250	3.437
	3.500	2 1/2"-12 x 3.500	3 1/2"-12 x 3.500	3 1/4"-12 x 3.500	3 1/4"-12 x 6.500	4.249	2.688	5.200	1.000	.375	3.000	3/4"-16	12.750	1	.625	2.250	2.000	.625	1.094	6.875	12.450	4.750	9.405	6.062	5.000	.750	2.250	3.437
	4.000	3"-12 x 4.000	4"-12 x 4.000	3 3/4"-12 x 4.000	3 3/4"-12 x 7.500	4.749		5.700	1.000	.375	3.375													6.562	5.500		2.250	3.437
	4.500	3 1/4"-12 x 4.500	4 1/2"-12 x 4.500	4 1/4"-12 x 4.500	4 1/4"-12 x 8.250	5.249		6.200	1.000	.375	3.875													7.062	6.000		2.250	3.437
	5.000	3 1/2"-12 x 5.000	5"-12 x 5.000	4 3/4"-12 x 5.000	4 3/4"-12 x 9.000	5.749		6.700	1.000	.375	4.250													7.562	6.500		2.250	3.437
	5.500	4"-12 x 5.500	5 1/2"-12 x 5.500	5 1/4"-12 x 5.500	5 1/4"-12 x 10.000	6.249		7.125	1.000	.375	4.625													7.938	7.000		2.250	3.437
14.000	2.500	1 7/8"-12 x 3.000	2 1/2"-12 x 3.000	2 1/4"-12 x 3.000	2 1/4"-12 x 4.500	3.124		3.812		.312	2.062													4.312	3.750			
	3.000	2 1/4"-12 x 3.500	3"-12 x 3.500	2 3/4"-12 x 3.500	2 3/4"-12 x 5.500	3.749		4.700		.375	2.625													5.562	4.500			
	3.500	2 1/2"-12 x 3.500	3 1/2"-12 x 3.500	3 1/4"-12 x 3.500	3 1/4"-12 x 6.500	4.249		5.200		.375	3.000													6.062	5.000			
	4.000	3"-12 x 4.000	4"-12 x 4.000	3 3/4"-12 x 4.000	3 3/4"-12 x 7.500	4.749	3.188	5.700	1.000	.375	3.375	7/8"-14	14.750	1 1/4	.625	2.750	2.250	.750	1.281	8.125	14.450	5.625	10.889	6.562	5.500	.875	2.250	3.688
	4.500	3 1/4"-12 x 4.500	4 1/2"-12 x 4.500	4 1/4"-12 x 4.500	4 1/4"-12 x 8.250	5.249		6.200		.375	3.875													7.062	6.000			
	5.000	3 1/2"-12 x 5.000	5"-12 x 5.000	4 3/4"-12 x 5.000	4 3/4"-12 x 9.000	5.749		6.700		.375	4.250													7.562	6.500			
	5.500	4"-12 x 5.500	5 1/2"-12 x 5.500	5 1/4"-12 x 5.500	5 1/4"-12 x 10.000	6.249		7.125		.375	4.625													7.938	7.000			
BORE	MM	KM & KF	KD	KI	KA	B	BB	BC	C	CS	D	DD	E	EE	F	G	J	KB	KC	LB	OD	P	R	RR	RS	TR	WB	Y

NEVA DESIGN

2.12_LM12L2.dwg REV: 02/09/2010

27650 Groesbeck Hwy • Roseville, MI 48066-2759 • Phone 586.775.7211 • Fax 586.775.4545 • Toll Free 800.526.7968 • e-mail: sales@peninsularcylinders.com • www.peninsularcylinders.com

END ANGLES

Medium Duty Aluminum Air Cylinder

Peninsular Mounting Style: **LM 13**

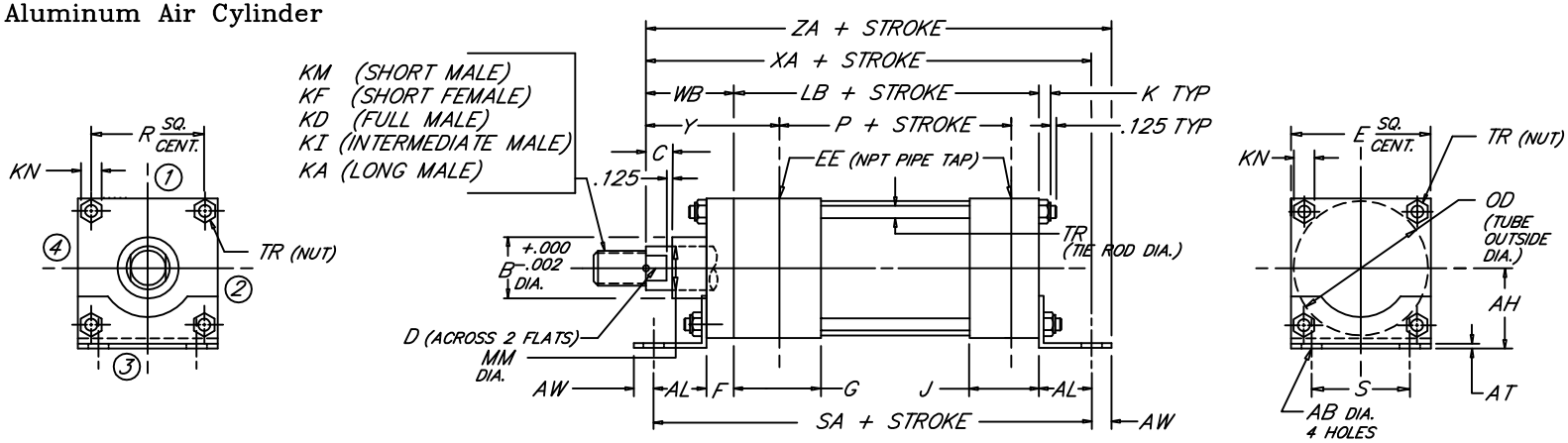

BORE	ROD MM	ROD THREAD X LENGTH KM & KF	KD	KI	KA	AB	AH	AL	AT	AW	B	C	D	E	NPT EE	F	G	J	K	KN	LB	OD	P	R	S	SA	TR	WB	XA	Y	ZA
1.500	.625	7/16"-20 x .750	5/8"-18 x .750	1/2"-20 x .750	1/2"-20 x 1.125	.438	1.188	1.000	.125	.375	1.124	.375	.500	2.000	3/8	.375	1.500	1.000	.312	.438	3.625	1.750	2.335	1.428	1.250	6.000	.250	1.000	5.625	1.875	6.000
	1.000	3/4"-16 x 1.125	1"-14 x 1.125	7/8"-14 x 1.125	7/8"-14 x 1.875						1.499	.500	.875															1.375	6.000	2.250	6.375
2.000	.625	7/16"-20 x .750	5/8"-18 x .750	1/2"-20 x .750	1/2"-20 x 1.125	.438	1.438	1.000	.125	.375	1.124	.375	.500	2.500	3/8	.375	1.500	1.000	.344	.500	3.625	2.250	2.335	1.838	1.750	6.000	.312	1.000	5.625	1.875	6.000
	1.000	3/4"-16 x 1.125	1"-14 x 1.125	7/8"-14 x 1.125	7/8"-14 x 1.875						1.499	.500	.875															1.375	6.000	2.250	6.375
	1.375	1"-14 x 1.625	1 3/8"-12 x 1.625	1 1/4"-12 x 1.625	1 1/4"-12 x 2.500						1.999	.625	1.125															1.625	6.250	2.500	6.625
2.500	.625	7/16"-20 x .750	5/8"-18 x .750	1/2"-20 x .750	1/2"-20 x 1.125	.438	1.625	1.000	.125	.375	1.124	.375	.500	3.000	3/8	.375	1.500	1.000	.344	.500	3.750	2.750	2.460	2.192	2.250	6.125	.312	1.000	5.750	1.875	6.125
	1.000	3/4"-16 x 1.125	1"-14 x 1.125	7/8"-14 x 1.125	7/8"-14 x 1.875						1.499	.500	.875															1.375	6.125	2.250	6.500
	1.375	1"-14 x 1.625	1 3/8"-12 x 1.625	1 1/4"-12 x 1.625	1 1/4"-12 x 2.500						1.999	.625	1.125															1.625	6.375	2.500	6.750
	1.750	1 1/4"-12 x 2.000	1 3/4"-12 x 2.000	1 1/2"-12 x 2.000	1 1/2"-12 x 3.000						2.374	.750	1.500															1.875	6.625	2.750	7.000
3.250	1.000	3/4"-16 x 1.125	1"-14 x 1.125	7/8"-14 x 1.125	7/8"-14 x 1.875	.562	1.938	1.250	.125	.500	1.499	.500	.875	3.750	1/2	.625	1.750	1.250	.438	.562	4.250	3.500	2.750	2.758	2.750	7.375	.375	1.375	6.875	2.375	7.375
	1.375	1"-14 x 1.625	1 3/8"-12 x 1.625	1 1/4"-12 x 1.625	1 1/4"-12 x 2.500						1.999	.625	1.125															1.625	7.125	2.625	7.625
	1.750	1 1/4"-12 x 2.000	1 3/4"-12 x 2.000	1 1/2"-12 x 2.000	1 1/2"-12 x 3.000						2.374	.750	1.500															1.875	7.375	2.875	7.875
	2.000	1 1/2"-12 x 2.250	2"-12 x 2.250	1 3/4"-12 x 2.250	1 3/4"-12 x 3.500						2.624	.875	1.688															2.000	7.500	3.000	8.000
4.000	1.000	3/4"-16 x 1.125	1"-14 x 1.125	7/8"-14 x 1.125	7/8"-14 x 1.875	.562	2.250	1.250	.125	.500	1.499	.500	.875	4.500	1/2	.625	1.750	1.250	.438	.562	4.250	4.250	2.750	3.323	3.500	7.375	.375	1.375	6.875	2.375	7.375
	1.375	1"-14 x 1.625	1 3/8"-12 x 1.625	1 1/4"-12 x 1.625	1 1/4"-12 x 2.500						1.999	.625	1.125															1.625	7.125	2.625	7.625
	1.750	1 1/4"-12 x 2.000	1 3/4"-12 x 2.000	1 1/2"-12 x 2.000	1 1/2"-12 x 3.000						2.374	.750	1.500															1.875	7.375	2.875	7.875
	2.000	1 1/2"-12 x 2.250	2"-12 x 2.250	1 3/4"-12 x 2.250	1 3/4"-12 x 3.500						2.624	.875	1.688															2.000	7.500	3.000	8.000
	2.500	1 7/8"-12 x 3.000	2 1/2"-12 x 3.000	2 1/4"-12 x 3.000	2 1/4"-12 x 4.500						3.124	1.000	2.062															2.250	7.750	3.250	8.250
5.000	1.000	3/4"-16 x 1.125	1"-14 x 1.125	7/8"-14 x 1.125	7/8"-14 x 1.875	.688	2.750	1.375	.188	.625	1.499	.500	.875	5.500	1/2	.625	1.750	1.250	.594	.750	4.500	5.250	3.000	4.101	4.250	7.875	.500	1.375	7.250	2.375	7.875
	1.375	1"-14 x 1.625	1 3/8"-12 x 1.625	1 1/4"-12 x 1.625	1 1/4"-12 x 2.500						1.999	.625	1.125															1.625	7.500	2.625	8.125
	1.750	1 1/4"-12 x 2.000	1 3/4"-12 x 2.000	1 1/2"-12 x 2.000	1 1/2"-12 x 3.000						2.374	.750	1.500															1.875	7.750	2.875	8.375
	2.000	1 1/2"-12 x 2.250	2"-12 x 2.250	1 3/4"-12 x 2.250	1 3/4"-12 x 3.500						2.624	.875	1.688															2.000	7.875	3.000	8.500
	2.500	1 7/8"-12 x 3.000	2 1/2"-12 x 3.000	2 1/4"-12 x 3.000	2 1/4"-12 x 4.500						3.124	1.000	2.062															2.250	8.125	3.250	8.750
	3.000	2 1/4"-12 x 3.500	3"-12 x 3.500	2 3/4"-12 x 3.500	2 3/4"-12 x 5.500						3.749	1.000	2.625															2.250	8.125	3.250	8.750
	3.500	2 1/2"-12 x 3.500	3 1/2"-12 x 3.500	3 1/4"-12 x 3.500	3 1/4"-12 x 6.500						4.249	1.000	3.000															2.250	8.125	3.250	8.750
6.000	1.375	1"-14 x 1.625	1 3/8"-12 x 1.625	1 1/4"-12 x 1.625	1 1/4"-12 x 2.500	.812	3.250	1.375	.188	.625	1.999	.625	1.125	6.500	3/4	.750	2.000	1.500	.594	.750	5.000	6.250	3.250	4.879	5.250	8.500	.500	1.625	8.000	2.750	8.625
	1.750	1 1/4"-12 x 2.000	1 3/4"-12 x 2.000	1 1/2"-12 x 2.000	1 1/2"-12 x 3.000						2.374	.750	1.500															1.875	8.250	3.000	8.875
	2.000	1 1/2"-12 x 2.250	2"-12 x 2.250	1 3/4"-12 x 2.250	1 3/4"-12 x 3.500						2.624	.875	1.688															2.000	8.375	3.125	9.000
	2.500	1 7/8"-12 x 3.000	2 1/2"-12 x 3.000	2 1/4"-12 x 3.000	2 1/4"-12 x 4.500						3.124	1.000	2.062															2.250	8.625	3.375	9.250
	3.000	2 1/4"-12 x 3.500	3"-12 x 3.500	2 3/4"-12 x 3.500	2 3/4"-12 x 5.500						3.749	1.000	2.625															2.250	8.625	3.375	9.250
	3.500	2 1/2"-12 x 3.500	3 1/2"-12 x 3.500	3 1/4"-12 x 3.500	3 1/4"-12 x 6.500						4.249	1.000	3.000															2.250	8.625	3.375	9.250
	4.000	3"-12 x 4.000	4"-12 x 4.000	3 3/4"-12 x 4.000	3 3/4"-12 x 7.500						4.749	1.000	3.375															2.250	8.625	3.375	9.250
BORE	MM	KM & KF	KD	KI	KA	AB	AH	AL	AT	AW	B	C	D	E	EE	F	G	J	K	KN	LB	OD	P	R	S	SA	TR	WB	XA	Y	ZA

NEWA DESIGN

FILE: 2.13_LM13S2.dwg REV: 02/09/2010

27650 Groesbeck Hwy • Roseville, MI 48066-2759 • Phone 586.775.7211 • Fax 586.775.4545 • Toll Free 800.526.7968 • e-mail: sales@peninsularcylinders.com • www.peninsularcylinders.com

END ANGLES

Medium Duty Aluminum Air Cylinder

Peninsular Mounting Style: **LM 13**

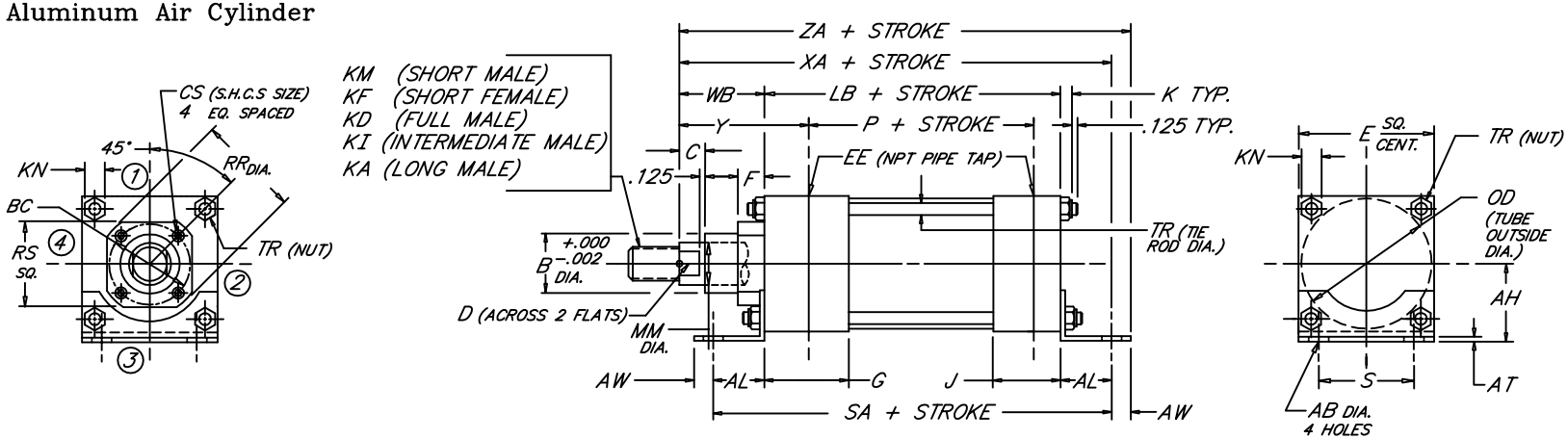

BORE	MM	ROD THREAD X LENGTH KM & KF	KD	KI	KA	AB	AH	AL	AT	AW	B	BC	C	CS	D	E	EE (NPT)	F	G	J	K	KN	LB	OD	P	R	RR	RS	S	SA	TR	WB	XA	Y	ZA
8.000	1.375	1"-14 x 1.625	1 3/8"-12 x 1.625	1 1/4"-12 x 1.625	1 1/4"-12 x 2.500	.812	4.250	1.8125	.250	.688	1.999	3.267	.625	.312	1.125	8.500	3/4	.625	2.000	1.500	.750	.938	5.125	8.450	3.375	6.435	3.734	3.000	7.125	8.750	.625	1.625	8.562	2.750	9.250
	1.750	1 1/4"-12 x 2.000	1 3/4"-12 x 2.000	1 1/2"-12 x 2.000	1 1/2"-12 x 3.000						2.374	3.267	.750	.312	1.500												3.734	3.000				1.875	8.812	3.000	9.500
	2.000	1 1/2"-12 x 2.250	2"-12 x 2.250	1 3/4"-12 x 2.250	1 3/4"-12 x 3.500						2.624	3.812	.875	.312	1.688												4.312	3.750				2.000	8.938	3.125	9.625
	2.500	1 7/8"-12 x 3.000	2 1/2"-12 x 3.000	2 1/4"-12 x 3.000	2 1/4"-12 x 4.500						3.124	3.812	1.000	.312	2.062												4.312	3.750				2.250	9.188	3.375	9.875
	3.000	2 1/4"-12 x 3.500	3"-12 x 3.500	2 3/4"-12 x 3.500	2 3/4"-12 x 5.500						3.749	4.700	1.000	.375	2.625												5.562	4.500				2.250	9.188	3.375	9.875
	3.500	2 1/2"-12 x 3.500	3 1/2"-12 x 3.500	3 1/4"-12 x 3.500	3 1/4"-12 x 6.500						4.249	5.200	1.000	.375	3.000												6.062	5.000				2.250	9.188	3.375	9.875
	4.000	3"-12 x 4.000	4"-12 x 4.000	3 3/4"-12 x 4.000	3 3/4"-12 x 7.500						4.749	5.700	1.000	.375	3.375												6.562	5.500				2.250	9.188	3.375	9.875
	4.500	3 1/4"-12 x 4.500	4 1/2"-12 x 4.500	4 1/4"-12 x 4.500	4 1/4"-12 x 8.250						5.249	6.200	1.000	.375	3.875												7.062	6.000				2.250	9.188	3.375	9.875
	5.000	3 1/2"-12 x 5.000	5"-12 x 5.000	4 3/4"-12 x 5.000	4 3/4"-12 x 9.000						5.749	6.700	1.000	.375	4.250												7.562	6.500				2.250	9.188	3.375	9.875
	5.500	4"-12 x 5.500	5 1/2"-12 x 5.500	5 1/4"-12 x 5.500	5 1/4"-12 x 10.000						6.249	7.125	1.000	.375	4.625												7.938	7.000				2.250	9.188	3.375	9.875
10.000	1.750	1 1/4"-12 x 2.000	1 3/4"-12 x 2.000	1 1/2"-12 x 2.000	1 1/2"-12 x 3.000	1.062	5.312	2.125	.250	.875	2.374	3.812	.750	.312	1.500	10.625	1	.625	2.250	2.000	.875	1.062	6.375	10.450	4.250	7.920	4.312	3.750	8.875	10.625	.750	1.875	10.375	3.062	11.250
	2.000	1 1/2"-12 x 2.250	2"-12 x 2.250	1 3/4"-12 x 2.250	1 3/4"-12 x 3.500						2.624	3.812	.875	.312	1.688												4.312	3.750				2.000	10.500	3.187	11.375
	2.500	1 7/8"-12 x 3.000	2 1/2"-12 x 3.000	2 1/4"-12 x 3.000	2 1/4"-12 x 4.500						3.124	3.812	1.000	.312	2.062												4.312	3.750				2.250	10.750	3.437	11.625
	3.000	2 1/4"-12 x 3.500	3"-12 x 3.500	2 3/4"-12 x 3.500	2 3/4"-12 x 5.500						3.749	4.700	1.000	.375	2.625												5.562	4.500				2.250	10.750	3.437	11.625
	3.500	2 1/2"-12 x 3.500	3 1/2"-12 x 3.500	3 1/4"-12 x 3.500	3 1/4"-12 x 6.500						4.249	5.200	1.000	.375	3.000												6.062	5.000				2.250	10.750	3.437	11.625
	4.000	3"-12 x 4.000	4"-12 x 4.000	3 3/4"-12 x 4.000	3 3/4"-12 x 7.500						4.749	5.700	1.000	.375	3.375												6.562	5.500				2.250	10.750	3.437	11.625
	4.500	3 1/4"-12 x 4.500	4 1/2"-12 x 4.500	4 1/4"-12 x 4.500	4 1/4"-12 x 8.250						5.249	6.200	1.000	.375	3.875												7.062	6.000				2.250	10.750	3.437	11.625
	5.000	3 1/2"-12 x 5.000	5"-12 x 5.000	4 3/4"-12 x 5.000	4 3/4"-12 x 9.000						5.749	6.700	1.000	.375	4.250												7.562	6.500				2.250	10.750	3.437	11.625
	5.500	4"-12 x 5.500	5 1/2"-12 x 5.500	5 1/4"-12 x 5.500	5 1/4"-12 x 10.000						6.249	7.125	1.000	.375	4.625												7.938	7.000				2.250	10.750	3.437	11.625
12.000	2.000	1 1/2"-12 x 2.250	2"-12 x 2.250	1 3/4"-12 x 2.250	1 3/4"-12 x 3.500	1.062	6.375	2.125	.375	.875	2.624	3.812	.875	.312	1.688	12.750	1	.625	2.250	2.000	.875	1.062	6.875	12.450	4.750	9.405	4.312	3.750	11.000	11.125	.750	2.000	11.000	3.187	11.875
	2.500	1 7/8"-12 x 3.000	2 1/2"-12 x 3.000	2 1/4"-12 x 3.000	2 1/4"-12 x 4.500						3.124	3.812	1.000	.312	2.062												4.312	3.750				2.250	11.250	3.437	12.125
	3.000	2 1/4"-12 x 3.500	3"-12 x 3.500	2 3/4"-12 x 3.500	2 3/4"-12 x 5.500						3.749	4.700	1.000	.375	2.625												5.562	4.500				2.250	11.250	3.437	12.125
	3.500	2 1/2"-12 x 3.500	3 1/2"-12 x 3.500	3 1/4"-12 x 3.500	3 1/4"-12 x 6.500						4.249	5.200	1.000	.375	3.000												6.062	5.000				2.250	11.250	3.437	12.125
	4.000	3"-12 x 4.000	4"-12 x 4.000	3 3/4"-12 x 4.000	3 3/4"-12 x 7.500						4.749	5.700	1.000	.375	3.375												6.562	5.500				2.250	11.250	3.437	12.125
	4.500	3 1/4"-12 x 4.500	4 1/2"-12 x 4.500	4 1/4"-12 x 4.500	4 1/4"-12 x 8.250						5.249	6.200	1.000	.375	3.875												7.062	6.000				2.250	11.250	3.437	12.125
	5.000	3 1/2"-12 x 5.000	5"-12 x 5.000	4 3/4"-12 x 5.000	4 3/4"-12 x 9.000						5.749	6.700	1.000	.375	4.250												7.562	6.500				2.250	11.250	3.437	12.125
	5.500	4"-12 x 5.500	5 1/2"-12 x 5.500	5 1/4"-12 x 5.500	5 1/4"-12 x 10.000						6.249	7.125	1.000	.375	4.625												7.938	7.000				2.250	11.250	3.437	12.125
14.000	2.500	1 7/8"-12 x 3.000	2 1/2"-12 x 3.000	2 1/4"-12 x 3.000	2 1/4"-12 x 4.500	1.312	7.375	2.4375	.375	1.062	3.124	3.812		.312	2.062	14.750	1 1/4	.625	2.750	2.250	1.000	1.250	8.125	14.450	5.625	10.889	4.312	3.750	12.625	13.000	.875	2.250	12.812	3.688	13.875
	3.000	2 1/4"-12 x 3.500	3"-12 x 3.500	2 3/4"-12 x 3.500	2 3/4"-12 x 5.500						3.749	4.700		.375	2.625												5.562	4.500							
	3.500	2 1/2"-12 x 3.500	3 1/2"-12 x 3.500	3 1/4"-12 x 3.500	3 1/4"-12 x 6.500						4.249	5.200		.375	3.000												6.062	5.000							
	4.000	3"-12 x 4.000	4"-12 x 4.000	3 3/4"-12 x 4.000	3 3/4"-12 x 7.500						4.749	5.700	1.000	.375	3.375												6.562	5.500							
	4.500	3 1/4"-12 x 4.500	4 1/2"-12 x 4.500	4 1/4"-12 x 4.500	4 1/4"-12 x 8.250						5.249	6.200		.375	3.875												7.062	6.000							
	5.000	3 1/2"-12 x 5.000	5"-12 x 5.000	4 3/4"-12 x 5.000	4 3/4"-12 x 9.000						5.749	6.700		.375	4.250												7.562	6.500							
	5.500	4"-12 x 5.500	5 1/2"-12 x 5.500	5 1/4"-12 x 5.500	5 1/4"-12 x 10.000						6.249	7.125		.375	4.625												7.938	7.000							
BORE	MM	KM & KF	KD	KI	KA	AB	AH	AL	AT	AW	B	BC	C	CS	D	E	EE	F	G	J	K	KN	LB	OD	P	R	RR	RS	S	SA	TR	WB	XA	Y	ZA

NEVA DESIGN

FILE: 2.13_LM13L2.dwg REV: 02/09/2010

27650 Groesbeck Hwy • Roseville, MI 48066-2759 • Phone 586.775.7211 • Fax 586.775.4545 • Toll Free 800.526.7968 • e-mail: sales@peninsularcylinders.com • www.peninsularcylinders.com

END LUGS

Medium Duty Aluminum Air Cylinder

Peninsular Mounting Style: **LM 14**

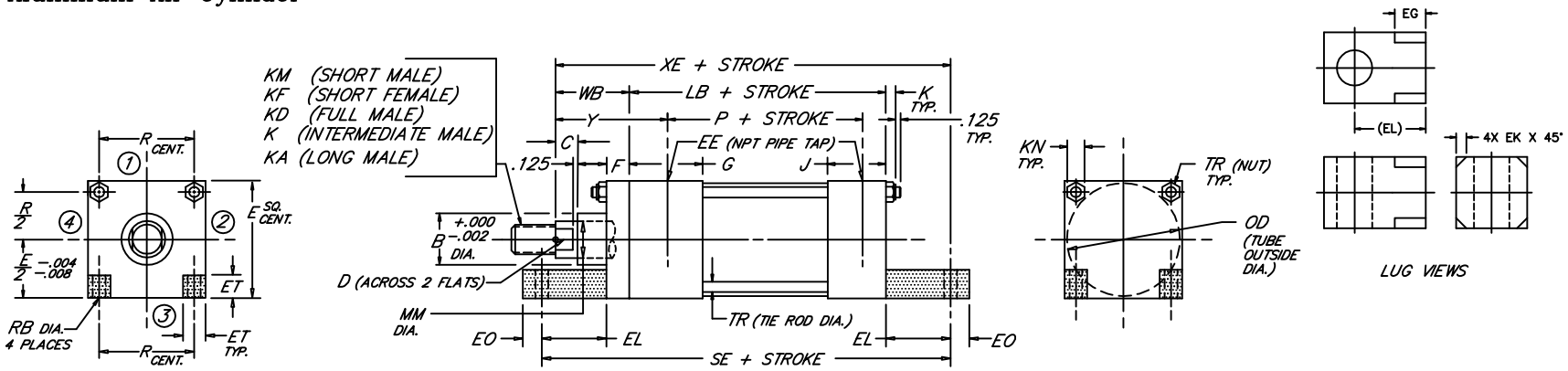

BORE	ROD MM	ROD THREAD X LENGTH KM & KF	KD	KI	KA	B	C	D	E	EE	NPT EG	EK	EL	EO	ET	F	G	J	K	KN	LB	OD	P	R	RB	SE	TR	WB	XE	Y
1.500	.625	7/16"-20 x .750	5/8"-18 x .750	1/2"-20 x .750	1/2"-20 x 1.125	1.124	.375	.500	2.000	3/8	---	---	.750	.250	.562	.375	1.500	1.000	.312	.438	3.625	1.750	2.335	1.428	.312	5.500	.250	1.000	5.375	1.875
	1.000	3/4"-16 x 1.125	1"-14 x 1.125	7/8"-14 x 1.125	7/8"-14 x 1.875	1.499	.500	.875			.620	.190																1.375	5.750	2.250
2.000	.625	7/16"-20 x .750	5/8"-18 x .750	1/2"-20 x .750	1/2"-20 x 1.125	1.124	.375	.500	2.500	3/8	---	---	.9375	.312	.625	.375	1.500	1.000	.344	.500	3.625	2.250	2.335	1.838	.375	5.875	.312	1.000	5.562	1.875
	1.000	3/4"-16 x 1.125	1"-14 x 1.125	7/8"-14 x 1.125	7/8"-14 x 1.875	1.499	.500	.875			---	---																1.375	5.938	2.250
	1.375	1"-14 x 1.625	1 3/8"-12 x 1.625	1 1/4"-12 x 1.625	1 1/4"-12 x 2.500	1.999	.625	1.125			.750	.190																1.625	6.188	2.500
2.500	.625	7/16"-20 x .750	5/8"-18 x .750	1/2"-20 x .750	1/2"-20 x 1.125	1.124	.375	.500	3.000	3/8	---	---	1.0625	.312	.781	.375	1.500	1.000	.344	.500	3.750	2.750	2.460	2.192	.375	6.250	.312	1.000	5.812	1.875
	1.000	3/4"-16 x 1.125	1"-14 x 1.125	7/8"-14 x 1.125	7/8"-14 x 1.875	1.499	.500	.875			---	---																1.375	6.188	2.250
	1.375	1"-14 x 1.625	1 3/8"-12 x 1.625	1 1/4"-12 x 1.625	1 1/4"-12 x 2.500	1.999	.625	1.125			---	---																1.625	6.438	2.500
	1.750	1 1/4"-12 x 2.000	1 3/4"-12 x 2.000	1 1/2"-12 x 2.000	1 1/2"-12 x 3.000	2.374	.750	1.500			.880	.250																1.875	6.688	2.750
3.250	1.000	3/4"-16 x 1.125	1"-14 x 1.125	7/8"-14 x 1.125	7/8"-14 x 1.875	1.499	.500	.875	3.750	1/2	---	---	.875	.375	1.000	.625	1.750	1.250	.438	.562	4.250	3.500	2.750	2.758	.438	6.625	.375	1.375	6.500	2.375
	1.375	1"-14 x 1.625	1 3/8"-12 x 1.625	1 1/4"-12 x 1.625	1 1/4"-12 x 2.500	1.999	.625	1.125			---	---																1.625	6.750	2.625
	1.750	1 1/4"-12 x 2.000	1 3/4"-12 x 2.000	1 1/2"-12 x 2.000	1 1/2"-12 x 3.000	2.374	.750	1.500			---	---																1.875	7.000	2.875
	2.000	1 1/2"-12 x 2.250	2"-12 x 2.250	1 3/4"-12 x 2.250	1 3/4"-12 x 3.500	2.624	.875	1.688			.620	.120																2.000	7.125	3.000
4.000	1.000	3/4"-16 x 1.125	1"-14 x 1.125	7/8"-14 x 1.125	7/8"-14 x 1.875	1.499	.500	.875	4.500	1/2	---	---	1.000	.375	1.188	.625	1.750	1.250	.438	.562	4.250	4.250	2.750	3.323	.438	6.875	.375	1.375	6.625	2.375
	1.375	1"-14 x 1.625	1 3/8"-12 x 1.625	1 1/4"-12 x 1.625	1 1/4"-12 x 2.500	1.999	.625	1.125			---	---																1.625	6.875	2.625
	1.750	1 1/4"-12 x 2.000	1 3/4"-12 x 2.000	1 1/2"-12 x 2.000	1 1/2"-12 x 3.000	2.374	.750	1.500			---	---																1.875	7.125	2.875
	2.000	1 1/2"-12 x 2.250	2"-12 x 2.250	1 3/4"-12 x 2.250	1 3/4"-12 x 3.500	2.624	.875	1.688			---	---																2.000	7.250	3.000
	2.500	1 7/8"-12 x 3.000	2 1/2"-12 x 3.000	2 1/4"-12 x 3.000	2 1/4"-12 x 4.500	3.124	1.000	2.062			.750	.090																2.250	7.500	3.250
5.000	1.000	3/4"-16 x 1.125	1"-14 x 1.125	7/8"-14 x 1.125	7/8"-14 x 1.875	1.499	.500	.875	5.500	1/2	---	---	1.0625	.500	1.375	.625	1.750	1.250	.594	.750	4.500	5.250	3.000	4.101	.562	7.250	.500	1.375	6.938	2.375
	1.375	1"-14 x 1.625	1 3/8"-12 x 1.625	1 1/4"-12 x 1.625	1 1/4"-12 x 2.500	1.999	.625	1.125			---	---																1.625	7.188	2.625
	1.750	1 1/4"-12 x 2.000	1 3/4"-12 x 2.000	1 1/2"-12 x 2.000	1 1/2"-12 x 3.000	2.374	.750	1.500			---	---																1.875	7.438	2.875
	2.000	1 1/2"-12 x 2.250	2"-12 x 2.250	1 3/4"-12 x 2.250	1 3/4"-12 x 3.500	2.624	.875	1.688			---	---																2.000	7.562	3.000
	2.500	1 7/8"-12 x 3.000	2 1/2"-12 x 3.000	2 1/4"-12 x 3.000	2 1/4"-12 x 4.500	3.124	1.000	2.062			---	---																2.250	7.812	3.250
	3.000	2 1/4"-12 x 3.500	3"-12 x 3.500	2 3/4"-12 x 3.500	2 3/4"-12 x 5.500	3.749	1.000	2.625			---	---																2.250	7.812	3.250
	3.500	2 1/2"-12 x 3.500	3 1/2"-12 x 3.500	3 1/4"-12 x 3.500	3 1/4"-12 x 6.500	4.249	1.000	3.000			.750	.280																2.250	7.812	3.250
6.000	1.375	1"-14 x 1.625	1 3/8"-12 x 1.625	1 1/4"-12 x 1.625	1 1/4"-12 x 2.500	1.999	.625	1.125	6.500	3/4	---	---	1.000	.500	1.625	.750	2.000	1.500	.594	.750	5.000	6.250	3.250	4.879	.562	7.750	.500	1.625	7.625	2.750
	1.750	1 1/4"-12 x 2.000	1 3/4"-12 x 2.000	1 1/2"-12 x 2.000	1 1/2"-12 x 3.000	2.374	.750	1.500			---	---																1.875	7.875	3.000
	2.000	1 1/2"-12 x 2.250	2"-12 x 2.250	1 3/4"-12 x 2.250	1 3/4"-12 x 3.500	2.624	.875	1.688			---	---																2.000	8.000	3.125
	2.500	1 7/8"-12 x 3.000	2 1/2"-12 x 3.000	2 1/4"-12 x 3.000	2 1/4"-12 x 4.500	3.124	1.000	2.062			---	---																2.250	8.250	3.375
	3.000	2 1/4"-12 x 3.500	3"-12 x 3.500	2 3/4"-12 x 3.500	2 3/4"-12 x 5.500	3.749	1.000	2.625			---	---																2.250	8.250	3.375
	3.500	2 1/2"-12 x 3.500	3 1/2"-12 x 3.500	3 1/4"-12 x 3.500	3 1/4"-12 x 6.500	4.249	1.000	3.000			---	---																2.250	8.250	3.375
	4.000	3"-12 x 4.000	4"-12 x 4.000	3 3/4"-12 x 4.000	3 3/4"-12 x 7.500	4.749	1.000	3.375			.620	.120																2.250	8.250	3.375
BORE	MM	KM & KF	KD	KI	KA	B	C	D	E	EE	EG	EK	EL	EO	ET	F	G	J	K	KN	LB	OD	P	R	RB	SE	TR	WB	XE	Y

NEVA DESIGN

FILE: 2.14_LM14S2.dwg REV: 02/09/2010

27650 Groesbeck Hwy • Roseville, MI 48066-2759 • Phone 586.775.7211 • Fax 586.775.4545 • Toll Free 800.526.7968 • e-mail: sales@peninsularcylinders.com • www.peninsularcylinders.com

END LUGS

Medium Duty Aluminum Air Cylinder

Peninsular Mounting Style: **LM 14**

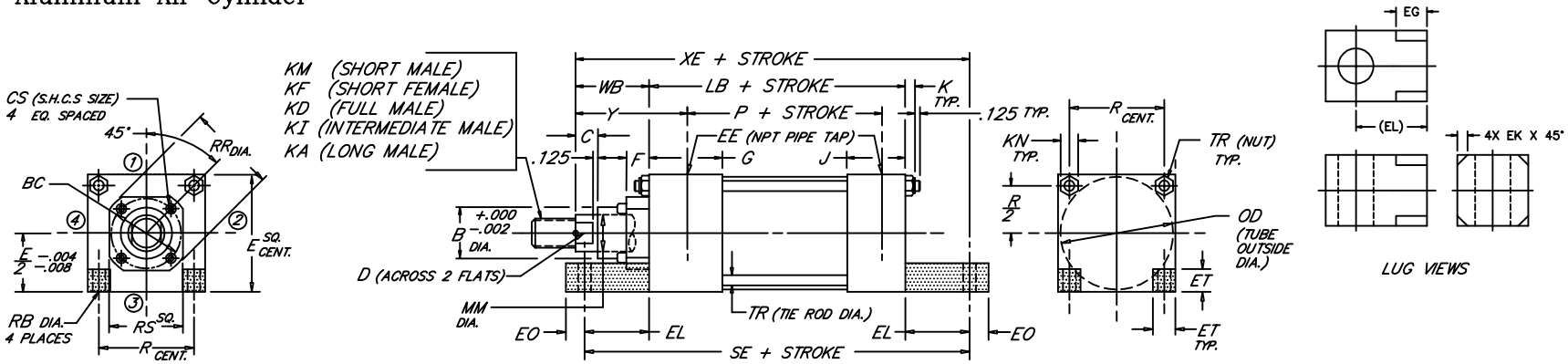

BORE	ROD MM	KM & KF	KD	KI	KA	B	BC	C	CS	D	E	NPT EE	EG	EK	EL	EO	ET	F	G	J	K	KN	LB	OD	P	R	RB	RR	RS	SE	TR	WB	XE	Y
		ROD THREAD X LENGTH																																
8.000	1.375	1"-14 x 1.625	1 3/8"-12 x 1.625	1 1/4"-12 x 1.625	1 1/4"-12 x 2.500	1.999	3.267	.625	.312	1.125	8.500	3/4	---	---	1.125	.625	2.062	.625	2.000	1.500	.750	.938	5.125	8.450	3.375	6.435	.688	3.734	3.000	7.375	.625	1.625	7.875	2.750
	1.750	1 1/4"-12 x 2.000	1 3/4"-12 x 2.000	1 1/2"-12 x 2.000	1 1/2"-12 x 3.000	2.374	3.267	.750	.312	1.500			---	---														3.734	3.000			1.875	8.125	3.000
	2.000	1 1/2"-12 x 2.250	2"-12 x 2.250	1 3/4"-12 x 2.250	1 3/4"-12 x 3.500	2.624	3.812	.875	.312	1.688			---	---														4.312	3.750			2.000	8.250	3.125
	2.500	1 7/8"-12 x 3.000	2 1/2"-12 x 3.000	2 1/4"-12 x 3.000	2 1/4"-12 x 4.500	3.124	3.812	1.000	.312	2.062			---	---														4.312	3.750			2.250	8.500	3.375
	3.000	2 1/4"-12 x 3.500	3"-12 x 3.500	2 3/4"-12 x 3.500	2 3/4"-12 x 5.500	3.749	4.700	1.000	.375	2.625			---	---														5.562	4.500			2.250	8.500	3.375
	3.500	2 1/2"-12 x 3.500	3 1/2"-12 x 3.500	3 1/4"-12 x 3.500	3 1/4"-12 x 6.500	4.249	5.200	1.000	.375	3.000			---	---														6.062	5.000			2.250	8.500	3.375
	4.000	3"-12 x 4.000	4"-12 x 4.000	3 3/4"-12 x 4.000	3 3/4"-12 x 7.500	4.749	5.700	1.000	.375	3.375			---	---														6.562	5.500			2.250	8.500	3.375
	4.500	3 1/4"-12 x 4.500	4 1/2"-12 x 4.500	4 1/4"-12 x 4.500	4 1/4"-12 x 8.250	5.249	6.200	1.000	.375	3.875			---	---														7.062	6.000			2.250	8.500	3.375
	5.000	3 1/2"-12 x 5.000	5"-12 x 5.000	4 3/4"-12 x 5.000	4 3/4"-12 x 9.000	5.749	6.700	1.000	.375	4.250			---	---														7.562	6.500			2.250	8.500	3.375
	5.500	4"-12 x 5.500	5 1/2"-12 x 5.500	5 1/4"-12 x 5.500	5 1/4"-12 x 10.000	6.249	7.125	1.000	.375	4.625			1.380	.060														7.938	7.000			2.250	8.500	3.375
10.000	1.750	1 1/4"-12 x 2.000	1 3/4"-12 x 2.000	1 1/2"-12 x 2.000	1 1/2"-12 x 3.000	2.374	3.812	.750	.312	1.500	10.625	1	---	---	1.3125	.625	2.688	.625	2.250	2.000	.875	1.062	6.375	10.450	4.250	7.920	.812	4.312	3.750	9.000	.750	1.875	9.562	3.062
	2.000	1 1/2"-12 x 2.250	2"-12 x 2.250	1 3/4"-12 x 2.250	1 3/4"-12 x 3.500	2.624	3.812	.875	.312	1.688																		4.312	3.750			2.000	9.688	3.187
	2.500	1 7/8"-12 x 3.000	2 1/2"-12 x 3.000	2 1/4"-12 x 3.000	2 1/4"-12 x 4.500	3.124	3.812	1.000	.312	2.062																		4.312	3.750			2.250	9.938	3.437
	3.000	2 1/4"-12 x 3.500	3"-12 x 3.500	2 3/4"-12 x 3.500	2 3/4"-12 x 5.500	3.749	4.700	1.000	.375	2.625																		5.562	4.500			2.250	9.938	3.437
	3.500	2 1/2"-12 x 3.500	3 1/2"-12 x 3.500	3 1/4"-12 x 3.500	3 1/4"-12 x 6.500	4.249	5.200	1.000	.375	3.000																		6.062	5.000			2.250	9.938	3.437
	4.000	3"-12 x 4.000	4"-12 x 4.000	3 3/4"-12 x 4.000	3 3/4"-12 x 7.500	4.749	5.700	1.000	.375	3.375																		6.562	5.500			2.250	9.938	3.437
	4.500	3 1/4"-12 x 4.500	4 1/2"-12 x 4.500	4 1/4"-12 x 4.500	4 1/4"-12 x 8.250	5.249	6.200	1.000	.375	3.875																		7.062	6.000			2.250	9.938	3.437
	5.000	3 1/2"-12 x 5.000	5"-12 x 5.000	4 3/4"-12 x 5.000	4 3/4"-12 x 9.000	5.749	6.700	1.000	.375	4.250																		7.562	6.500			2.250	9.938	3.437
	5.500	4"-12 x 5.500	5 1/2"-12 x 5.500	5 1/4"-12 x 5.500	5 1/4"-12 x 10.000	6.249	7.125	1.000	.375	4.625																		7.938	7.000			2.250	9.938	3.437
12.000	2.000	1 1/2"-12 x 2.250	2"-12 x 2.250	1 3/4"-12 x 2.250	1 3/4"-12 x 3.500	2.624	3.812	.875	.312	1.688	12.750	1	---	---	1.3125	.625	3.312	.625	2.250	2.000	.875	1.062	6.875	12.450	4.750	9.405	.812	4.312	3.750	9.500	.750	2.000	10.188	3.187
	2.500	1 7/8"-12 x 3.000	2 1/2"-12 x 3.000	2 1/4"-12 x 3.000	2 1/4"-12 x 4.500	3.124	3.812	1.000	.312	2.062																		4.312	3.750			2.250	10.438	3.437
	3.000	2 1/4"-12 x 3.500	3"-12 x 3.500	2 3/4"-12 x 3.500	2 3/4"-12 x 5.500	3.749	4.700	1.000	.375	2.625																		5.562	4.500			2.250	10.438	3.437
	3.500	2 1/2"-12 x 3.500	3 1/2"-12 x 3.500	3 1/4"-12 x 3.500	3 1/4"-12 x 6.500	4.249	5.200	1.000	.375	3.000																		6.062	5.000			2.250	10.438	3.437
	4.000	3"-12 x 4.000	4"-12 x 4.000	3 3/4"-12 x 4.000	3 3/4"-12 x 7.500	4.749	5.700	1.000	.375	3.375																		6.562	5.500			2.250	10.438	3.437
	4.500	3 1/4"-12 x 4.500	4 1/2"-12 x 4.500	4 1/4"-12 x 4.500	4 1/4"-12 x 8.250	5.249	6.200	1.000	.375	3.875																		7.062	6.000			2.250	10.438	3.437
	5.000	3 1/2"-12 x 5.000	5"-12 x 5.000	4 3/4"-12 x 5.000	4 3/4"-12 x 9.000	5.749	6.700	1.000	.375	4.250																		7.562	6.500			2.250	10.438	3.437
	5.500	4"-12 x 5.500	5 1/2"-12 x 5.500	5 1/4"-12 x 5.500	5 1/4"-12 x 10.000	6.249	7.125	1.000	.375	4.625																		7.938	7.000			2.250	10.438	3.437
14.000	2.500	1 7/8"-12 x 3.000	2 1/2"-12 x 3.000	2 1/4"-12 x 3.000	2 1/4"-12 x 4.500	3.124	3.812		.312	2.062	14.750	1 1/4	---	---	1.500	.750	3.812	.625	2.750	2.250	1.000	1.250	8.125	14.450	5.625	10.889	.938	4.312	3.750	11.125	.875	2.250	11.875	3.688
	3.000	2 1/4"-12 x 3.500	3"-12 x 3.500	2 3/4"-12 x 3.500	2 3/4"-12 x 5.500	3.749	4.700		.375	2.625																		5.562	4.500					
	3.500	2 1/2"-12 x 3.500	3 1/2"-12 x 3.500	3 1/4"-12 x 3.500	3 1/4"-12 x 6.500	4.249	5.200		.375	3.000																		6.062	5.000					
	4.000	3"-12 x 4.000	4"-12 x 4.000	3 3/4"-12 x 4.000	3 3/4"-12 x 7.500	4.749	5.700	1.000	.375	3.375																		6.562	5.500					
	4.500	3 1/4"-12 x 4.500	4 1/2"-12 x 4.500	4 1/4"-12 x 4.500	4 1/4"-12 x 8.250	5.249	6.200		.375	3.875																		7.062	6.000					
	5.000	3 1/2"-12 x 5.000	5"-12 x 5.000	4 3/4"-12 x 5.000	4 3/4"-12 x 9.000	5.749	6.700		.375	4.250																		7.562	6.500					
	5.500	4"-12 x 5.500	5 1/2"-12 x 5.500	5 1/4"-12 x 5.500	5 1/4"-12 x 10.000	6.249	7.125		.375	4.625																		7.938	7.000					
BORE	MM	KM & KF	KD	KI	KA	B	BC	C	CS	D	E	EE	EG	EK	EL	EO	ET	F	G	J	K	KN	LB	OD	P	R	RB	RR	RS	SE	TR	WB	XE	Y

NEWA DESIGN

FILE: 2.14_LM14L2.dwg REV: 02/09/2010

27650 Groesbeck Hwy • Roseville, MI 48066-2759 • Phone 586.775.7211 • Fax 586.775.4545 • Toll Free 800.526.7968 • e-mail: sales@peninsularcylinders.com • www.peninsularcylinders.com

CENTERLINE LUGS

Medium Duty Aluminum Air Cylinder

Peninsular Mounting Style: **LM 15**

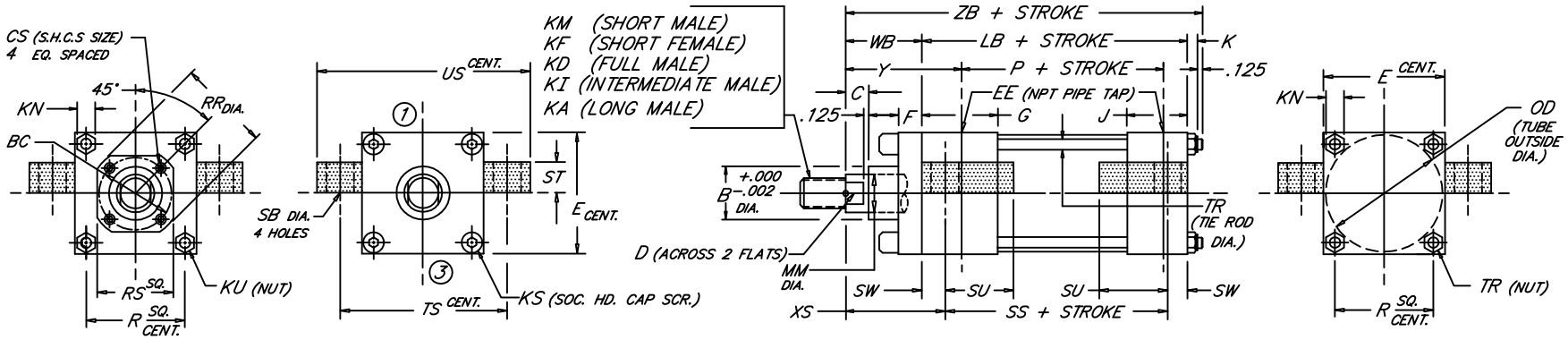

BORE	ROD MM	ROD THREAD X LENGTH KM & KF	KD	KI	KA	B	BC	C	CS	D	E	NPT EE	F	G	J	K	KN	KS	KU	LB	OD	P	R	RR	RS	SB	SS	ST	SU	SW	TR	TS	US	WB	XS	Y	ZB
1.500	.625	7/16"-20 x .750	5/8"-18 x .750	1/2"-20 x .750	1/2"-20 x 1.125	1.124	---	.375	---	.500	2.000	3/8	.375	1.500	1.000	.312	.438	.250	---	3.625	1.750	2.335	1.428	---	---	.438	2.875	.500	.938	.375	.250	2.750	3.500	1.000	1.375	1.875	5.062
	1.000	3/4"-16 x 1.125	1"-14 x 1.125	7/8"-14 x 1.125	7/8"-14 x 1.875	1.499		.500		.875																								1.375	1.750	2.250	5.437
2.000	.625	7/16"-20 x .750	5/8"-18 x .750	1/2"-20 x .750	1/2"-20 x 1.125	1.124	---	.375	---	.500	2.500	3/8	.375	1.500	1.000	.344	.500	.312	---	3.625	2.250	2.335	1.838	---	---	.438	2.875	.500	.938	.375	.312	3.250	4.000	1.000	1.375	1.875	5.094
	1.000	3/4"-16 x 1.125	1"-14 x 1.125	7/8"-14 x 1.125	7/8"-14 x 1.875	1.499		.500		.875																								1.375	1.750	2.250	5.469
	1.375	1"-14 x 1.625	1 3/8"-12 x 1.625	1 1/4"-12 x 1.625	1 1/4"-12 x 2.500	1.999		.625		1.125																								1.625	2.000	2.500	5.719
2.500	.625	7/16"-20 x .750	5/8"-18 x .750	1/2"-20 x .750	1/2"-20 x 1.125	1.124	---	.375	---	.500	3.000	3/8	.375	1.500	1.000	.344	.500	.312	---	3.750	2.750	2.460	2.192	---	---	.438	3.000	.500	.938	.375	.312	3.750	4.500	1.000	1.375	1.875	5.219
	1.000	3/4"-16 x 1.125	1"-14 x 1.125	7/8"-14 x 1.125	7/8"-14 x 1.875	1.499		.500		.875																								1.375	1.750	2.250	5.594
	1.375	1"-14 x 1.625	1 3/8"-12 x 1.625	1 1/4"-12 x 1.625	1 1/4"-12 x 2.500	1.999		.625		1.125																								1.625	2.000	2.500	5.844
	1.750	1 1/4"-12 x 2.000	1 3/4"-12 x 2.000	1 1/2"-12 x 2.000	1 1/2"-12 x 3.000	2.374		.750		1.500																								1.875	2.250	2.750	6.094
3.250	1.000	3/4"-16 x 1.125	1"-14 x 1.125	7/8"-14 x 1.125	7/8"-14 x 1.875	1.499	---	.500	---	.875	3.750	1/2	.625	1.750	1.250	.438	.562	.375	---	4.250	3.500	2.750	2.758	---	---	.562	3.250	.750	1.250	.500	.375	4.750	5.750	1.375	1.875	2.375	6.188
	1.375	1"-14 x 1.625	1 3/8"-12 x 1.625	1 1/4"-12 x 1.625	1 1/4"-12 x 2.500	1.999		.625		1.125																								1.625	2.125	2.625	6.438
	1.750	1 1/4"-12 x 2.000	1 3/4"-12 x 2.000	1 1/2"-12 x 2.000	1 1/2"-12 x 3.000	2.374		.750		1.500																								1.875	2.375	2.875	6.688
	2.000	1 1/2"-12 x 2.250	2"-12 x 2.250	1 3/4"-12 x 2.250	1 3/4"-12 x 3.500	2.624		.875		1.688																								2.000	2.500	3.000	6.813
4.000	1.000	3/4"-16 x 1.125	1"-14 x 1.125	7/8"-14 x 1.125	7/8"-14 x 1.875	1.499	2.562	.500	.250	.875	4.500	1/2	.625	1.750	1.250	.438	.562	---	.375	4.250	4.250	2.750	3.323	2.969	2.500	.562	3.250	.750	1.250	.500	.375	5.500	6.500	1.375	1.875	2.375	6.188
	1.375	1"-14 x 1.625	1 3/8"-12 x 1.625	1 1/4"-12 x 1.625	1 1/4"-12 x 2.500	1.999	2.562	.625	.250	1.125								---	.375					2.969	2.500									1.625	2.125	2.625	6.438
	1.750	1 1/4"-12 x 2.000	1 3/4"-12 x 2.000	1 1/2"-12 x 2.000	1 1/2"-12 x 3.000	2.374	3.267	.750	.312	1.500								---	.375					3.734	3.000									1.875	2.375	2.875	6.688
	2.000	1 1/2"-12 x 2.250	2"-12 x 2.250	1 3/4"-12 x 2.250	1 3/4"-12 x 3.500	2.624	---	.875	---	1.688								.375	---					---	---									2.000	2.500	3.000	6.813
	2.500	1 7/8"-12 x 3.000	2 1/2"-12 x 3.000	2 1/4"-12 x 3.000	2 1/4"-12 x 4.500	3.124	---	1.000	---	2.062								.375	---					---	---									2.250	2.750	3.250	7.063
5.000	1.000	3/4"-16 x 1.125	1"-14 x 1.125	7/8"-14 x 1.125	7/8"-14 x 1.875	1.499	2.562	.500	.250	.875	5.500	1/2	.625	1.750	1.250	.594	.750	---	.500	4.500	5.250	3.000	4.101	2.969	2.500	.812	3.125	1.000	1.562	.6875	.500	6.875	8.250	1.375	2.062	2.375	6.594
	1.375	1"-14 x 1.625	1 3/8"-12 x 1.625	1 1/4"-12 x 1.625	1 1/4"-12 x 2.500	1.999	2.562	.625	.250	1.125								---	.500					2.969	2.500									1.625	2.312	2.625	6.844
	1.750	1 1/4"-12 x 2.000	1 3/4"-12 x 2.000	1 1/2"-12 x 2.000	1 1/2"-12 x 3.000	2.374	3.267	.750	.312	1.500								---	.500					3.734	3.000									1.875	2.562	2.875	7.094
	2.000	1 1/2"-12 x 2.250	2"-12 x 2.250	1 3/4"-12 x 2.250	1 3/4"-12 x 3.500	2.624	3.812	.875	.312	1.688								---	.500					4.312	3.750									2.000	2.688	3.000	7.219
	2.500	1 7/8"-12 x 3.000	2 1/2"-12 x 3.000	2 1/4"-12 x 3.000	2 1/4"-12 x 4.500	3.124	3.812	1.000	.312	2.062								---	.500					4.312	3.750									2.250	2.938	3.250	7.469
	3.000	2 1/4"-12 x 3.500	3"-12 x 3.500	2 3/4"-12 x 3.500	2 3/4"-12 x 5.500	3.749	---	1.000	---	2.625								.500	---					---	---									2.250	2.938	3.250	7.469
	3.500	2 1/2"-12 x 3.500	3 1/2"-12 x 3.500	3 1/4"-12 x 3.500	3 1/4"-12 x 6.500	4.249	---	1.000	---	3.000								.500	---					---	---									2.250	2.938	3.250	7.469
6.000	1.375	1"-14 x 1.625	1 3/8"-12 x 1.625	1 1/4"-12 x 1.625	1 1/4"-12 x 2.500	1.999	3.267	.625	.312	1.125	6.500	3/4	.625	2.000	1.500	.594	.750	---	.500	5.000	6.250	3.250	4.879	3.734	3.000	.812	3.625	1.000	1.562	.6875	.500	7.875	9.250	1.625	2.312	2.750	7.344
	1.750	1 1/4"-12 x 2.000	1 3/4"-12 x 2.000	1 1/2"-12 x 2.000	1 1/2"-12 x 3.000	2.374	3.267	.750	.312	1.500			.625					---	.500					3.734	3.000									1.875	2.562	3.000	7.594
	2.000	1 1/2"-12 x 2.250	2"-12 x 2.250	1 3/4"-12 x 2.250	1 3/4"-12 x 3.500	2.624	3.812	.875	.312	1.688			.625					---	.500					4.312	3.750									2.000	2.688	3.125	7.719
	2.500	1 7/8"-12 x 3.000	2 1/2"-12 x 3.000	2 1/4"-12 x 3.000	2 1/4"-12 x 4.500	3.124	3.812	1.000	.312	2.062			.625					---	.500					4.312	3.750									2.250	2.938	3.375	7.969
	3.000	2 1/4"-12 x 3.500	3"-12 x 3.500	2 3/4"-12 x 3.500	2 3/4"-12 x 5.500	3.749	4.700	1.000	.375	2.625			.625					---	.500					5.562	4.500									2.250	2.938	3.375	7.969
	3.500	2 1/2"-12 x 3.500	3 1/2"-12 x 3.500	3 1/4"-12 x 3.500	3 1/4"-12 x 6.500	4.249	5.200	1.000	.375	3.000			.625					---	.500					6.062	5.000									2.250	2.938	3.375	7.969
	4.000	3"-12 x 4.000	4"-12 x 4.000	3 3/4"-12 x 4.000	3 3/4"-12 x 7.500	4.749	---	1.000	---	3.375			.750					.500	---					---	---									2.250	2.938	3.375	7.969

NEVA DESIGN

2.15

FILE: 2.15_LM15S2.dwg REV: 02/09/2010

27650 Groesbeck Hwy • Roseville, MI 48066-2759 • Phone 586.775.7211 • Fax 586.775.4545 • Toll Free 800.526.7968 • e-mail: sales@peninsularcylinders.com • www.peninsularcylinders.com

CENTERLINE LUGS

Medium Duty Aluminum Air Cylinder

Peninsular Mounting Style: **LM 15**

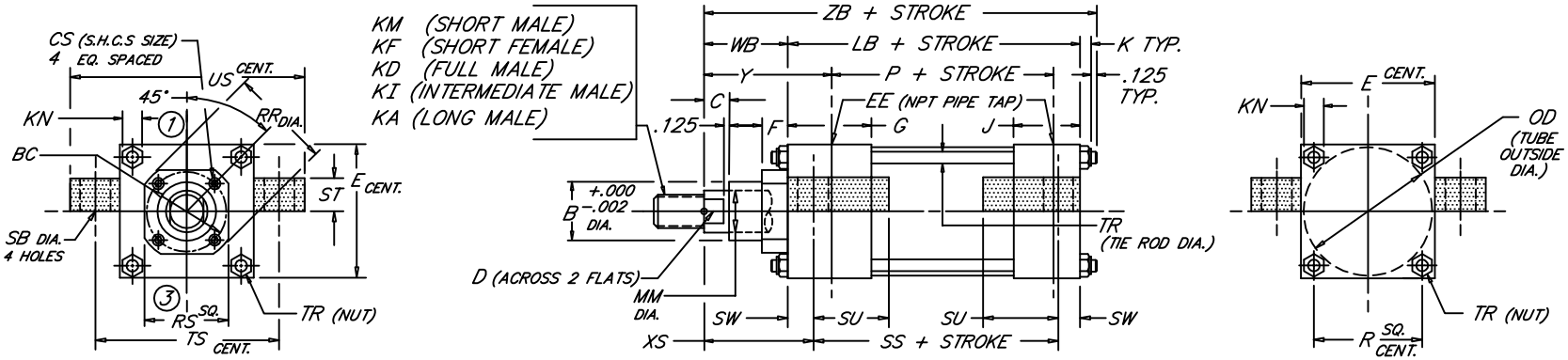

BORE	ROD MM	ROD THREAD X LENGTH KM & KF	KD	KI	KA	B	BC	C	CS	D	E	NPT EE	F	G	J	K	KN	LB	OD	P	R	RR	RS	SB	SS	ST	SU	SW	TR	TS	US	WB	XS	Y	ZB
8.000	1.375	1"-14 x 1.625	1 3/8"-12 x 1.625	1 1/4"-12 x 1.625	1 1/4"-12 x 2.500	1.999	3.267	.625	.312	1.125	8.500	3/4	.625	2.000	1.500	.750	.938	5.125	8.450	3.375	6.435	3.734	3.000	.812	3.750	1.000	1.562	.6875	.625	9.875	11.250	1.625	2.313	2.750	7.625
	1.750	1 1/4"-12 x 2.000	1 3/4"-12 x 2.000	1 1/2"-12 x 2.000	1 1/2"-12 x 3.000	2.374	3.267	.750	.312	1.500												3.734	3.000									1.875	2.562	3.000	7.875
	2.000	1 1/2"-12 x 2.250	2"-12 x 2.250	1 3/4"-12 x 2.250	1 3/4"-12 x 3.500	2.624	3.812	.875	.312	1.688												4.312	3.750									2.000	2.688	3.125	8.000
	2.500	1 7/8"-12 x 3.000	2 1/2"-12 x 3.000	2 1/4"-12 x 3.000	2 1/4"-12 x 4.500	3.124	3.812	1.000	.312	2.062												4.312	3.750									2.250	2.938	3.375	8.250
	3.000	2 1/4"-12 x 3.500	3"-12 x 3.500	2 3/4"-12 x 3.500	2 3/4"-12 x 5.500	3.749	4.700	1.000	.375	2.625												5.562	4.500									2.250	2.938	3.375	8.250
	3.500	2 1/2"-12 x 3.500	3 1/2"-12 x 3.500	3 1/4"-12 x 3.500	3 1/4"-12 x 6.500	4.249	5.200	1.000	.375	3.000												6.062	5.000									2.250	2.938	3.375	8.250
	4.000	3"-12 x 4.000	4"-12 x 4.000	3 3/4"-12 x 4.000	3 3/4"-12 x 7.500	4.749	5.700	1.000	.375	3.375												6.562	5.500									2.250	2.938	3.375	8.250
	4.500	3 1/4"-12 x 4.500	4 1/2"-12 x 4.500	4 1/4"-12 x 4.500	4 1/4"-12 x 8.250	5.249	6.200	1.000	.375	3.875												7.062	6.000									2.250	2.938	3.375	8.250
	5.000	3 1/2"-12 x 5.000	5"-12 x 5.000	4 3/4"-12 x 5.000	4 3/4"-12 x 9.000	5.749	6.700	1.000	.375	4.250												7.562	6.500									2.250	2.938	3.375	8.250
	5.500	4"-12 x 5.500	5 1/2"-12 x 5.500	5 1/4"-12 x 5.500	5 1/4"-12 x 10.000	6.249	7.125	1.000	.375	4.625												7.938	7.000									2.250	2.938	3.375	8.250
10.000	1.750	1 1/4"-12 x 2.000	1 3/4"-12 x 2.000	1 1/2"-12 x 2.000	1 1/2"-12 x 3.000	2.374	3.812	.750	.312	1.500	10.625	1	.625	2.250	2.000	.875	1.062	6.375	10.450	4.250	7.920	4.312	3.750	1.062	4.625	1.250	2.000	.875	.750	12.375	14.125	1.875	2.750	3.062	9.250
	2.000	1 1/2"-12 x 2.250	2"-12 x 2.250	1 3/4"-12 x 2.250	1 3/4"-12 x 3.500	2.624	3.812	.875	.312	1.688												4.312	3.750									2.000	2.875	3.187	9.375
	2.500	1 7/8"-12 x 3.000	2 1/2"-12 x 3.000	2 1/4"-12 x 3.000	2 1/4"-12 x 4.500	3.124	3.812	1.000	.312	2.062												4.312	3.750									2.250	3.125	3.437	9.625
	3.000	2 1/4"-12 x 3.500	3"-12 x 3.500	2 3/4"-12 x 3.500	2 3/4"-12 x 5.500	3.749	4.700	1.000	.375	2.625												5.562	4.500									2.250	3.125	3.437	9.625
	3.500	2 1/2"-12 x 3.500	3 1/2"-12 x 3.500	3 1/4"-12 x 3.500	3 1/4"-12 x 6.500	4.249	5.200	1.000	.375	3.000												6.062	5.000									2.250	3.125	3.437	9.625
	4.000	3"-12 x 4.000	4"-12 x 4.000	3 3/4"-12 x 4.000	3 3/4"-12 x 7.500	4.749	5.700	1.000	.375	3.375												6.562	5.500									2.250	3.125	3.437	9.625
	4.500	3 1/4"-12 x 4.500	4 1/2"-12 x 4.500	4 1/4"-12 x 4.500	4 1/4"-12 x 8.250	5.249	6.200	1.000	.375	3.875												7.062	6.000									2.250	3.125	3.437	9.625
	5.000	3 1/2"-12 x 5.000	5"-12 x 5.000	4 3/4"-12 x 5.000	4 3/4"-12 x 9.000	5.749	6.700	1.000	.375	4.250												7.562	6.500									2.250	3.125	3.437	9.625
	5.500	4"-12 x 5.500	5 1/2"-12 x 5.500	5 1/4"-12 x 5.500	5 1/4"-12 x 10.000	6.249	7.125	1.000	.375	4.625												7.938	7.000									2.250	3.125	3.437	9.625
12.000	2.000	1 1/2"-12 x 2.250	2"-12 x 2.250	1 3/4"-12 x 2.250	1 3/4"-12 x 3.500	2.624	3.812	.875	.312	1.688	12.750	1	.625	2.250	2.000	.875	1.062	6.875	12.450	4.750	9.405	4.312	3.750	1.062	5.125	1.250	2.000	.875	.750	14.500	16.250	2.000	2.875	3.187	9.875
	2.500	1 7/8"-12 x 3.000	2 1/2"-12 x 3.000	2 1/4"-12 x 3.000	2 1/4"-12 x 4.500	3.124	3.812	1.000	.312	2.062												4.312	3.750									2.250	3.125	3.437	10.125
	3.000	2 1/4"-12 x 3.500	3"-12 x 3.500	2 3/4"-12 x 3.500	2 3/4"-12 x 5.500	3.749	4.700	1.000	.375	2.625												5.562	4.500									2.250	3.125	3.437	10.125
	3.500	2 1/2"-12 x 3.500	3 1/2"-12 x 3.500	3 1/4"-12 x 3.500	3 1/4"-12 x 6.500	4.249	5.200	1.000	.375	3.000												6.062	5.000									2.250	3.125	3.437	10.125
	4.000	3"-12 x 4.000	4"-12 x 4.000	3 3/4"-12 x 4.000	3 3/4"-12 x 7.500	4.749	5.700	1.000	.375	3.375												6.562	5.500									2.250	3.125	3.437	10.125
	4.500	3 1/4"-12 x 4.500	4 1/2"-12 x 4.500	4 1/4"-12 x 4.500	4 1/4"-12 x 8.250	5.249	6.200	1.000	.375	3.875												7.062	6.000									2.250	3.125	3.437	10.125
	5.000	3 1/2"-12 x 5.000	5"-12 x 5.000	4 3/4"-12 x 5.000	4 3/4"-12 x 9.000	5.749	6.700	1.000	.375	4.250												7.562	6.500									2.250	3.125	3.437	10.125
	5.500	4"-12 x 5.500	5 1/2"-12 x 5.500	5 1/4"-12 x 5.500	5 1/4"-12 x 10.000	6.249	7.125	1.000	.375	4.625												7.938	7.000									2.250	3.125	3.437	10.125
14.000	2.500	1 7/8"-12 x 3.000	2 1/2"-12 x 3.000	2 1/4"-12 x 3.000	2 1/4"-12 x 4.500	3.124	3.812		.312	2.062	14.750	1 1/4	.625	2.750	2.250	1.000	1.250	8.125	14.450	5.625	10.889	4.312	3.750	1.312	5.875	1.500	2.500	1.125	.875	17.000	19.250	2.250	3.375	3.688	11.500
	3.000	2 1/4"-12 x 3.500	3"-12 x 3.500	2 3/4"-12 x 3.500	2 3/4"-12 x 5.500	3.749	4.700		.375	2.625												5.562	4.500												
	3.500	2 1/2"-12 x 3.500	3 1/2"-12 x 3.500	3 1/4"-12 x 3.500	3 1/4"-12 x 6.500	4.249	5.200		.375	3.000												6.062	5.000												
	4.000	3"-12 x 4.000	4"-12 x 4.000	3 3/4"-12 x 4.000	3 3/4"-12 x 7.500	4.749	5.700		.375	3.375												6.562	5.500												
	4.500	3 1/4"-12 x 4.500	4 1/2"-12 x 4.500	4 1/4"-12 x 4.500	4 1/4"-12 x 8.250	5.249	6.200		.375	3.875												7.062	6.000												
	5.000	3 1/2"-12 x 5.000	5"-12 x 5.000	4 3/4"-12 x 5.000	4 3/4"-12 x 9.000	5.749	6.700		.375	4.250												7.562	6.500												
	5.500	4"-12 x 5.500	5 1/2"-12 x 5.500	5 1/4"-12 x 5.500	5 1/4"-12 x 10.000	6.249	7.125		.375	4.625												7.938	7.000												
BORE	MM	KM & KF	KD	KI	KA	B	BC	C	CS	D	E	EE	F	G	J	K	KN	LB	OD	P	R	RR	RS	SB	SS	ST	SU	SW	TR	TS	US	WB	XS	Y	ZB

NEVA DESIGN

FILE: 2.15_LM15L2.dwg REV: 02/09/2010

27650 Groesbeck Hwy • Roseville, MI 48066-2759 • Phone 586.775.7211 • Fax 586.775.4545 • Toll Free 800.526.7968 • e-mail: sales@peninsularcylinders.com • www.peninsularcylinders.com

SIDE TAPPED

Medium Duty Aluminum Air Cylinder

Peninsular Mounting Style: **LM 16**

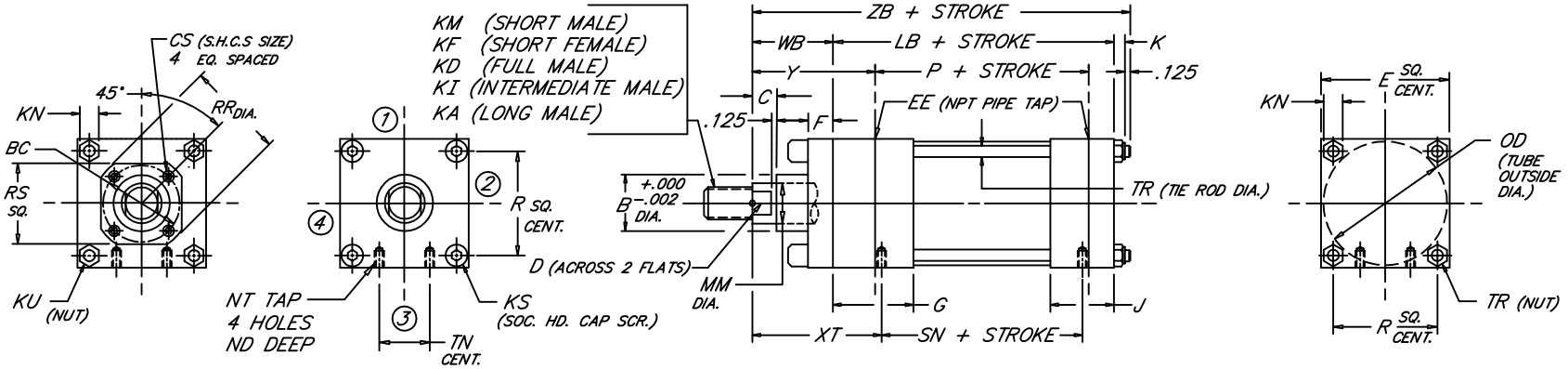

BORE	ROD MM	ROD THREAD X LENGTH KM & KF	KD	KI	KA	B	BC	C	CS	D	E	NPT EE	F	G	J	K	KN	KS	KU	LB	ND	NT	OD	P	R	RR	RS	SN	TN	TR	WB	XT	Y	ZB
1.500	.625	7/16"-20 x .750	5/8"-18 x .750	1/2"-20 x .750	1/2"-20 x 1.125	1.124	---	.375	---	.500	2.000	3/8	.375	1.500	1.000	.312	.438	.250	---	3.625	.375	1/4"-20	1.750	2.335	1.428	---	---	2.250	.625	.250	1.000	1.938	1.875	5.062
	1.000	3/4"-16 x 1.125	1"-14 x 1.125	7/8"-14 x 1.125	7/8"-14 x 1.875	1.499		.500		.875											.281										1.375	2.312	2.250	5.437
2.000	.625	7/16"-20 x .750	5/8"-18 x .750	1/2"-20 x .750	1/2"-20 x 1.125	1.124	---	.375	---	.500	2.500	3/8	.375	1.500	1.000	.344	.500	.312	---	3.625	.344	5/16"-18	2.250	2.335	1.838	---	---	2.250	.875	.312	1.000	1.938	1.875	5.094
	1.000	3/4"-16 x 1.125	1"-14 x 1.125	7/8"-14 x 1.125	7/8"-14 x 1.875	1.499		.500		.875																					1.375	2.312	2.250	5.469
	1.375	1"-14 x 1.625	1 3/8"-12 x 1.625	1 1/4"-12 x 1.625	1 1/4"-12 x 2.500	1.999		.625		1.125																					1.625	2.562	2.500	5.719
2.500	.625	7/16"-20 x .750	5/8"-18 x .750	1/2"-20 x .750	1/2"-20 x 1.125	1.124	---	.375	---	.500	3.000	3/8	.375	1.500	1.000	.344	.500	.312	---	3.750	.438	3/8"-16	2.750	2.460	2.192	---	---	2.375	1.250	.312	1.000	1.938	1.875	5.219
	1.000	3/4"-16 x 1.125	1"-14 x 1.125	7/8"-14 x 1.125	7/8"-14 x 1.875	1.499		.500		.875																					1.375	2.312	2.250	5.594
	1.375	1"-14 x 1.625	1 3/8"-12 x 1.625	1 1/4"-12 x 1.625	1 1/4"-12 x 2.500	1.999		.625		1.125																					1.625	2.562	2.500	5.844
	1.750	1 1/4"-12 x 2.000	1 3/4"-12 x 2.000	1 1/2"-12 x 2.000	1 1/2"-12 x 3.000	2.374		.750		1.500																					1.875	2.812	2.750	6.094
3.250	1.000	3/4"-16 x 1.125	1"-14 x 1.125	7/8"-14 x 1.125	7/8"-14 x 1.875	1.499	---	.500	---	.875	3.750	1/2	.625	1.750	1.250	.438	.562	.375	---	4.250	.500	1/2"-13	3.500	2.750	2.758	---	---	2.625	1.500	.375	1.375	2.438	2.375	6.188
	1.375	1"-14 x 1.625	1 3/8"-12 x 1.625	1 1/4"-12 x 1.625	1 1/4"-12 x 2.500	1.999		.625		1.125																					1.625	2.688	2.625	6.438
	1.750	1 1/4"-12 x 2.000	1 3/4"-12 x 2.000	1 1/2"-12 x 2.000	1 1/2"-12 x 3.000	2.374		.750		1.500																					1.875	2.938	2.875	6.688
	2.000	1 1/2"-12 x 2.250	2"-12 x 2.250	1 3/4"-12 x 2.250	1 3/4"-12 x 3.500	2.624		.875		1.688																					2.000	3.062	3.000	6.813
4.000	1.000	3/4"-16 x 1.125	1"-14 x 1.125	7/8"-14 x 1.125	7/8"-14 x 1.875	1.499	2.562	.500	.250	.875	4.500	1/2	.625	1.750	1.250	.438	.562	---	.375	4.250	.625	1/2"-13	4.250	2.750	3.323	2.969	2.500	2.625	2.062	.375	1.375	2.438	2.375	6.188
	1.375	1"-14 x 1.625	1 3/8"-12 x 1.625	1 1/4"-12 x 1.625	1 1/4"-12 x 2.500	1.999	2.562	.625	.250	1.125								---	.375							2.969	2.500				1.625	2.688	2.625	6.438
	1.750	1 1/4"-12 x 2.000	1 3/4"-12 x 2.000	1 1/2"-12 x 2.000	1 1/2"-12 x 3.000	2.374	3.267	.750	.312	1.500								---	.375							3.734	3.000				1.875	2.938	2.875	6.688
	2.000	1 1/2"-12 x 2.250	2"-12 x 2.250	1 3/4"-12 x 2.250	1 3/4"-12 x 3.500	2.624	---	.875	---	1.688								.375	---							---	---				2.000	3.062	3.000	6.813
	2.500	1 7/8"-12 x 3.000	2 1/2"-12 x 3.000	2 1/4"-12 x 3.000	2 1/4"-12 x 4.500	3.124	---	1.000	---	2.062								.375	---							---	---				2.250	3.312	3.250	7.063
5.000	1.000	3/4"-16 x 1.125	1"-14 x 1.125	7/8"-14 x 1.125	7/8"-14 x 1.875	1.499	2.562	.500	.250	.875	5.500	1/2	.625	1.750	1.250	.594	.750	---	.500	4.500	.750	5/8"-11	5.250	3.000	4.101	2.969	2.500	2.875	2.688	.500	1.375	2.438	2.375	6.594
	1.375	1"-14 x 1.625	1 3/8"-12 x 1.625	1 1/4"-12 x 1.625	1 1/4"-12 x 2.500	1.999	2.562	.625	.250	1.125								---	.500							2.969	2.500				1.625	2.688	2.625	6.844
	1.750	1 1/4"-12 x 2.000	1 3/4"-12 x 2.000	1 1/2"-12 x 2.000	1 1/2"-12 x 3.000	2.374	3.267	.750	.312	1.500								---	.500							3.734	3.000				1.875	2.938	2.875	7.094
	2.000	1 1/2"-12 x 2.250	2"-12 x 2.250	1 3/4"-12 x 2.250	1 3/4"-12 x 3.500	2.624	3.812	.875	.312	1.688								---	.500							4.312	3.750				2.000	3.062	3.000	7.219
	2.500	1 7/8"-12 x 3.000	2 1/2"-12 x 3.000	2 1/4"-12 x 3.000	2 1/4"-12 x 4.500	3.124	3.812	1.000	.312	2.062								---	.500							4.312	3.750				2.250	3.312	3.250	7.469
	3.000	2 1/4"-12 x 3.500	3"-12 x 3.500	2 3/4"-12 x 3.500	2 3/4"-12 x 5.500	3.749	---	1.000	---	2.625								.500	---							---	---				2.250	3.312	3.250	7.469
	3.500	2 1/2"-12 x 3.500	3 1/2"-12 x 3.500	3 1/4"-12 x 3.500	3 1/4"-12 x 6.500	4.249	---	1.000	---	3.000								.500	---							---	---				2.250	3.312	3.250	7.469
6.000	1.375	1"-14 x 1.625	1 3/8"-12 x 1.625	1 1/4"-12 x 1.625	1 1/4"-12 x 2.500	1.999	3.267	.625	.312	1.125	6.500	3/4	.625	2.000	1.500	.594	.750	---	.500	5.000	.875	3/4"-10	6.250	3.250	4.879	3.734	3.000	3.125	3.250	.500	1.625	2.812	2.750	7.344
	1.750	1 1/4"-12 x 2.000	1 3/4"-12 x 2.000	1 1/2"-12 x 2.000	1 1/2"-12 x 3.000	2.374	3.267	.750	.312	1.500			.625					---	.500							3.734	3.000				1.875	3.062	3.000	7.594
	2.000	1 1/2"-12 x 2.250	2"-12 x 2.250	1 3/4"-12 x 2.250	1 3/4"-12 x 3.500	2.624	3.812	.875	.312	1.688			.625					---	.500							4.312	3.750				2.000	3.188	3.125	7.719
	2.500	1 7/8"-12 x 3.000	2 1/2"-12 x 3.000	2 1/4"-12 x 3.000	2 1/4"-12 x 4.500	3.124	3.812	1.000	.312	2.062			.625					---	.500							4.312	3.750				2.250	3.438	3.375	7.969
	3.000	2 1/4"-12 x 3.500	3"-12 x 3.500	2 3/4"-12 x 3.500	2 3/4"-12 x 5.500	3.749	4.700	1.000	.375	2.625			.625					---	.500							5.562	4.500				2.250	3.438	3.375	7.969
	3.500	2 1/2"-12 x 3.500	3 1/2"-12 x 3.500	3 1/4"-12 x 3.500	3 1/4"-12 x 6.500	4.249	5.200	1.000	.375	3.000			.625					---	.500							6.062	5.000				2.250	3.438	3.375	7.969
	4.000	3"-12 x 4.000	4"-12 x 4.000	3 3/4"-12 x 4.000	3 3/4"-12 x 7.500	4.749	---	1.000	---	3.375			.750					.500	---							---	---				2.250	3.438	3.375	7.969
BORE	MM	KM & KF	KD	KI	KA	B	BC	C	CS	D	E	EE	F	G	J	K	KN	KS	KU	LB	ND	NT	OD	P	R	RR	RS	SN	TN	TR	WB	XT	Y	ZB

NEVA DESIGN

FILE: 2.16_LM16S2.dwg REV: 02/09/2010

27650 Groesbeck Hwy • Roseville, MI 48066-2759 • Phone 586.775.7211 • Fax 586.775.4545 • Toll Free 800.526.7968 • e-mail: sales@peninsularcylinders.com • www.peninsularcylinders.com

SIDE TAPPED

Medium Duty Aluminum Air Cylinder

Peninsular Mounting Style: **LM 16**

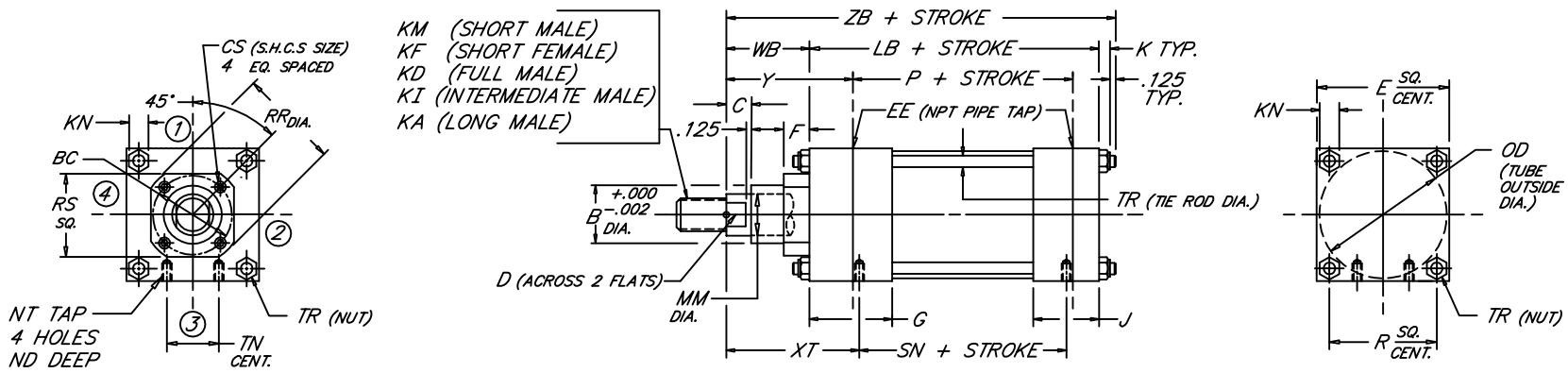

BORE	ROD MM	ROD THREAD X LENGTH KM & KF	KD	KI	KA	B	BC	C	CS	D	E	NPT EE	F	G	J	K	KN	LB	ND	NT	OD	P	R	RR	RS	SN	TN	TR	WB	XT	Y	ZB
8.000	1.375	1"-14 x 1.625	1 3/8"-12 x 1.625	1 1/4"-12 x 1.625	1 1/4"-12 x 2.500	1.999	3.267	.625	.312	1.125	8.500	3/4	.625	2.000	1.500	.750	.938	5.125	1.125	3/4"-10	8.450	3.375	6.435	3.734	3.000	3.250	4.500	.625	1.625	2.812	2.750	7.625
	1.750	1 1/4"-12 x 2.000	1 3/4"-12 x 2.000	1 1/2"-12 x 2.000	1 1/2"-12 x 3.000	2.374	3.267	.750	.312	1.500														3.734	3.000				1.875	3.062	3.000	7.875
	2.000	1 1/2"-12 x 2.250	2"-12 x 2.250	1 3/4"-12 x 2.250	1 3/4"-12 x 3.500	2.624	3.812	.875	.312	1.688														4.312	3.750				2.000	3.188	3.125	8.000
	2.500	1 7/8"-12 x 3.000	2 1/2"-12 x 3.000	2 1/4"-12 x 3.000	2 1/4"-12 x 4.500	3.124	3.812	1.000	.312	2.062														4.312	3.750				2.250	3.438	3.375	8.250
	3.000	2 1/4"-12 x 3.500	3"-12 x 3.500	2 3/4"-12 x 3.500	2 3/4"-12 x 5.500	3.749	4.700	1.000	.375	2.625														5.562	4.500				2.250	3.438	3.375	8.250
	3.500	2 1/2"-12 x 3.500	3 1/2"-12 x 3.500	3 1/4"-12 x 3.500	3 1/4"-12 x 6.500	4.249	5.200	1.000	.375	3.000														6.062	5.000				2.250	3.138	3.375	8.250
	4.000	3"-12 x 4.000	4"-12 x 4.000	3 3/4"-12 x 4.000	3 3/4"-12 x 7.500	4.749	5.700	1.000	.375	3.375														6.562	5.500				2.250	3.438	3.375	8.250
	4.500	3 1/4"-12 x 4.500	4 1/2"-12 x 4.500	4 1/4"-12 x 4.500	4 1/4"-12 x 8.250	5.249	6.200	1.000	.375	3.875														7.062	6.000				2.250	3.438	3.375	8.250
	5.000	3 1/2"-12 x 5.000	5"-12 x 5.000	4 3/4"-12 x 5.000	4 3/4"-12 x 9.000	5.749	6.700	1.000	.375	4.250														7.562	6.500				2.250	3.438	3.375	8.250
	5.500	4"-12 x 5.500	5 1/2"-12 x 5.500	5 1/4"-12 x 5.500	5 1/4"-12 x 10.000	6.249	7.125	1.000	.375	4.625														7.938	7.000				2.250	3.438	3.375	8.250
10.000	1.750	1 1/4"-12 x 2.000	1 3/4"-12 x 2.000	1 1/2"-12 x 2.000	1 1/2"-12 x 3.000	2.374	3.812	.750	.312	1.500	10.625	1	.625	2.250	2.000	.875	1.062	6.375	1.500	1"-8	10.450	4.250	7.920	4.312	3.750	4.125	5.500	.750	1.875	3.125	3.062	9.250
	2.000	1 1/2"-12 x 2.250	2"-12 x 2.250	1 3/4"-12 x 2.250	1 3/4"-12 x 3.500	2.624	3.812	.875	.312	1.688														4.312	3.750				2.000	3.250	3.187	9.375
	2.500	1 7/8"-12 x 3.000	2 1/2"-12 x 3.000	2 1/4"-12 x 3.000	2 1/4"-12 x 4.500	3.124	3.812	1.000	.312	2.062														4.312	3.750				2.250	3.500	3.437	9.625
	3.000	2 1/4"-12 x 3.500	3"-12 x 3.500	2 3/4"-12 x 3.500	2 3/4"-12 x 5.500	3.749	4.700	1.000	.375	2.625														5.562	4.500				2.250	3.500	3.437	9.625
	3.500	2 1/2"-12 x 3.500	3 1/2"-12 x 3.500	3 1/4"-12 x 3.500	3 1/4"-12 x 6.500	4.249	5.200	1.000	.375	3.000														6.062	5.000				2.250	3.500	3.437	9.625
	4.000	3"-12 x 4.000	4"-12 x 4.000	3 3/4"-12 x 4.000	3 3/4"-12 x 7.500	4.749	5.700	1.000	.375	3.375														6.562	5.500				2.250	3.500	3.437	9.625
	4.500	3 1/4"-12 x 4.500	4 1/2"-12 x 4.500	4 1/4"-12 x 4.500	4 1/4"-12 x 8.250	5.249	6.200	1.000	.375	3.875														7.062	6.000				2.250	3.500	3.437	9.625
	5.000	3 1/2"-12 x 5.000	5"-12 x 5.000	4 3/4"-12 x 5.000	4 3/4"-12 x 9.000	5.749	6.700	1.000	.375	4.250														7.562	6.500				2.250	3.500	3.437	9.625
	5.500	4"-12 x 5.500	5 1/2"-12 x 5.500	5 1/4"-12 x 5.500	5 1/4"-12 x 10.000	6.249	7.125	1.000	.375	4.625														7.938	7.000				2.250	3.500	3.437	9.625
12.000	2.000	1 1/2"-12 x 2.250	2"-12 x 2.250	1 3/4"-12 x 2.250	1 3/4"-12 x 3.500	2.624	3.812	.875	.312	1.688	12.750	1	.625	2.250	2.000	.875	1.062	6.875	1.500	1"-8	12.450	4.750	9.405	4.312	3.750	4.625	7.250	.750	2.000	3.250	3.187	9.875
	2.500	1 7/8"-12 x 3.000	2 1/2"-12 x 3.000	2 1/4"-12 x 3.000	2 1/4"-12 x 4.500	3.124	3.812	1.000	.312	2.062														4.312	3.750				2.250	3.500	3.437	10.125
	3.000	2 1/4"-12 x 3.500	3"-12 x 3.500	2 3/4"-12 x 3.500	2 3/4"-12 x 5.500	3.749	4.700	1.000	.375	2.625														5.562	4.500				2.250	3.500	3.437	10.125
	3.500	2 1/2"-12 x 3.500	3 1/2"-12 x 3.500	3 1/4"-12 x 3.500	3 1/4"-12 x 6.500	4.249	5.200	1.000	.375	3.000														6.062	5.000				2.250	3.500	3.437	10.125
	4.000	3"-12 x 4.000	4"-12 x 4.000	3 3/4"-12 x 4.000	3 3/4"-12 x 7.500	4.749	5.700	1.000	.375	3.375														6.562	5.500				2.250	3.500	3.437	10.125
	4.500	3 1/4"-12 x 4.500	4 1/2"-12 x 4.500	4 1/4"-12 x 4.500	4 1/4"-12 x 8.250	5.249	6.200	1.000	.375	3.875														7.062	6.000				2.250	3.500	3.437	10.125
	5.000	3 1/2"-12 x 5.000	5"-12 x 5.000	4 3/4"-12 x 5.000	4 3/4"-12 x 9.000	5.749	6.700	1.000	.375	4.250														7.562	6.500				2.250	3.500	3.437	10.125
	5.500	4"-12 x 5.500	5 1/2"-12 x 5.500	5 1/4"-12 x 5.500	5 1/4"-12 x 10.000	6.249	7.125	1.000	.375	4.625														7.938	7.000				2.250	3.500	3.437	10.125
14.000	2.500	1 7/8"-12 x 3.000	2 1/2"-12 x 3.000	2 1/4"-12 x 3.000	2 1/4"-12 x 4.500	3.124	3.812		.312	2.062	14.750	1 1/4	.625	2.750	2.250	1.000	1.250	8.125	1.875	1 1/4"-7	14.450	5.625	10.889	4.312	3.750	5.500	8.375	.875	2.250	3.812	3.688	11.500
	3.000	2 1/4"-12 x 3.500	3"-12 x 3.500	2 3/4"-12 x 3.500	2 3/4"-12 x 5.500	3.749	4.700		.375	2.625														5.562	4.500							
	3.500	2 1/2"-12 x 3.500	3 1/2"-12 x 3.500	3 1/4"-12 x 3.500	3 1/4"-12 x 6.500	4.249	5.200		.375	3.000														6.062	5.000							
	4.000	3"-12 x 4.000	4"-12 x 4.000	3 3/4"-12 x 4.000	3 3/4"-12 x 7.500	4.749	5.700	1.000	.375	3.375														6.562	5.500							
	4.500	3 1/4"-12 x 4.500	4 1/2"-12 x 4.500	4 1/4"-12 x 4.500	4 1/4"-12 x 8.250	5.249	6.200		.375	3.875														7.062	6.000							
	5.000	3 1/2"-12 x 5.000	5"-12 x 5.000	4 3/4"-12 x 5.000	4 3/4"-12 x 9.000	5.749	6.700		.375	4.250														7.562	6.500							
	5.500	4"-12 x 5.500	5 1/2"-12 x 5.500	5 1/4"-12 x 5.500	5 1/4"-12 x 10.000	6.249	7.125		.375	4.625														7.938	7.000							
BORE	MM	KM & KF	KD	KI	KA	B	BC	C	CS	D	E	EE	F	G	J	K	KN	LB	ND	NT	OD	P	R	RR	RS	SN	TN	TR	WB	XT	Y	ZB

NEVA DESIGN

FILE: 2.16_LM16L2.dwg REV: 02/09/2010

27650 Groesbeck Hwy • Roseville, MI 48066-2759 • Phone 586.775.7211 • Fax 586.775.4545 • Toll Free 800.526.7968 • e-mail: sales@peninsularcylinders.com • www.peninsularcylinders.com

HEAD SQUARE FLANGE

Peninsular Mounting Style: **LM 17**

Medium Duty Aluminum Air Cylinder

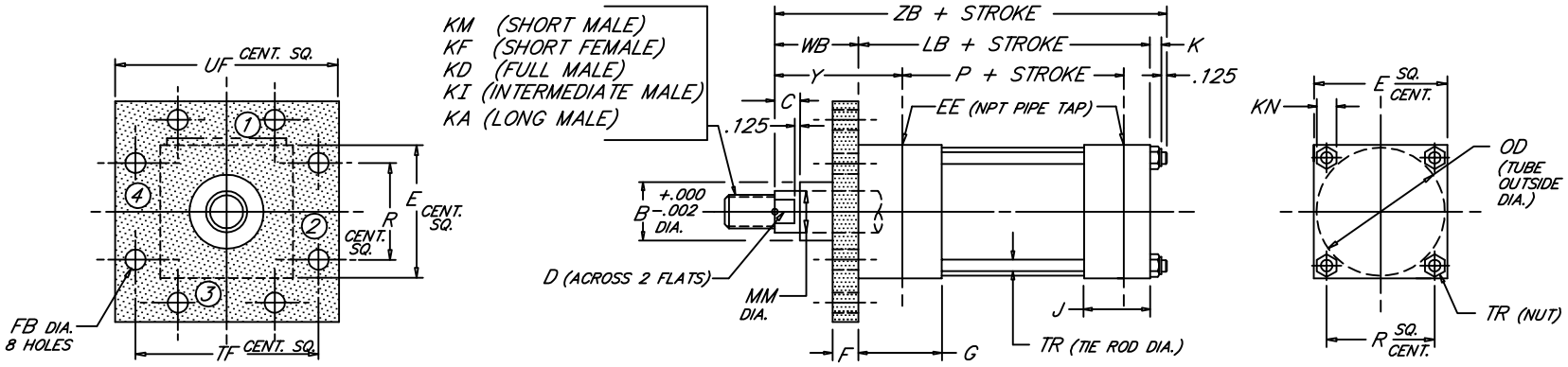

BORE	ROD MM	ROD THREAD X LENGTH KM & KF	KD	KI	KA	B	C	D	E	NPT EE	F	FB	G	J	K	KN	LB	OD	P	R	TF	TR	UF	WB	Y	ZB
1.500	.625	7/16"-20 x .750	5/8"-18 x .750	1/2"-20 x .750	1/2"-20 x 1.125	1.124	.375	.500	2.000	3/8	.375	.312	1.500	1.000	.312	.438	3.625	1.750	2.335	1.428	2.750	.250	3.375	1.000	1.875	5.062
	1.000	3/4"-16 x 1.125	1"-14 x 1.125	7/8"-14 x 1.125	7/8"-14 x 1.875	1.499	.500	.875																1.375	2.250	5.437
2.000	.625	7/16"-20 x .750	5/8"-18 x .750	1/2"-20 x .750	1/2"-20 x 1.125	1.124	.375	.500	2.500	3/8	.375	.375	1.500	1.000	.344	.500	3.625	2.250	2.335	1.838	3.375	.312	4.125	1.000	1.875	5.094
	1.000	3/4"-16 x 1.125	1"-14 x 1.125	7/8"-14 x 1.125	7/8"-14 x 1.875	1.499	.500	.875																1.375	2.250	5.469
	1.375	1"-14 x 1.625	1 3/8"-12 x 1.625	1 1/4"-12 x 1.625	1 1/4"-12 x 2.500	1.999	.625	1.125																1.625	2.500	5.719
2.500	.625	7/16"-20 x .750	5/8"-18 x .750	1/2"-20 x .750	1/2"-20 x 1.125	1.124	.375	.500	3.000	3/8	.375	.375	1.500	1.000	.344	.500	3.750	2.750	2.460	2.192	3.875	.312	4.625	1.000	1.875	5.219
	1.000	3/4"-16 x 1.125	1"-14 x 1.125	7/8"-14 x 1.125	7/8"-14 x 1.875	1.499	.500	.875																1.375	2.250	5.594
	1.375	1"-14 x 1.625	1 3/8"-12 x 1.625	1 1/4"-12 x 1.625	1 1/4"-12 x 2.500	1.999	.625	1.125																1.625	2.500	5.844
	1.750	1 1/4"-12 x 2.000	1 3/4"-12 x 2.000	1 1/2"-12 x 2.000	1 1/2"-12 x 3.000	2.374	.750	1.500																1.875	2.750	6.094
3.250	1.000	3/4"-16 x 1.125	1"-14 x 1.125	7/8"-14 x 1.125	7/8"-14 x 1.875	1.499	.500	.875	3.750	1/2	.625	.438	1.750	1.250	.438	.562	4.250	3.500	2.750	2.758	4.688	.375	5.500	1.375	2.375	6.188
	1.375	1"-14 x 1.625	1 3/8"-12 x 1.625	1 1/4"-12 x 1.625	1 1/4"-12 x 2.500	1.999	.625	1.125																1.625	2.625	6.438
	1.750	1 1/4"-12 x 2.000	1 3/4"-12 x 2.000	1 1/2"-12 x 2.000	1 1/2"-12 x 3.000	2.374	.750	1.500																1.875	2.875	6.688
	2.000	1 1/2"-12 x 2.250	2"-12 x 2.250	1 3/4"-12 x 2.250	1 3/4"-12 x 3.500	2.624	.875	1.688																2.000	3.000	6.813
4.000	1.000	3/4"-16 x 1.125	1"-14 x 1.125	7/8"-14 x 1.125	7/8"-14 x 1.875	1.499	.500	.875	4.500	1/2	.625	.438	1.750	1.250	.438	.562	4.250	4.250	2.750	3.323	5.438	.375	6.250	1.375	2.375	6.188
	1.375	1"-14 x 1.625	1 3/8"-12 x 1.625	1 1/4"-12 x 1.625	1 1/4"-12 x 2.500	1.999	.625	1.125																1.625	2.625	6.438
	1.750	1 1/4"-12 x 2.000	1 3/4"-12 x 2.000	1 1/2"-12 x 2.000	1 1/2"-12 x 3.000	2.374	.750	1.500																1.875	2.875	6.688
	2.000	1 1/2"-12 x 2.250	2"-12 x 2.250	1 3/4"-12 x 2.250	1 3/4"-12 x 3.500	2.624	.875	1.688																2.000	3.000	6.813
	2.500	1 7/8"-12 x 3.000	2 1/2"-12 x 3.000	2 1/4"-12 x 3.000	2 1/4"-12 x 4.500	3.124	1.000	2.062																2.250	3.250	7.063
5.000	1.000	3/4"-16 x 1.125	1"-14 x 1.125	7/8"-14 x 1.125	7/8"-14 x 1.875	1.499	.500	.875	5.500	1/2	.625	.562	1.750	1.250	.594	.750	4.500	5.250	3.000	4.101	6.625	.500	7.625	1.375	2.375	6.594
	1.375	1"-14 x 1.625	1 3/8"-12 x 1.625	1 1/4"-12 x 1.625	1 1/4"-12 x 2.500	1.999	.625	1.125																1.625	2.625	6.844
	1.750	1 1/4"-12 x 2.000	1 3/4"-12 x 2.000	1 1/2"-12 x 2.000	1 1/2"-12 x 3.000	2.374	.750	1.500																1.875	2.875	7.094
	2.000	1 1/2"-12 x 2.250	2"-12 x 2.250	1 3/4"-12 x 2.250	1 3/4"-12 x 3.500	2.624	.875	1.688																2.000	3.000	7.219
	2.500	1 7/8"-12 x 3.000	2 1/2"-12 x 3.000	2 1/4"-12 x 3.000	2 1/4"-12 x 4.500	3.124	1.000	2.062																2.250	3.250	7.469
	3.000	2 1/4"-12 x 3.500	3"-12 x 3.500	2 3/4"-12 x 3.500	2 3/4"-12 x 5.500	3.749	1.000	2.625																2.250	3.250	7.469
	3.500	2 1/2"-12 x 3.500	3 1/2"-12 x 3.500	3 1/4"-12 x 3.500	3 1/4"-12 x 6.500	4.249	1.000	3.000																2.250	3.250	7.469
6.000	1.375	1"-14 x 1.625	1 3/8"-12 x 1.625	1 1/4"-12 x 1.625	1 1/4"-12 x 2.500	1.999	.625	1.125	6.500	3/4	.750	.562	2.000	1.500	.594	.750	5.000	6.250	3.250	4.879	7.625	.500	8.625	1.625	2.750	7.344
	1.750	1 1/4"-12 x 2.000	1 3/4"-12 x 2.000	1 1/2"-12 x 2.000	1 1/2"-12 x 3.000	2.374	.750	1.500																1.875	3.000	7.594
	2.000	1 1/2"-12 x 2.250	2"-12 x 2.250	1 3/4"-12 x 2.250	1 3/4"-12 x 3.500	2.624	.875	1.688																2.000	3.125	7.719
	2.500	1 7/8"-12 x 3.000	2 1/2"-12 x 3.000	2 1/4"-12 x 3.000	2 1/4"-12 x 4.500	3.124	1.000	2.062																2.250	3.375	7.969
	3.000	2 1/4"-12 x 3.500	3"-12 x 3.500	2 3/4"-12 x 3.500	2 3/4"-12 x 5.500	3.749	1.000	2.625																2.250	3.375	7.969
	3.500	2 1/2"-12 x 3.500	3 1/2"-12 x 3.500	3 1/4"-12 x 3.500	3 1/4"-12 x 6.500	4.249	1.000	3.000																2.250	3.375	7.969
	4.000	3"-12 x 4.000	4"-12 x 4.000	3 3/4"-12 x 4.000	3 3/4"-12 x 7.500	4.749	1.000	3.375																2.250	3.375	7.969
BORE	MM	KM & KF	KD	KI	KA	B	C	D	E	EE	F	FB	G	J	K	KN	LB	OD	P	R	TF	TR	UF	WB	Y	ZB

NEVA DESIGN

FILE: 2.17_LM17S2.dwg REV: 02/09/2010

27650 Groesbeck Hwy • Roseville, MI 48066-2759 • Phone 586.775.7211 • Fax 586.775.4545 • Toll Free 800.526.7968 • e-mail: sales@peninsularcylinders.com • www.peninsularcylinders.com

CAP SQUARE FLANGE

Medium Duty Aluminum Air Cylinder

Peninsular Mounting Style: **LM 18**

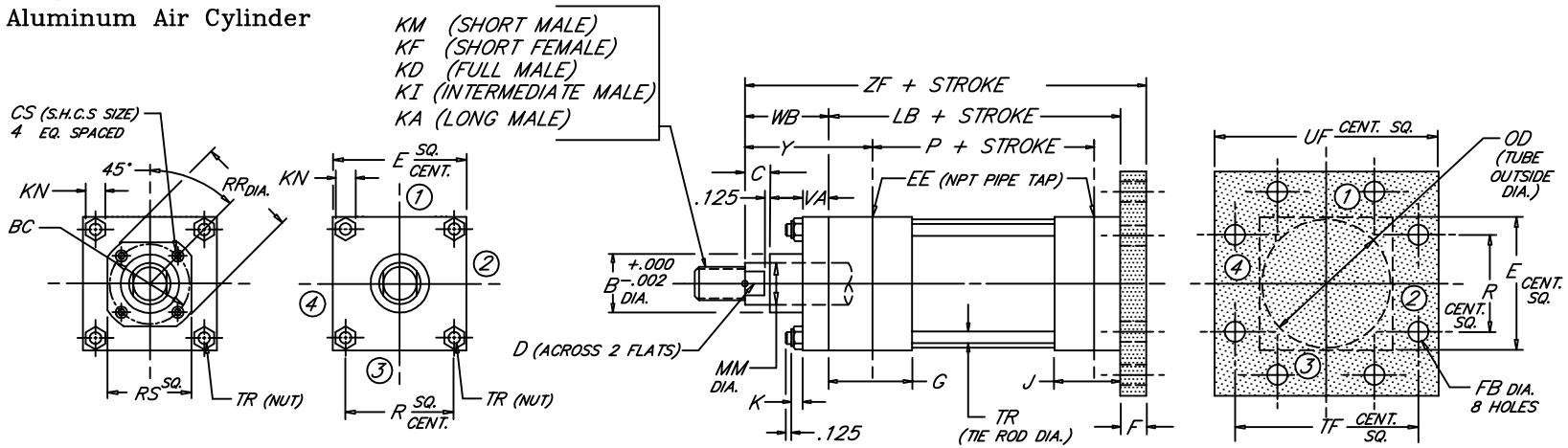

BORE	ROD MM	ROD THREAD X LENGTH KM & KF	KD	KI	KA	B	BC	C	CS	D	E	NPT EE	F	FB	G	J	K	KN	LB	OD	P	R	RR	RS	TF	TR	UF	VA	WB	Y	ZF
1.500	.625	7/16"-20 x .750	5/8"-18 x .750	1/2"-20 x .750	1/2"-20 x 1.125	1.124	---	.375	---	.500	2.000	3/8	.375	.312	1.500	1.000	.312	.438	3.625	1.750	2.335	1.428	---	---	2.750	.250	3.375	.375	1.000	1.875	5.000
	1.000	3/4"-16 x 1.125	1"-14 x 1.125	7/8"-14 x 1.125	7/8"-14 x 1.875	1.499		.500		.875																			1.375	2.250	5.375
2.000	.625	7/16"-20 x .750	5/8"-18 x .750	1/2"-20 x .750	1/2"-20 x 1.125	1.124	---	.375	---	.500	2.500	3/8	.375	.375	1.500	1.000	.344	.500	3.625	2.250	2.335	1.838	---	---	3.375	.312	4.125	.375	1.000	1.875	5.000
	1.000	3/4"-16 x 1.125	1"-14 x 1.125	7/8"-14 x 1.125	7/8"-14 x 1.875	1.499		.500		.875																			1.375	2.250	5.375
	1.375	1"-14 x 1.625	1 3/8"-12 x 1.625	1 1/4"-12 x 1.625	1 1/4"-12 x 2.500	1.999		.625		1.125																			1.625	2.500	5.625
2.500	.625	7/16"-20 x .750	5/8"-18 x .750	1/2"-20 x .750	1/2"-20 x 1.125	1.124	---	.375	---	.500	3.000	3/8	.375	.375	1.500	1.000	.344	.500	3.750	2.750	2.460	2.192	---	---	3.875	.312	4.625	.375	1.000	1.875	5.125
	1.000	3/4"-16 x 1.125	1"-14 x 1.125	7/8"-14 x 1.125	7/8"-14 x 1.875	1.499		.500		.875																			1.375	2.250	5.500
	1.375	1"-14 x 1.625	1 3/8"-12 x 1.625	1 1/4"-12 x 1.625	1 1/4"-12 x 2.500	1.999		.625		1.125																			1.625	2.500	5.750
	1.750	1 1/4"-12 x 2.000	1 3/4"-12 x 2.000	1 1/2"-12 x 2.000	1 1/2"-12 x 3.000	2.374		.750		1.500																			1.875	2.750	6.000
3.250	1.000	3/4"-16 x 1.125	1"-14 x 1.125	7/8"-14 x 1.125	7/8"-14 x 1.875	1.499	---	.500	---	.875	3.750	1/2	.625	.438	1.750	1.250	.438	.562	4.250	3.500	2.750	2.758	---	---	4.688	.375	5.500	.625	1.375	2.375	6.250
	1.375	1"-14 x 1.625	1 3/8"-12 x 1.625	1 1/4"-12 x 1.625	1 1/4"-12 x 2.500	1.999		.625		1.125																			1.625	2.625	6.500
	1.750	1 1/4"-12 x 2.000	1 3/4"-12 x 2.000	1 1/2"-12 x 2.000	1 1/2"-12 x 3.000	2.374		.750		1.500																			1.875	2.875	6.750
	2.000	1 1/2"-12 x 2.250	2"-12 x 2.250	1 3/4"-12 x 2.250	1 3/4"-12 x 3.500	2.624		.875		1.688																			2.000	3.000	6.875
4.000	1.000	3/4"-16 x 1.125	1"-14 x 1.125	7/8"-14 x 1.125	7/8"-14 x 1.875	1.499	2.562	.500	.250	.875	4.500	1/2	.625	.438	1.750	1.250	.438	.562	4.250	4.250	2.750	3.323	2.969	2.500	5.438	.375	6.250	.625	1.375	2.375	6.250
	1.375	1"-14 x 1.625	1 3/8"-12 x 1.625	1 1/4"-12 x 1.625	1 1/4"-12 x 2.500	1.999	2.562	.625	.250	1.125													2.969	2.500					1.625	2.625	6.500
	1.750	1 1/4"-12 x 2.000	1 3/4"-12 x 2.000	1 1/2"-12 x 2.000	1 1/2"-12 x 3.000	2.374	3.267	.750	.312	1.500													3.734	3.000					1.875	2.875	6.750
	2.000	1 1/2"-12 x 2.250	2"-12 x 2.250	1 3/4"-12 x 2.250	1 3/4"-12 x 3.500	2.624	---	.875	---	1.688													---	---					2.000	3.000	6.875
	2.500	1 7/8"-12 x 3.000	2 1/2"-12 x 3.000	2 1/4"-12 x 3.000	2 1/4"-12 x 4.500	3.124	---	1.000	---	2.062													---	---					2.250	3.250	7.125
5.000	1.000	3/4"-16 x 1.125	1"-14 x 1.125	7/8"-14 x 1.125	7/8"-14 x 1.875	1.499	2.562	.500	.250	.875	5.500	1/2	.625	.562	1.750	1.250	.594	.750	4.500	5.250	3.000	4.101	2.969	2.500	6.625	.500	7.625	.625	1.375	2.375	6.500
	1.375	1"-14 x 1.625	1 3/8"-12 x 1.625	1 1/4"-12 x 1.625	1 1/4"-12 x 2.500	1.999	2.562	.625	.250	1.125													2.969	2.500					1.625	2.625	6.750
	1.750	1 1/4"-12 x 2.000	1 3/4"-12 x 2.000	1 1/2"-12 x 2.000	1 1/2"-12 x 3.000	2.374	3.267	.750	.312	1.500													3.734	3.000					1.875	2.875	7.000
	2.000	1 1/2"-12 x 2.250	2"-12 x 2.250	1 3/4"-12 x 2.250	1 3/4"-12 x 3.500	2.624	3.812	.875	.312	1.688													4.312	3.750					2.000	3.000	7.125
	2.500	1 7/8"-12 x 3.000	2 1/2"-12 x 3.000	2 1/4"-12 x 3.000	2 1/4"-12 x 4.500	3.124	3.812	1.000	.312	2.062													4.312	3.750					2.250	3.250	7.375
	3.000	2 1/4"-12 x 3.500	3"-12 x 3.500	2 3/4"-12 x 3.500	2 3/4"-12 x 5.500	3.749	---	1.000	---	2.625													---	---					2.250	3.250	7.375
	3.500	2 1/2"-12 x 3.500	3 1/2"-12 x 3.500	3 1/4"-12 x 3.500	3 1/4"-12 x 6.500	4.249	---	1.000	---	3.000													---	---					2.250	3.250	7.375
6.000	1.375	1"-14 x 1.625	1 3/8"-12 x 1.625	1 1/4"-12 x 1.625	1 1/4"-12 x 2.500	1.999	3.267	.625	.312	1.125	6.500	3/4	.750	.562	2.000	1.500	.594	.750	5.000	6.250	3.250	4.879	3.734	3.000	7.625	.500	8.625	.625	1.625	2.750	7.375
	1.750	1 1/4"-12 x 2.000	1 3/4"-12 x 2.000	1 1/2"-12 x 2.000	1 1/2"-12 x 3.000	2.374	3.267	.750	.312	1.500													3.734	3.000				.625	1.875	3.000	7.625
	2.000	1 1/2"-12 x 2.250	2"-12 x 2.250	1 3/4"-12 x 2.250	1 3/4"-12 x 3.500	2.624	3.812	.875	.312	1.688													4.312	3.750				.625	2.000	3.125	7.750
	2.500	1 7/8"-12 x 3.000	2 1/2"-12 x 3.000	2 1/4"-12 x 3.000	2 1/4"-12 x 4.500	3.124	3.812	1.000	.312	2.062													4.312	3.750				.625	2.250	3.375	8.000
	3.000	2 1/4"-12 x 3.500	3"-12 x 3.500	2 3/4"-12 x 3.500	2 3/4"-12 x 5.500	3.749	4.700	1.000	.375	2.625													5.562	4.500				.625	2.250	3.375	8.000
	3.500	2 1/2"-12 x 3.500	3 1/2"-12 x 3.500	3 1/4"-12 x 3.500	3 1/4"-12 x 6.500	4.249	5.200	1.000	.375	3.000													6.062	5.000				.625	2.250	3.375	8.000
	4.000	3"-12 x 4.000	4"-12 x 4.000	3 3/4"-12 x 4.000	3 3/4"-12 x 7.500	4.749	---	1.000	---	3.375													---	---				.750	2.250	3.375	8.000
BORE	MM	KM & KF	KD	KI	KA	B	BC	C	CS	D	E	EE	F	FB	G	J	K	KN	LB	OD	P	R	RR	RS	TF	TR	UF	VA	WB	Y	ZF

NEVA DESIGN

FILE: 2.18_LM18S2.dwg REV: 02/09/2010

27650 Groesbeck Hwy • Roseville, MI 48066-2759 • Phone 586.775.7211 • Fax 586.775.4545 • Toll Free 800.526.7968 • e-mail: sales@peninsularcylinders.com • www.peninsularcylinders.com

HEAD SQUARE BLOCK

Medium Duty Aluminum Air Cylinder

Peninsular Mounting Style: **LM 19**

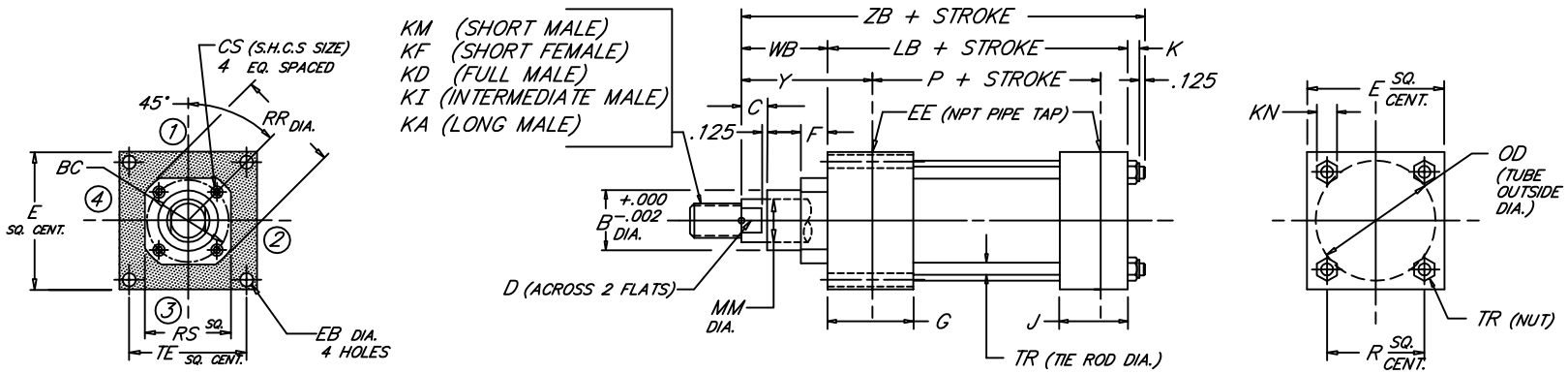

BORE	MM (ROD)	KM & KF (ROD THREAD X LENGTH)	KD	KI	KA	B	BC	C	CS	D	E	EB	EE (NPT)	F	G	J	K	KN	LB	OD	P	R	RR	RS	TE	TR	WB	Y	ZB
8.000	1.375	1"-14 x 1.625	1 3/8"-12 x 1.625	1 1/4"-12 x 1.625	1 1/4"-12 x 2.500	1.999	3.267	.625	.312	1.125	8.500	.688	3/4	.625	2.000	1.500	.750	.938	5.125	8.450	3.375	6.435	3.734	3.000	7.570	.625	1.625	2.750	7.625
	1.750	1 1/4"-12 x 2.000	1 3/4"-12 x 2.000	1 1/2"-12 x 2.000	1 1/2"-12 x 3.000	2.374	3.267	.750	.312	1.500													3.734	3.000			1.875	3.000	7.875
	2.000	1 1/2"-12 x 2.250	2"-12 x 2.250	1 3/4"-12 x 2.250	1 3/4"-12 x 3.500	2.624	3.812	.875	.312	1.688													4.312	3.750			2.000	3.125	8.000
	2.500	1 7/8"-12 x 3.000	2 1/2"-12 x 3.000	2 1/4"-12 x 3.000	2 1/4"-12 x 4.500	3.124	3.812	1.000	.312	2.062													4.312	3.750			2.250	3.375	8.250
	3.000	2 1/4"-12 x 3.500	3"-12 x 3.500	2 3/4"-12 x 3.500	2 3/4"-12 x 5.500	3.749	4.700	1.000	.375	2.625													5.562	4.500			2.250	3.375	8.250
	3.500	2 1/2"-12 x 3.500	3 1/2"-12 x 3.500	3 1/4"-12 x 3.500	3 1/4"-12 x 6.500	4.249	5.200	1.000	.375	3.000													6.062	5.000			2.250	3.375	8.250
	4.000	3"-12 x 4.000	4"-12 x 4.000	3 3/4"-12 x 4.000	3 3/4"-12 x 7.500	4.749	5.700	1.000	.375	3.375													6.562	5.500			2.250	3.375	8.250
	4.500	3 1/4"-12 x 4.500	4 1/2"-12 x 4.500	4 1/4"-12 x 4.500	4 1/4"-12 x 8.250	5.249	6.200	1.000	.375	3.875													7.062	6.000			2.250	3.375	8.250
	5.000	3 1/2"-12 x 5.000	5"-12 x 5.000	4 3/4"-12 x 5.000	4 3/4"-12 x 9.000	5.749	6.700	1.000	.375	4.250													7.562	6.500			2.250	3.375	8.250
	5.500	4"-12 x 5.500	5 1/2"-12 x 5.500	5 1/4"-12 x 5.500	5 1/4"-12 x 10.000	6.249	7.125	1.000	.375	4.625													7.938	7.000			2.250	3.375	8.250
10.000	1.750	1 1/4"-12 x 2.000	1 3/4"-12 x 2.000	1 1/2"-12 x 2.000	1 1/2"-12 x 3.000	2.374	3.812	.750	.312	1.500	10.625	.812	1	.625	2.250	2.000	.875	1.062	6.375	10.450	4.250	7.920	4.312	3.750	9.400	.750	1.875	3.062	9.250
	2.000	1 1/2"-12 x 2.250	2"-12 x 2.250	1 3/4"-12 x 2.250	1 3/4"-12 x 3.500	2.624	3.812	.875	.312	1.688													4.312	3.750			2.000	3.187	9.375
	2.500	1 7/8"-12 x 3.000	2 1/2"-12 x 3.000	2 1/4"-12 x 3.000	2 1/4"-12 x 4.500	3.124	3.812	1.000	.312	2.062													4.312	3.750			2.250	3.437	9.625
	3.000	2 1/4"-12 x 3.500	3"-12 x 3.500	2 3/4"-12 x 3.500	2 3/4"-12 x 5.500	3.749	4.700	1.000	.375	2.625													5.562	4.500			2.250	3.437	9.625
	3.500	2 1/2"-12 x 3.500	3 1/2"-12 x 3.500	3 1/4"-12 x 3.500	3 1/4"-12 x 6.500	4.249	5.200	1.000	.375	3.000													6.062	5.000			2.250	3.437	9.625
	4.000	3"-12 x 4.000	4"-12 x 4.000	3 3/4"-12 x 4.000	3 3/4"-12 x 7.500	4.749	5.700	1.000	.375	3.375													6.562	5.500			2.250	3.437	9.625
	4.500	3 1/4"-12 x 4.500	4 1/2"-12 x 4.500	4 1/4"-12 x 4.500	4 1/4"-12 x 8.250	5.249	6.200	1.000	.375	3.875													7.062	6.000			2.250	3.437	9.625
	5.000	3 1/2"-12 x 5.000	5"-12 x 5.000	4 3/4"-12 x 5.000	4 3/4"-12 x 9.000	5.749	6.700	1.000	.375	4.250													7.562	6.500			2.250	3.437	9.625
	5.500	4"-12 x 5.500	5 1/2"-12 x 5.500	5 1/4"-12 x 5.500	5 1/4"-12 x 10.000	6.249	7.125	1.000	.375	4.625													7.938	7.000			2.250	3.437	9.625
12.000	2.000	1 1/2"-12 x 2.250	2"-12 x 2.250	1 3/4"-12 x 2.250	1 3/4"-12 x 3.500	2.624	3.812	.875	.312	1.688	12.750	.812	1	.625	2.250	2.000	.875	1.062	6.875	12.450	4.750	9.405	4.312	3.750	11.100	.750	2.000	3.187	9.875
	2.500	1 7/8"-12 x 3.000	2 1/2"-12 x 3.000	2 1/4"-12 x 3.000	2 1/4"-12 x 4.500	3.124	3.812	1.000	.312	2.062													4.312	3.750			2.250	3.437	10.125
	3.000	2 1/4"-12 x 3.500	3"-12 x 3.500	2 3/4"-12 x 3.500	2 3/4"-12 x 5.500	3.749	4.700	1.000	.375	2.625													5.562	4.500			2.250	3.437	10.125
	3.500	2 1/2"-12 x 3.500	3 1/2"-12 x 3.500	3 1/4"-12 x 3.500	3 1/4"-12 x 6.500	4.249	5.200	1.000	.375	3.000													6.062	5.000			2.250	3.437	10.125
	4.000	3"-12 x 4.000	4"-12 x 4.000	3 3/4"-12 x 4.000	3 3/4"-12 x 7.500	4.749	5.700	1.000	.375	3.375													6.562	5.500			2.250	3.437	10.125
	4.500	3 1/4"-12 x 4.500	4 1/2"-12 x 4.500	4 1/4"-12 x 4.500	4 1/4"-12 x 8.250	5.249	6.200	1.000	.375	3.875													7.062	6.000			2.250	3.437	10.125
	5.000	3 1/2"-12 x 5.000	5"-12 x 5.000	4 3/4"-12 x 5.000	4 3/4"-12 x 9.000	5.749	6.700	1.000	.375	4.250													7.562	6.500			2.250	3.437	10.125
	5.500	4"-12 x 5.500	5 1/2"-12 x 5.500	5 1/4"-12 x 5.500	5 1/4"-12 x 10.000	6.249	7.125	1.000	.375	4.625													7.938	7.000			2.250	3.437	10.125
14.000	2.500	1 7/8"-12 x 3.000	2 1/2"-12 x 3.000	2 1/4"-12 x 3.000	2 1/4"-12 x 4.500	3.124	3.812		.312	2.062	14.750	.938	1 1/4	.625	2.750	2.250	1.000	1.250	8.125	14.450	5.625	10.889	4.312	3.750	12.875	.875	2.250	3.688	11.500
	3.000	2 1/4"-12 x 3.500	3"-12 x 3.500	2 3/4"-12 x 3.500	2 3/4"-12 x 5.500	3.749	4.700		.375	2.625													5.562	4.500					
	3.500	2 1/2"-12 x 3.500	3 1/2"-12 x 3.500	3 1/4"-12 x 3.500	3 1/4"-12 x 6.500	4.249	5.200		.375	3.000													6.062	5.000					
	4.000	3"-12 x 4.000	4"-12 x 4.000	3 3/4"-12 x 4.000	3 3/4"-12 x 7.500	4.749	5.700	1.000	.375	3.375													6.562	5.500					
	4.500	3 1/4"-12 x 4.500	4 1/2"-12 x 4.500	4 1/4"-12 x 4.500	4 1/4"-12 x 8.250	5.249	6.200		.375	3.875													7.062	6.000					
	5.000	3 1/2"-12 x 5.000	5"-12 x 5.000	4 3/4"-12 x 5.000	4 3/4"-12 x 9.000	5.749	6.700		.375	4.250													7.562	6.500					
	5.500	4"-12 x 5.500	5 1/2"-12 x 5.500	5 1/4"-12 x 5.500	5 1/4"-12 x 10.000	6.249	7.125		.375	4.625													7.938	7.000					
BORE	MM	KM & KF	KD	KI	KA	B	BC	C	CS	D	E	EB	EE	F	G	J	K	KN	LB	OD	P	R	RR	RS	TE	TR	WB	Y	ZB

NEVA DESIGN

FILE: 2.19_LM19L2.dwg REV: 02/09/2010

27650 Groesbeck Hwy • Roseville, MI 48066-2759 • Phone 586.775.7211 • Fax 586.775.4545 • Toll Free 800.526.7968 • e-mail: sales@peninsularcylinders.com • www.peninsularcylinders.com

CAP SQUARE BLOCK

Medium Duty Aluminum Air Cylinder

Peninsular Mounting Style: **LM 20**

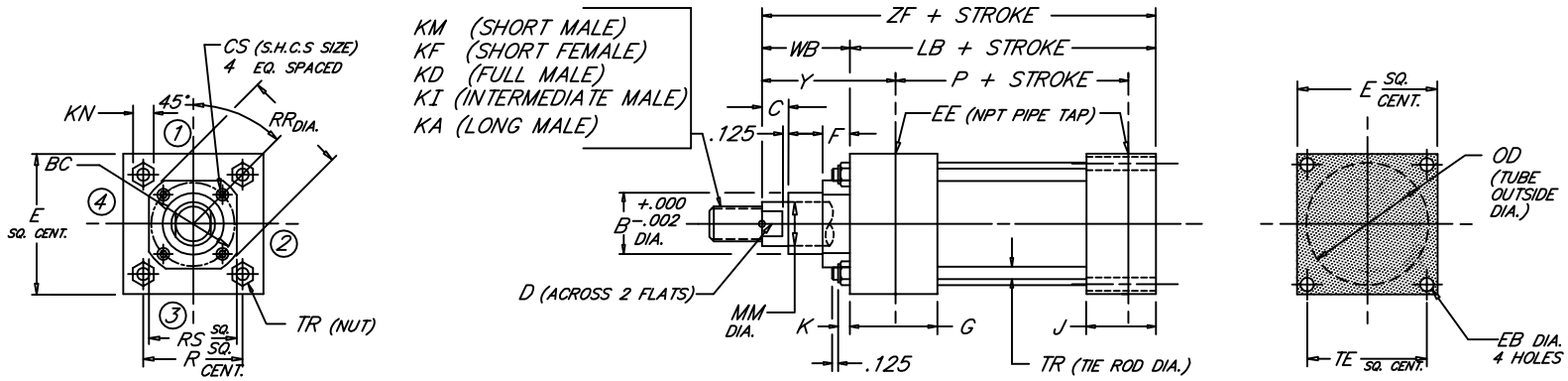

BORE	ROD MM	ROD THREAD X LENGTH KM & KF	KD	KI	KA	B	BC	C	CS	D	E	EB	NPT EE	F	G	J	K	KN	LB	OD	P	R	RR	RS	TE	TR	WB	Y	ZF
8.000	1.375	1"-14 x 1.625	1 3/8"-12 x 1.625	1 1/4"-12 x 1.625	1 1/4"-12 x 2.500	1.999	3.267	.625	.312	1.125	8.500	.688	3/4	.625	2.000	1.500	.750	.938	5.125	8.450	3.375	6.435	3.734	3.000	7.570	.625	1.625	2.750	6.750
	1.750	1 1/4"-12 x 2.000	1 3/4"-12 x 2.000	1 1/2"-12 x 2.000	1 1/2"-12 x 3.000	2.374	3.267	.750	.312	1.500													3.734	3.000			1.875	3.000	7.000
	2.000	1 1/2"-12 x 2.250	2"-12 x 2.250	1 3/4"-12 x 2.250	1 3/4"-12 x 3.500	2.624	3.812	.875	.312	1.688													4.312	3.750			2.000	3.125	7.125
	2.500	1 7/8"-12 x 3.000	2 1/2"-12 x 3.000	2 1/4"-12 x 3.000	2 1/4"-12 x 4.500	3.124	3.812	1.000	.312	2.062													4.312	3.750			2.250	3.375	7.375
	3.000	2 1/4"-12 x 3.500	3"-12 x 3.500	2 3/4"-12 x 3.500	2 3/4"-12 x 5.500	3.749	4.700	1.000	.375	2.625													5.562	4.500			2.250	3.375	7.375
	3.500	2 1/2"-12 x 3.500	3 1/2"-12 x 3.500	3 1/4"-12 x 3.500	3 1/4"-12 x 6.500	4.249	5.200	1.000	.375	3.000													6.062	5.000			2.250	3.375	7.375
	4.000	3"-12 x 4.000	4"-12 x 4.000	3 3/4"-12 x 4.000	3 3/4"-12 x 7.500	4.749	5.700	1.000	.375	3.375													6.562	5.500			2.250	3.375	7.375
	4.500	3 1/4"-12 x 4.500	4 1/2"-12 x 4.500	4 1/4"-12 x 4.500	4 1/4"-12 x 8.250	5.249	6.200	1.000	.375	3.875													7.062	6.000			2.250	3.375	7.375
	5.000	3 1/2"-12 x 5.000	5"-12 x 5.000	4 3/4"-12 x 5.000	4 3/4"-12 x 9.000	5.749	6.700	1.000	.375	4.250													7.562	6.500			2.250	3.375	7.375
	5.500	4"-12 x 5.500	5 1/2"-12 x 5.500	5 1/4"-12 x 5.500	5 1/4"-12 x 10.000	6.249	7.125	1.000	.375	4.625													7.938	7.000			2.250	3.375	7.375
10.000	1.750	1 1/4"-12 x 2.000	1 3/4"-12 x 2.000	1 1/2"-12 x 2.000	1 1/2"-12 x 3.000	2.374	3.812	.750	.312	1.500	10.625	.812	1	.625	2.250	2.000	.875	1.062	6.375	10.450	4.250	7.920	4.312	3.750	9.400	.750	1.875	3.062	8.250
	2.000	1 1/2"-12 x 2.250	2"-12 x 2.250	1 3/4"-12 x 2.250	1 3/4"-12 x 3.500	2.624	3.812	.875	.312	1.688													4.312	3.750			2.000	3.187	8.375
	2.500	1 7/8"-12 x 3.000	2 1/2"-12 x 3.000	2 1/4"-12 x 3.000	2 1/4"-12 x 4.500	3.124	3.812	1.000	.312	2.062													4.312	3.750			2.250	3.437	8.625
	3.000	2 1/4"-12 x 3.500	3"-12 x 3.500	2 3/4"-12 x 3.500	2 3/4"-12 x 5.500	3.749	4.700	1.000	.375	2.625													5.562	4.500			2.250	3.437	8.625
	3.500	2 1/2"-12 x 3.500	3 1/2"-12 x 3.500	3 1/4"-12 x 3.500	3 1/4"-12 x 6.500	4.249	5.200	1.000	.375	3.000													6.062	5.000			2.250	3.437	8.625
	4.000	3"-12 x 4.000	4"-12 x 4.000	3 3/4"-12 x 4.000	3 3/4"-12 x 7.500	4.749	5.700	1.000	.375	3.375													6.562	5.500			2.250	3.437	8.625
	4.500	3 1/4"-12 x 4.500	4 1/2"-12 x 4.500	4 1/4"-12 x 4.500	4 1/4"-12 x 8.250	5.249	6.200	1.000	.375	3.875													7.062	6.000			2.250	3.437	8.625
	5.000	3 1/2"-12 x 5.000	5"-12 x 5.000	4 3/4"-12 x 5.000	4 3/4"-12 x 9.000	5.749	6.700	1.000	.375	4.250													7.562	6.500			2.250	3.437	8.625
	5.500	4"-12 x 5.500	5 1/2"-12 x 5.500	5 1/4"-12 x 5.500	5 1/4"-12 x 10.000	6.249	7.125	1.000	.375	4.625													7.938	7.000			2.250	3.437	8.625
12.000	2.000	1 1/2"-12 x 2.250	2"-12 x 2.250	1 3/4"-12 x 2.250	1 3/4"-12 x 3.500	2.624	3.812	.875	.312	1.688	12.750	.812	1	.625	2.250	2.000	.875	1.062	6.875	12.450	4.750	9.405	4.312	3.750	11.100	.750	2.000	3.187	8.875
	2.500	1 7/8"-12 x 3.000	2 1/2"-12 x 3.000	2 1/4"-12 x 3.000	2 1/4"-12 x 4.500	3.124	3.812	1.000	.312	2.062													4.312	3.750			2.250	3.437	9.125
	3.000	2 1/4"-12 x 3.500	3"-12 x 3.500	2 3/4"-12 x 3.500	2 3/4"-12 x 5.500	3.749	4.700	1.000	.375	2.625													5.562	4.500			2.250	3.437	9.125
	3.500	2 1/2"-12 x 3.500	3 1/2"-12 x 3.500	3 1/4"-12 x 3.500	3 1/4"-12 x 6.500	4.249	5.200	1.000	.375	3.000													6.062	5.000			2.250	3.437	9.125
	4.000	3"-12 x 4.000	4"-12 x 4.000	3 3/4"-12 x 4.000	3 3/4"-12 x 7.500	4.749	5.700	1.000	.375	3.375													6.562	5.500			2.250	3.437	9.125
	4.500	3 1/4"-12 x 4.500	4 1/2"-12 x 4.500	4 1/4"-12 x 4.500	4 1/4"-12 x 8.250	5.249	6.200	1.000	.375	3.875													7.062	6.000			2.250	3.437	9.125
	5.000	3 1/2"-12 x 5.000	5"-12 x 5.000	4 3/4"-12 x 5.000	4 3/4"-12 x 9.000	5.749	6.700	1.000	.375	4.250													7.562	6.500			2.250	3.437	9.125
	5.500	4"-12 x 5.500	5 1/2"-12 x 5.500	5 1/4"-12 x 5.500	5 1/4"-12 x 10.000	6.249	7.125	1.000	.375	4.625													7.938	7.000			2.250	3.437	9.125
14.000	2.500	1 7/8"-12 x 3.000	2 1/2"-12 x 3.000	2 1/4"-12 x 3.000	2 1/4"-12 x 4.500	3.124	3.812		.312	2.062	14.750	.938	1 1/4	.625	2.750	2.250	1.000	1.250	8.125	14.450	5.625	10.889	4.312	3.750	12.875	.875	2.250	3.688	10.375
	3.000	2 1/4"-12 x 3.500	3"-12 x 3.500	2 3/4"-12 x 3.500	2 3/4"-12 x 5.500	3.749	4.700		.375	2.625													5.562	4.500					
	3.500	2 1/2"-12 x 3.500	3 1/2"-12 x 3.500	3 1/4"-12 x 3.500	3 1/4"-12 x 6.500	4.249	5.200		.375	3.000													6.062	5.000					
	4.000	3"-12 x 4.000	4"-12 x 4.000	3 3/4"-12 x 4.000	3 3/4"-12 x 7.500	4.749	5.700		.375	3.375													6.562	5.500					
	4.500	3 1/4"-12 x 4.500	4 1/2"-12 x 4.500	4 1/4"-12 x 4.500	4 1/4"-12 x 8.250	5.249	6.200		.375	3.875													7.062	6.000					
	5.000	3 1/2"-12 x 5.000	5"-12 x 5.000	4 3/4"-12 x 5.000	4 3/4"-12 x 9.000	5.749	6.700		.375	4.250													7.562	6.500					
	5.500	4"-12 x 5.500	5 1/2"-12 x 5.500	5 1/4"-12 x 5.500	5 1/4"-12 x 10.000	6.249	7.125		.375	4.625													7.938	7.000					
BORE	MM	KM & KF	KD	KI	KA	B	BC	C	CS	D	E	EB	EE	F	G	J	K	KN	LB	OD	P	R	RR	RS	TE	TR	WB	Y	ZF

NEWA DESIGN

2.20

FILE: 2.20_LM20L2.dwg REV: 02/09/2010

27650 Groesbeck Hwy • Roseville, MI 48066-2759 • Phone 586.775.7211 • Fax 586.775.4545 • Toll Free 800.526.7968 • e-mail: sales@peninsularcylinders.com • www.peninsularcylinders.com

CAP DETACHABLE EYE

Medium Duty Aluminum Air Cylinder

Peninsular Mounting Style: **LM 21**

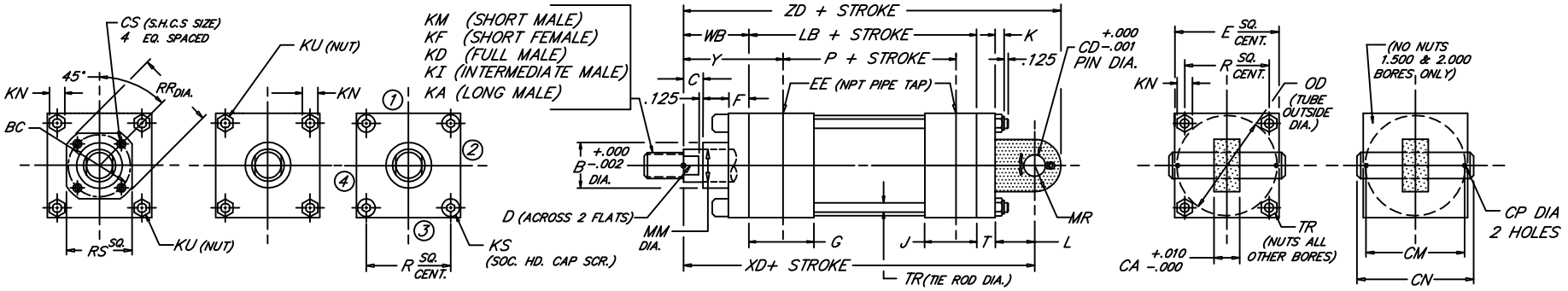

BORE	ROD MM	ROD THREAD X LENGTH KM & KF	KD	KI	KA	B	BC	C	CA	CD	CM	CN	CP	CS	D	E	NPT EE	F	G	J	K	KN	KS	KU	L	LB	MR	OD	P	R	RR	RS	T	TR	WB	XD	Y	ZD
1.500	.625	7/16"-20 x .750	5/8"-18 x .750	1/2"-20 x .750	1/2"-20 x 1.125	1.124	---	.375	.735	.500	1.938	2.281	.106	---	.500	2.000	3/8	.375	1.500	1.000	.312	.438	---	.250	.750	3.625	.625	1.750	2.335	1.428	---	---	.375	.250	1.000	5.750	1.875	6.375
	1.000	3/4"-16 x 1.125	1"-14 x 1.125	7/8"-14 x 1.125	7/8"-14 x 1.875	1.499		.500							.875																				1.375	6.125	2.250	6.750
2.000	.625	7/16"-20 x .750	5/8"-18 x .750	1/2"-20 x .750	1/2"-20 x 1.125	1.124	---	.375	.735	.500	1.938	2.281	.106	---	.500	2.500	3/8	.375	1.500	1.000	.344	.500	---	.312	.750	3.625	.625	2.250	2.335	1.838	---	---	.375	.312	1.000	5.750	1.875	6.375
	1.000	3/4"-16 x 1.125	1"-14 x 1.125	7/8"-14 x 1.125	7/8"-14 x 1.875	1.499		.500							.875																				1.375	6.125	2.250	6.750
	1.375	1"-14 x 1.625	1 3/8"-12 x 1.625	1 1/4"-12 x 1.625	1 1/4"-12 x 2.500	1.999		.625							1.125																				1.625	6.375	2.500	7.000
2.500	.625	7/16"-20 x .750	5/8"-18 x .750	1/2"-20 x .750	1/2"-20 x 1.125	1.124	---	.375	.735	.500	1.938	2.281	.106	---	.500	3.000	3/8	.375	1.500	1.000	.344	.500	.312	---	.750	3.750	.625	2.750	2.460	2.192	---	---	.375	.312	1.000	5.875	1.875	6.500
	1.000	3/4"-16 x 1.125	1"-14 x 1.125	7/8"-14 x 1.125	7/8"-14 x 1.875	1.499		.500							.875																				1.375	6.250	2.250	6.875
	1.375	1"-14 x 1.625	1 3/8"-12 x 1.625	1 1/4"-12 x 1.625	1 1/4"-12 x 2.500	1.999		.625							1.125																				1.625	6.500	2.500	7.125
	1.750	1 1/4"-12 x 2.000	1 3/4"-12 x 2.000	1 1/2"-12 x 2.000	1 1/2"-12 x 3.000	2.374		.750							1.500																				1.875	6.750	2.750	7.375
3.250	1.000	3/4"-16 x 1.125	1"-14 x 1.125	7/8"-14 x 1.125	7/8"-14 x 1.875	1.499	---	.500	1.235	.750	2.719	3.094	.140	---	.875	3.750	1/2	.625	1.750	1.250	.438	.562	.375	---	1.250	4.250	.875	3.500	2.750	2.758	---	---	.625	.375	1.375	7.500	2.375	8.375
	1.375	1"-14 x 1.625	1 3/8"-12 x 1.625	1 1/4"-12 x 1.625	1 1/4"-12 x 2.500	1.999		.625							1.125																				1.625	7.750	2.625	8.625
	1.750	1 1/4"-12 x 2.000	1 3/4"-12 x 2.000	1 1/2"-12 x 2.000	1 1/2"-12 x 3.000	2.374		.750							1.500																				1.875	8.000	2.875	8.875
	2.000	1 1/2"-12 x 2.250	2"-12 x 2.250	1 3/4"-12 x 2.250	1 3/4"-12 x 3.500	2.624		.875							1.688																				2.000	8.125	3.000	9.000
4.000	1.000	3/4"-16 x 1.125	1"-14 x 1.125	7/8"-14 x 1.125	7/8"-14 x 1.875	1.499	2.562	.500	1.235	.750	2.719	3.094	.140	.250	.875	4.500	1/2	.625	1.750	1.250	.438	.562	---	.375	1.250	4.250	.875	4.250	2.750	3.323	2.969	2.500	.625	.375	1.375	7.500	2.375	8.375
	1.375	1"-14 x 1.625	1 3/8"-12 x 1.625	1 1/4"-12 x 1.625	1 1/4"-12 x 2.500	1.999	2.562	.625						.250	1.125								---	.375							2.969	2.500			1.625	7.750	2.625	8.625
	1.750	1 1/4"-12 x 2.000	1 3/4"-12 x 2.000	1 1/2"-12 x 2.000	1 1/2"-12 x 3.000	2.374	3.267	.750						.312	1.500								---	.375							3.734	3.000			1.875	8.000	2.875	8.875
	2.000	1 1/2"-12 x 2.250	2"-12 x 2.250	1 3/4"-12 x 2.250	1 3/4"-12 x 3.500	2.624	---	.875						---	1.688								.375	---							---	---			2.000	8.125	3.000	9.000
	2.500	1 7/8"-12 x 3.000	2 1/2"-12 x 3.000	2 1/4"-12 x 3.000	2 1/4"-12 x 4.500	3.124	---	1.000						---	2.062								.375	---							---	---			2.250	8.375	3.250	9.250
5.000	1.000	3/4"-16 x 1.125	1"-14 x 1.125	7/8"-14 x 1.125	7/8"-14 x 1.875	1.499	2.562	.500	1.235	.750	2.719	3.094	.140	.250	.875	5.500	1/2	.625	1.750	1.250	.594	.750	---	.500	1.250	4.500	.875	5.250	3.000	4.101	2.969	2.500	.625	.500	1.375	7.750	2.375	8.625
	1.375	1"-14 x 1.625	1 3/8"-12 x 1.625	1 1/4"-12 x 1.625	1 1/4"-12 x 2.500	1.999	2.562	.625						.250	1.125								---	.500							2.969	2.500			1.625	8.000	2.625	8.875
	1.750	1 1/4"-12 x 2.000	1 3/4"-12 x 2.000	1 1/2"-12 x 2.000	1 1/2"-12 x 3.000	2.374	3.267	.750						.312	1.500								---	.500							3.734	3.000			1.875	8.250	2.875	9.125
	2.000	1 1/2"-12 x 2.250	2"-12 x 2.250	1 3/4"-12 x 2.250	1 3/4"-12 x 3.500	2.624	3.812	.875						.312	1.688								---	.500							4.312	3.750			2.000	8.375	3.000	9.250
	2.500	1 7/8"-12 x 3.000	2 1/2"-12 x 3.000	2 1/4"-12 x 3.000	2 1/4"-12 x 4.500	3.124	3.812	1.000						.312	2.062								---	.500							4.312	3.750			2.250	8.625	3.250	9.500
	3.000	2 1/4"-12 x 3.500	3"-12 x 3.500	2 3/4"-12 x 3.500	2 3/4"-12 x 5.500	3.749	---	1.000						---	2.625								.500	---							---	---			2.250	8.625	3.250	9.500
	3.500	2 1/2"-12 x 3.500	3 1/2"-12 x 3.500	3 1/4"-12 x 3.500	3 1/4"-12 x 6.500	4.249	---	1.000						---	3.000								.500	---							---	---			2.250	8.625	3.250	9.500
6.000	1.375	1"-14 x 1.625	1 3/8"-12 x 1.625	1 1/4"-12 x 1.625	1 1/4"-12 x 2.500	1.999	3.267	.625	1.485	1.000	3.219	3.594	.140	.312	1.125	6.500	3/4	.625	2.000	1.500	.594	.750	---	.500	1.500	5.000	1.125	6.250	3.250	4.879	3.734	3.000	.750	.500	1.625	8.875	2.750	10.000
	1.750	1 1/4"-12 x 2.000	1 3/4"-12 x 2.000	1 1/2"-12 x 2.000	1 1/2"-12 x 3.000	2.374	3.267	.750						.312	1.500			.625					---	.500							3.734	3.000			1.875	9.125	3.000	10.250
	2.000	1 1/2"-12 x 2.250	2"-12 x 2.250	1 3/4"-12 x 2.250	1 3/4"-12 x 3.500	2.624	3.812	.875						.312	1.688			.625					---	.500							4.312	3.750			2.000	9.250	3.125	10.375
	2.500	1 7/8"-12 x 3.000	2 1/2"-12 x 3.000	2 1/4"-12 x 3.000	2 1/4"-12 x 4.500	3.124	3.812	1.000						.312	2.062			.625					---	.500							4.312	3.750			2.250	9.500	3.375	10.625
	3.000	2 1/4"-12 x 3.500	3"-12 x 3.500	2 3/4"-12 x 3.500	2 3/4"-12 x 5.500	3.749	4.700	1.000						.375	2.625			.625					---	.500							5.562	4.500			2.250	9.500	3.375	10.625
	3.500	2 1/2"-12 x 3.500	3 1/2"-12 x 3.500	3 1/4"-12 x 3.500	3 1/4"-12 x 6.500	4.249	5.200	1.000						.375	3.000			.625					---	.500							6.062	5.000			2.250	9.500	3.375	10.625
	4.000	3"-12 x 4.000	4"-12 x 4.000	3 3/4"-12 x 4.000	3 3/4"-12 x 7.500	4.749	---	1.000						---	3.375			.750					.500	---							---	---			2.250	9.500	3.375	10.625
BORE	MM	KM & KF	KD	KI	KA	B	BC	C	CA	CD	CM	CN	CP	CS	D	E	EE	F	G	J	K	KN	KS	KU	L	LB	MR	OD	P	R	RR	RS	T	TR	WB	XD	Y	ZD

NEVA DESIGN

2.21

FILE: 2.21_LM21S2.dwg REV: 02/09/2010

27650 Groesbeck Hwy • Roseville, MI 48066-2759 • Phone 586.775.7211 • Fax 586.775.4545 • Toll Free 800.526.7968 • e-mail: sales@peninsularcylinders.com • www.peninsularcylinders.com

CAP FIXED SPHERICAL EYE

Peninsular Mounting Style: **LM 22**

Medium Duty Aluminum Air Cylinder

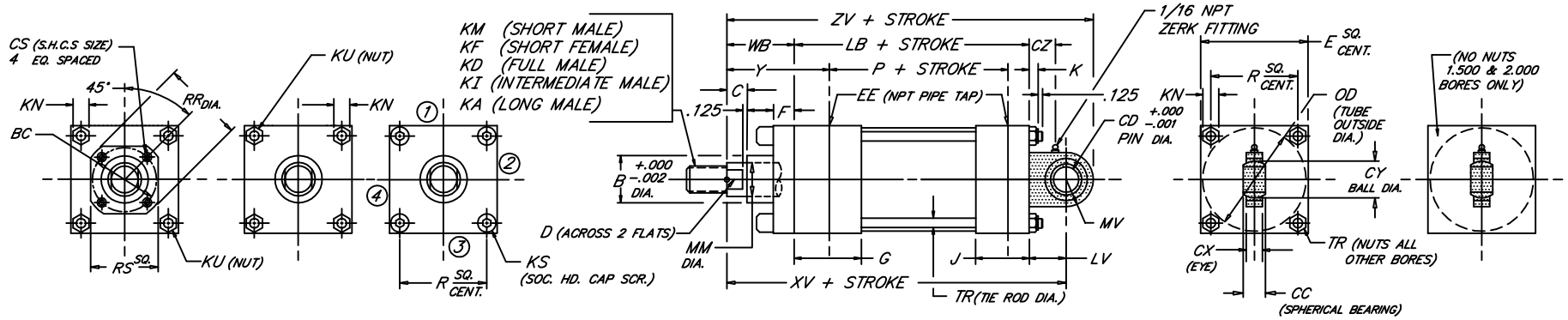

BORE	ROD MM	KM & KF	KD	KI	KA	B	BC	C	CC	CD	CS	CX	CY	CZ	D	E	NPT EE	F	G	J	K	KN	KS	KU	LV	LB	MV	OD	P	R	RR	RS	TR	WB	XV	Y	ZV
1.500	.625	7/16"-20 x .750	5/8"-18 x .750	1/2"-20 x .750	1/2"-20 x 1.125	1.124	---	.375	.437	.500	---	.375	.710	.438	.500	2.000	3/8	.375	1.500	1.000	.312	.438	---	.250	.812	3.625	.750	1.750	2.335	1.428	---	---	.250	1.000	5.437	1.875	6.187
	1.000	3/4"-16 x 1.125	1"-14 x 1.125	7/8"-14 x 1.125	7/8"-14 x 1.875	1.499		.500							.875																			1.375	5.812	2.250	6.582
2.000	.625	7/16"-20 x .750	5/8"-18 x .750	1/2"-20 x .750	1/2"-20 x 1.125	1.124	---	.375	.437	.500	---	.375	.710	.438	.500	2.500	3/8	.375	1.500	1.000	.344	.500	---	.312	.812	3.625	.750	2.250	2.335	1.838	---	---	.312	1.000	5.437	1.875	6.187
	1.000	3/4"-16 x 1.125	1"-14 x 1.125	7/8"-14 x 1.125	7/8"-14 x 1.875	1.499		.500							.875																			1.375	5.812	2.250	6.562
	1.375	1"-14 x 1.625	1 3/8"-12 x 1.625	1 1/4"-12 x 1.625	1 1/4"-12 x 2.500	1.999		.625							1.125																			1.625	6.062	2.500	6.812
2.500	.625	7/16"-20 x .750	5/8"-18 x .750	1/2"-20 x .750	1/2"-20 x 1.125	1.124	---	.375	.437	.500	---	.375	.710	.438	.500	3.000	3/8	.375	1.500	1.000	.344	.500	.312	---	.812	3.750	.750	2.750	2.460	2.192	---	---	.312	1.000	5.562	1.875	6.312
	1.000	3/4"-16 x 1.125	1"-14 x 1.125	7/8"-14 x 1.125	7/8"-14 x 1.875	1.499		.500							.875																			1.375	5.937	2.250	6.687
	1.375	1"-14 x 1.625	1 3/8"-12 x 1.625	1 1/4"-12 x 1.625	1 1/4"-12 x 2.500	1.999		.625							1.125																			1.625	6.187	2.500	6.937
	1.750	1 1/4"-12 x 2.000	1 3/4"-12 x 2.000	1 1/2"-12 x 2.000	1 1/2"-12 x 3.000	2.374		.750							1.500																			1.875	6.437	2.750	7.187
3.250	1.000	3/4"-16 x 1.125	1"-14 x 1.125	7/8"-14 x 1.125	7/8"-14 x 1.875	1.499	---	.500	.656	.750	---	.562	1.086	.625	.875	3.750	1/2	.625	1.750	1.250	.438	.562	.375	---	1.187	4.250	1.250	3.500	2.750	2.758	---	---	.375	1.375	6.812	2.375	8.062
	1.375	1"-14 x 1.625	1 3/8"-12 x 1.625	1 1/4"-12 x 1.625	1 1/4"-12 x 2.500	1.999		.625							1.125																			1.625	7.062	2.625	8.312
	1.750	1 1/4"-12 x 2.000	1 3/4"-12 x 2.000	1 1/2"-12 x 2.000	1 1/2"-12 x 3.000	2.374		.750							1.500																			1.875	7.312	2.875	8.562
	2.000	1 1/2"-12 x 2.250	2"-12 x 2.250	1 3/4"-12 x 2.250	1 3/4"-12 x 3.500	2.624		.875							1.688																			2.000	7.437	3.000	8.687
4.000	1.000	3/4"-16 x 1.125	1"-14 x 1.125	7/8"-14 x 1.125	7/8"-14 x 1.875	1.499	2.562	.500	.656	.750	.250	.562	1.086	.625	.875	4.500	1/2	.625	1.750	1.250	.438	.562	---	.375	1.187	4.250	1.250	4.250	2.750	3.323	2.969	2.500	.375	1.375	6.812	2.375	8.062
	1.375	1"-14 x 1.625	1 3/8"-12 x 1.625	1 1/4"-12 x 1.625	1 1/4"-12 x 2.500	1.999	2.562	.625			.250				1.125								---	.375							2.969	2.500		1.625	7.062	2.625	8.312
	1.750	1 1/4"-12 x 2.000	1 3/4"-12 x 2.000	1 1/2"-12 x 2.000	1 1/2"-12 x 3.000	2.374	3.267	.750			.312				1.500								---	.375							3.734	3.000		1.875	7.312	2.875	8.562
	2.000	1 1/2"-12 x 2.250	2"-12 x 2.250	1 3/4"-12 x 2.250	1 3/4"-12 x 3.500	2.624	---	.875			---				1.688								.375	---							---	---		2.000	7.437	3.000	8.687
	2.500	1 7/8"-12 x 3.000	2 1/2"-12 x 3.000	2 1/4"-12 x 3.000	2 1/4"-12 x 4.500	3.124	---	1.000			---				2.062								.375	---							---	---		2.250	7.687	3.250	8.937
5.000	1.000	3/4"-16 x 1.125	1"-14 x 1.125	7/8"-14 x 1.125	7/8"-14 x 1.875	1.499	2.562	.500	.656	.750	.250	.562	1.086	.625	.875	5.500	1/2	.625	1.750	1.250	.594	.750	---	.500	1.187	4.500	1.250	5.250	3.000	4.101	2.969	2.500	.500	1.375	7.062	2.375	8.312
	1.375	1"-14 x 1.625	1 3/8"-12 x 1.625	1 1/4"-12 x 1.625	1 1/4"-12 x 2.500	1.999	2.562	.625			.250				1.125								---	.500							2.969	2.500		1.625	7.312	2.625	8.562
	1.750	1 1/4"-12 x 2.000	1 3/4"-12 x 2.000	1 1/2"-12 x 2.000	1 1/2"-12 x 3.000	2.374	3.267	.750			.312				1.500								---	.500							3.734	3.000		1.875	7.562	2.875	8.812
	2.000	1 1/2"-12 x 2.250	2"-12 x 2.250	1 3/4"-12 x 2.250	1 3/4"-12 x 3.500	2.624	3.812	.875			.312				1.688								---	.500							4.312	3.750		2.000	7.687	3.000	8.937
	2.500	1 7/8"-12 x 3.000	2 1/2"-12 x 3.000	2 1/4"-12 x 3.000	2 1/4"-12 x 4.500	3.124	3.812	1.000			.312				2.062								---	.500							4.312	3.750		2.250	7.937	3.250	9.187
	3.000	2 1/4"-12 x 3.500	3"-12 x 3.500	2 3/4"-12 x 3.500	2 3/4"-12 x 5.500	3.749	---	1.000			---				2.625								.500	---							---	---		2.250	7.937	3.250	9.187
	3.500	2 1/2"-12 x 3.500	3 1/2"-12 x 3.500	3 1/4"-12 x 3.500	3 1/4"-12 x 6.500	4.249	---	1.000			---				3.000								.500	---							---	---		2.250	7.937	3.250	9.187
6.000	1.375	1"-14 x 1.625	1 3/8"-12 x 1.625	1 1/4"-12 x 1.625	1 1/4"-12 x 2.500	1.999	3.267	.625	.875	1.000	.312	.750	1.436	.812	1.125	6.500	3/4	.625	2.000	1.500	.594	.750	---	.500	1.562	5.000	1.500	6.250	3.250	4.879	3.734	3.000	.500	1.625	8.187	2.750	9.687
	1.750	1 1/4"-12 x 2.000	1 3/4"-12 x 2.000	1 1/2"-12 x 2.000	1 1/2"-12 x 3.000	2.374	3.267	.750			.312				1.500			.625					---	.500							3.734	3.000		1.875	8.437	3.000	9.937
	2.000	1 1/2"-12 x 2.250	2"-12 x 2.250	1 3/4"-12 x 2.250	1 3/4"-12 x 3.500	2.624	3.812	.875			.312				1.688			.625					---	.500							4.312	3.750		2.000	8.562	3.125	10.062
	2.500	1 7/8"-12 x 3.000	2 1/2"-12 x 3.000	2 1/4"-12 x 3.000	2 1/4"-12 x 4.500	3.124	3.812	1.000			.312				2.062			.625					---	.500							4.312	3.750		2.250	8.812	3.375	10.312
	3.000	2 1/4"-12 x 3.500	3"-12 x 3.500	2 3/4"-12 x 3.500	2 3/4"-12 x 5.500	3.749	4.700	1.000			.375				2.625			.625					---	.500							5.562	4.500		2.250	8.812	3.375	10.312
	3.500	2 1/2"-12 x 3.500	3 1/2"-12 x 3.500	3 1/4"-12 x 3.500	3 1/4"-12 x 6.500	4.249	5.200	1.000			.375				3.000			.625					---	.500							6.062	5.000		2.250	8.812	3.375	10.312
	4.000	3"-12 x 4.000	4"-12 x 4.000	3 3/4"-12 x 4.000	3 3/4"-12 x 7.500	4.749	---	1.000			---				3.375			.750					.500	---							---	---		2.250	8.812	3.375	10.312
BORE	MM	KM & KF	KD	KI	KA	B	BC	C	CC	CD	CS	CX	CY	CZ	D	E	EE	F	G	J	K	KN	KS	KU	LV	LB	MV	OD	P	R	RR	RS	TR	WB	XV	Y	ZV

NEVA DESIGN

2.22

FILE: 2.22_LM22S2.dwg REV: 02/09/2010

27650 Groesbeck Hwy • Roseville, MI 48066-2759 • Phone 586.775.7211 • Fax 586.775.4545 • Toll Free 800.526.7968 • e-mail: sales@peninsularcylinders.com • www.peninsularcylinders.com

CAP FIXED SPHERICAL EYE

Peninsular Mounting Style: **LM 22**

Medium Duty Aluminum Air Cylinder

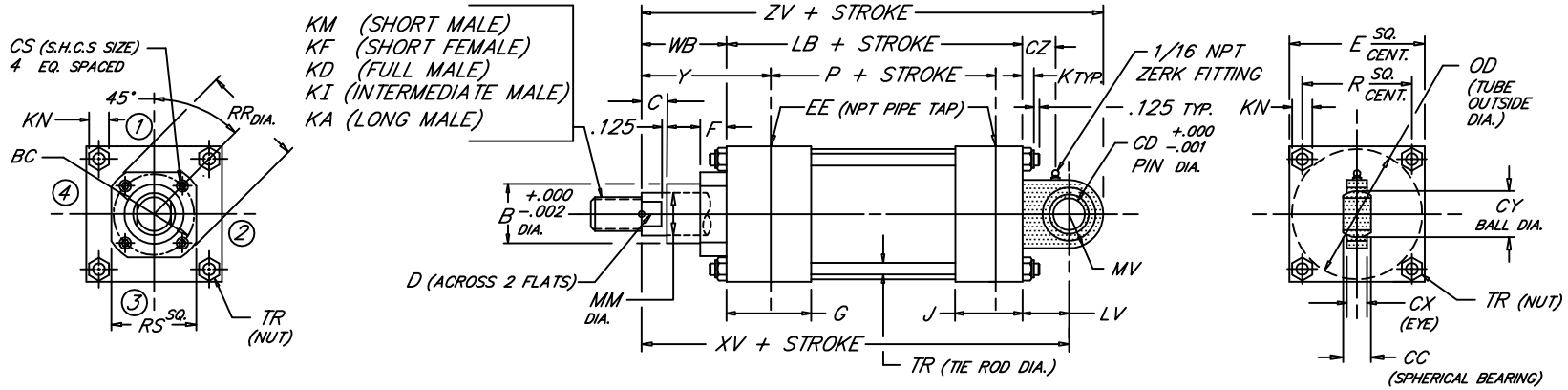

BORE	ROD MM	ROD THREAD X LENGTH KM & KF	KD	KI	KA	B	BC	C	CC	CD	CS	CX	CY	CZ	D	E	NPT EE	F	G	J	K	KN	LV	LB	MV	OD	P	R	RR	RS	TR	WB	XV	Y	ZV
8.000	1.375	1"-14 x 1.625	1 3/8"-12 x 1.625	1 1/4"-12 x 1.625	1 1/4"-12 x 2.500	1.999	3.267	.625	.875	1.000	.312	.750	1.436	.812	1.125	8.500	3/4	.625	2.000	1.500	.750	.938	1.562	5.125	1.500	8.450	3.375	6.435	3.734	3.000	.625	1.625	8.312	2.750	9.812
	1.750	1 1/4"-12 x 2.000	1 3/4"-12 x 2.000	1 1/2"-12 x 2.000	1 1/2"-12 x 3.000	2.374	3.267	.750			.312				1.500														3.734	3.000		1.875	8.562	3.000	10.062
	2.000	1 1/2"-12 x 2.250	2"-12 x 2.250	1 3/4"-12 x 2.250	1 3/4"-12 x 3.500	2.624	3.812	.875			.312				1.688														4.312	3.750		2.000	8.687	3.125	10.187
	2.500	1 7/8"-12 x 3.000	2 1/2"-12 x 3.000	2 1/4"-12 x 3.000	2 1/4"-12 x 4.500	3.124	3.812	1.000			.312				2.062														4.312	3.750		2.250	8.937	3.375	10.437
	3.000	2 1/4"-12 x 3.500	3"-12 x 3.500	2 3/4"-12 x 3.500	2 3/4"-12 x 5.500	3.749	4.700	1.000			.375				2.625														5.562	4.500		2.250	8.937	3.375	10.437
	3.500	2 1/2"-12 x 3.500	3 1/2"-12 x 3.500	3 1/4"-12 x 3.500	3 1/4"-12 x 6.500	4.249	5.200	1.000			.375				3.000														6.062	5.000		2.250	8.937	3.375	10.437
	4.000	3"-12 x 4.000	4"-12 x 4.000	3 3/4"-12 x 4.000	3 3/4"-12 x 7.500	4.749	5.700	1.000			.375				3.375														6.562	5.500		2.250	8.937	3.375	10.437
	4.500	3 1/4"-12 x 4.500	4 1/2"-12 x 4.500	4 1/4"-12 x 4.500	4 1/4"-12 x 8.250	5.249	6.200	1.000			.375				3.875														7.062	6.000		2.250	8.937	3.375	10.437
	5.000	3 1/2"-12 x 5.000	5"-12 x 5.000	4 3/4"-12 x 5.000	4 3/4"-12 x 9.000	5.749	6.700	1.000			.375				4.250														7.562	6.500		2.250	8.937	3.375	10.437
	5.500	4"-12 x 5.500	5 1/2"-12 x 5.500	5 1/4"-12 x 5.500	5 1/4"-12 x 10.000	6.249	7.125	1.000			.375				4.625														7.938	7.000		2.250	8.937	3.375	10.437
10.000	1.750	1 1/4"-12 x 2.000	1 3/4"-12 x 2.000	1 1/2"-12 x 2.000	1 1/2"-12 x 3.000	2.374	3.812	.750	1.187	1.375	.312	1.031	1.926	.906	1.500	10.625	1	.625	2.250	2.000	.875	1.062	1.937	6.375	1.750	10.450	4.250	7.920	4.312	3.750	.750	1.875	10.187	3.062	11.937
	2.000	1 1/2"-12 x 2.250	2"-12 x 2.250	1 3/4"-12 x 2.250	1 3/4"-12 x 3.500	2.624	3.812	.875			.312				1.688														4.312	3.750		2.000	10.312	3.187	12.062
	2.500	1 7/8"-12 x 3.000	2 1/2"-12 x 3.000	2 1/4"-12 x 3.000	2 1/4"-12 x 4.500	3.124	3.812	1.000			.312				2.062														4.312	3.750		2.250	10.562	3.437	12.312
	3.000	2 1/4"-12 x 3.500	3"-12 x 3.500	2 3/4"-12 x 3.500	2 3/4"-12 x 5.500	3.749	4.700	1.000			.375				2.625														5.562	4.500		2.250	10.562	3.437	12.312
	3.500	2 1/2"-12 x 3.500	3 1/2"-12 x 3.500	3 1/4"-12 x 3.500	3 1/4"-12 x 6.500	4.249	5.200	1.000			.375				3.000														6.062	5.000		2.250	10.562	3.437	12.312
	4.000	3"-12 x 4.000	4"-12 x 4.000	3 3/4"-12 x 4.000	3 3/4"-12 x 7.500	4.749	5.700	1.000			.375				3.375														6.562	5.500		2.250	10.562	3.437	12.312
	4.500	3 1/4"-12 x 4.500	4 1/2"-12 x 4.500	4 1/4"-12 x 4.500	4 1/4"-12 x 8.250	5.249	6.200	1.000			.375				3.875														7.062	6.000		2.250	10.562	3.437	12.312
	5.000	3 1/2"-12 x 5.000	5"-12 x 5.000	4 3/4"-12 x 5.000	4 3/4"-12 x 9.000	5.749	6.700	1.000			.375				4.250														7.562	6.500		2.250	10.562	3.437	12.312
	5.500	4"-12 x 5.500	5 1/2"-12 x 5.500	5 1/4"-12 x 5.500	5 1/4"-12 x 10.000	6.249	7.125	1.000			.375				4.625														7.938	7.000		2.250	10.562	3.437	12.312
12.000	2.000	1 1/2"-12 x 2.250	2"-12 x 2.250	1 3/4"-12 x 2.250	1 3/4"-12 x 3.500	2.624	3.812	.875	1.531	1.750	.312	1.312	2.515	1.094	1.688	12.750	1	.625	2.250	2.000	.875	1.062	2.437	6.875	2.250	12.450	4.750	9.405	4.312	3.750	.750	2.000	11.312	3.187	13.562
	2.500	1 7/8"-12 x 3.000	2 1/2"-12 x 3.000	2 1/4"-12 x 3.000	2 1/4"-12 x 4.500	3.124	3.812	1.000			.312				2.062														4.312	3.750		2.250	11.562	3.437	13.812
	3.000	2 1/4"-12 x 3.500	3"-12 x 3.500	2 3/4"-12 x 3.500	2 3/4"-12 x 5.500	3.749	4.700	1.000			.375				2.625														5.562	4.500		2.250	11.562	3.437	13.812
	3.500	2 1/2"-12 x 3.500	3 1/2"-12 x 3.500	3 1/4"-12 x 3.500	3 1/4"-12 x 6.500	4.249	5.200	1.000			.375				3.000														6.062	5.000		2.250	11.562	3.437	13.812
	4.000	3"-12 x 4.000	4"-12 x 4.000	3 3/4"-12 x 4.000	3 3/4"-12 x 7.500	4.749	5.700	1.000			.375				3.375														6.562	5.500		2.250	11.562	3.437	13.812
	4.500	3 1/4"-12 x 4.500	4 1/2"-12 x 4.500	4 1/4"-12 x 4.500	4 1/4"-12 x 8.250	5.249	6.200	1.000			.375				3.875														7.062	6.000		2.250	11.562	3.437	13.812
	5.000	3 1/2"-12 x 5.000	5"-12 x 5.000	4 3/4"-12 x 5.000	4 3/4"-12 x 9.000	5.749	6.700	1.000			.375				4.250														7.562	6.500		2.250	11.562	3.437	13.812
	5.500	4"-12 x 5.500	5 1/2"-12 x 5.500	5 1/4"-12 x 5.500	5 1/4"-12 x 10.000	6.249	7.125	1.000			.375				4.625														7.938	7.000		2.250	11.562	3.437	13.812
14.000	2.500	1 7/8"-12 x 3.000	2 1/2"-12 x 3.000	2 1/4"-12 x 3.000	2 1/4"-12 x 4.500	3.124	3.812				.312				2.062														4.312	3.750					
	3.000	2 1/4"-12 x 3.500	3"-12 x 3.500	2 3/4"-12 x 3.500	2 3/4"-12 x 5.500	3.749	4.700				.375				2.625														5.562	4.500					
	3.500	2 1/2"-12 x 3.500	3 1/2"-12 x 3.500	3 1/4"-12 x 3.500	3 1/4"-12 x 6.500	4.249	5.200				.375				3.000														6.062	5.000					
	4.000	3"-12 x 4.000	4"-12 x 4.000	3 3/4"-12 x 4.000	3 3/4"-12 x 7.500	4.749	5.700	1.000	1.750	2.000	.375	1.500	2.872	1.156	3.375	14.750	1 1/4	.625	2.750	2.250	1.000	1.250	2.687	8.125	2.750	14.450	5.625	10.889	6.562	5.500	.875	2.250	13.062	3.688	15.812
	4.500	3 1/4"-12 x 4.500	4 1/2"-12 x 4.500	4 1/4"-12 x 4.500	4 1/4"-12 x 8.250	5.249	6.200				.375				3.875														7.062	6.000					
	5.000	3 1/2"-12 x 5.000	5"-12 x 5.000	4 3/4"-12 x 5.000	4 3/4"-12 x 9.000	5.749	6.700				.375				4.250														7.562	6.500					
	5.500	4"-12 x 5.500	5 1/2"-12 x 5.500	5 1/4"-12 x 5.500	5 1/4"-12 x 10.000	6.249	7.125				.375				4.625														7.938	7.000					
BORE	MM	KM & KF	KD	KI	KA	B	BC	C	CC	CD	CS	CX	CY	CZ	D	E	EE	F	G	J	K	KN	LV	LB	MV	OD	P	R	RR	RS	TR	WB	XV	Y	ZV

NEVA DESIGN

FILE: 2.22_LM22L2.dwg REV: 02/09/2010

27650 Groesbeck Hwy • Roseville, MI 48066-2759 • Phone 586.775.7211 • Fax 586.775.4545 • Toll Free 800.526.7968 • e-mail: sales@peninsularcylinders.com • www.peninsularcylinders.com

CAP DETACHABLE CLEVIS

Peninsular Mounting Style: **LM 24**

Medium Duty Aluminum Air Cylinder

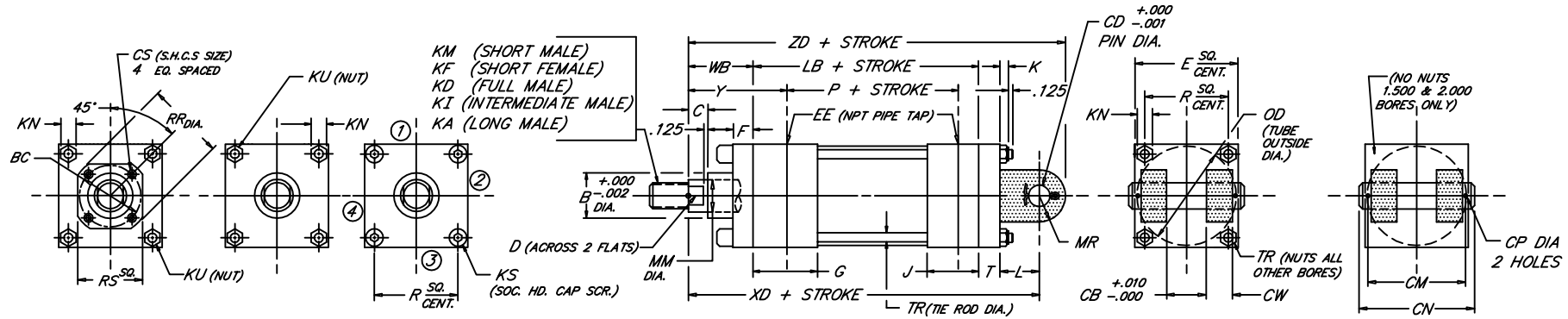

BORE	MM	KM & KF	KD	KI	KA	B	BC	C	CB	CD	CM	CN	CP	CS	CW	D	E	EE	F	G	J	K	KN	KS	KU	L	LB	MR	OD	P	R	RR	RS	T	TR	WB	XD	Y	ZD
	ROD	ROD THREAD X LENGTH																NPT																				
1.500	.625	7/16"-20 x .750	5/8"-18 x .750	1/2"-20 x .750	1/2"-20 x 1.125	1.124	---	.375	.765	.500	1.938	2.281	.106	---	.500	.500	2.000	3/8	.375	1.500	1.000	.312	.438	---	.250	.750	3.625	.625	1.750	2.335	1.428	---	---	.375	.250	1.000	5.750	1.875	6.375
	1.000	3/4"-16 x 1.125	1"-14 x 1.125	7/8"-14 x 1.125	7/8"-14 x 1.875	1.499		.500								.875																				1.375	6.125	2.250	6.750
2.000	.625	7/16"-20 x .750	5/8"-18 x .750	1/2"-20 x .750	1/2"-20 x 1.125	1.124	---	.375	.765	.500	1.938	2.281	.106	---	.500	.500	2.500	3/8	.375	1.500	1.000	.344	.500	---	.312	.750	3.625	.625	2.250	2.335	1.838	---	---	.375	.312	1.000	5.750	1.875	6.375
	1.000	3/4"-16 x 1.125	1"-14 x 1.125	7/8"-14 x 1.125	7/8"-14 x 1.875	1.499		.500								.875																				1.375	6.125	2.250	6.750
	1.375	1"-14 x 1.625	1 3/8"-12 x 1.625	1 1/4"-12 x 1.625	1 1/4"-12 x 2.500	1.999		.625								1.125																				1.625	6.375	2.500	7.000
2.500	.625	7/16"-20 x .750	5/8"-18 x .750	1/2"-20 x .750	1/2"-20 x 1.125	1.124	---	.375	.765	.500	1.938	2.281	.106	---	.500	.500	3.000	3/8	.375	1.500	1.000	.344	.500	.312	---	.750	3.750	.625	2.750	2.460	2.192	---	---	.375	.312	1.000	5.875	1.875	6.500
	1.000	3/4"-16 x 1.125	1"-14 x 1.125	7/8"-14 x 1.125	7/8"-14 x 1.875	1.499		.500								.875																				1.375	6.250	2.250	6.875
	1.375	1"-14 x 1.625	1 3/8"-12 x 1.625	1 1/4"-12 x 1.625	1 1/4"-12 x 2.500	1.999		.625								1.125																				1.625	6.500	2.500	7.125
	1.750	1 1/4"-12 x 2.000	1 3/4"-12 x 2.000	1 1/2"-12 x 2.000	1 1/2"-12 x 3.000	2.374		.750								1.500																				1.875	6.750	2.750	7.375
3.250	1.000	3/4"-16 x 1.125	1"-14 x 1.125	7/8"-14 x 1.125	7/8"-14 x 1.875	1.499	---	.500	1.265	.750	2.719	3.094	.140	---	.625	.875	3.750	1/2	.625	1.750	1.250	.438	.562	.375	---	1.250	4.250	.875	3.500	2.750	2.758	---	---	.625	.375	1.375	7.500	2.375	8.375
	1.375	1"-14 x 1.625	1 3/8"-12 x 1.625	1 1/4"-12 x 1.625	1 1/4"-12 x 2.500	1.999		.625								1.125																				1.625	7.750	2.625	8.625
	1.750	1 1/4"-12 x 2.000	1 3/4"-12 x 2.000	1 1/2"-12 x 2.000	1 1/2"-12 x 3.000	2.374		.750								1.500																				1.875	8.000	2.875	8.875
	2.000	1 1/2"-12 x 2.250	2"-12 x 2.250	1 3/4"-12 x 2.250	1 3/4"-12 x 3.500	2.624		.875								1.688																				2.000	8.125	3.000	9.000
4.000	1.000	3/4"-16 x 1.125	1"-14 x 1.125	7/8"-14 x 1.125	7/8"-14 x 1.875	1.499	2.562	.500	1.265	.750	2.719	3.094	.140	.250	.625	.875	4.500	1/2	.625	1.750	1.250	.438	.562	---	.375	1.250	4.250	.875	4.250	2.750	3.323	2.969	2.500	.625	.375	1.375	7.500	2.375	8.375
	1.375	1"-14 x 1.625	1 3/8"-12 x 1.625	1 1/4"-12 x 1.625	1 1/4"-12 x 2.500	1.999	2.562	.625						.250		1.125								---	.375							2.969	2.500			1.625	7.750	2.625	8.625
	1.750	1 1/4"-12 x 2.000	1 3/4"-12 x 2.000	1 1/2"-12 x 2.000	1 1/2"-12 x 3.000	2.374	3.267	.750						.312		1.500								---	.375							3.734	3.000			1.875	8.000	2.875	8.875
	2.000	1 1/2"-12 x 2.250	2"-12 x 2.250	1 3/4"-12 x 2.250	1 3/4"-12 x 3.500	2.624	---	.875						---		1.688								.375	---							---	---			2.000	8.125	3.000	9.000
	2.500	1 7/8"-12 x 3.000	2 1/2"-12 x 3.000	2 1/4"-12 x 3.000	2 1/4"-12 x 4.500	3.124	---	1.000						---		2.062								.375	---							---	---			2.250	8.375	3.250	9.250
5.000	1.000	3/4"-16 x 1.125	1"-14 x 1.125	7/8"-14 x 1.125	7/8"-14 x 1.875	1.499	2.562	.500	1.265	.750	2.719	3.094	.140	.250	.625	.875	5.500	1/2	.625	1.750	1.250	.594	.750	---	.500	1.250	4.500	.875	5.250	3.000	4.101	2.969	2.500	.625	.500	1.375	7.750	2.375	8.625
	1.375	1"-14 x 1.625	1 3/8"-12 x 1.625	1 1/4"-12 x 1.625	1 1/4"-12 x 2.500	1.999	2.562	.625						.250		1.125								---	.500							2.969	2.500			1.625	8.000	2.625	8.875
	1.750	1 1/4"-12 x 2.000	1 3/4"-12 x 2.000	1 1/2"-12 x 2.000	1 1/2"-12 x 3.000	2.374	3.267	.750						.312		1.500								---	.500							3.734	3.000			1.875	8.250	2.875	9.125
	2.000	1 1/2"-12 x 2.250	2"-12 x 2.250	1 3/4"-12 x 2.250	1 3/4"-12 x 3.500	2.624	3.812	.875						.312		1.688								---	.500							4.312	3.750			2.000	8.375	3.000	9.250
	2.500	1 7/8"-12 x 3.000	2 1/2"-12 x 3.000	2 1/4"-12 x 3.000	2 1/4"-12 x 4.500	3.124	3.812	1.000						.312		2.062								---	.500							4.312	3.750			2.250	8.625	3.250	9.500
	3.000	2 1/4"-12 x 3.500	3"-12 x 3.500	2 3/4"-12 x 3.500	2 3/4"-12 x 5.500	3.749	---	1.000						---		2.625								.500	---							---	---			2.250	8.625	3.250	9.500
	3.500	2 1/2"-12 x 3.500	3 1/2"-12 x 3.500	3 1/4"-12 x 3.500	3 1/4"-12 x 6.500	4.249	---	1.000						---		3.000								.500	---							---	---			2.250	8.625	3.250	9.500
6.000	1.375	1"-14 x 1.625	1 3/8"-12 x 1.625	1 1/4"-12 x 1.625	1 1/4"-12 x 2.500	1.999	3.267	.625	1.515	1.000	3.219	3.594	.140	.312	.750	1.125	6.500	3/4	.625	2.000	1.500	.594	.750	---	.500	1.500	5.000	1.125	6.250	3.250	4.879	3.734	3.000	.750	.500	1.625	8.875	2.750	10.000
	1.750	1 1/4"-12 x 2.000	1 3/4"-12 x 2.000	1 1/2"-12 x 2.000	1 1/2"-12 x 3.000	2.374	3.267	.750						.312		1.500			.625					---	.500							3.734	3.000			1.875	9.125	3.000	10.250
	2.000	1 1/2"-12 x 2.250	2"-12 x 2.250	1 3/4"-12 x 2.250	1 3/4"-12 x 3.500	2.624	3.812	.875						.312		1.688			.625					---	.500							4.312	3.750			2.000	9.250	3.125	10.375
	2.500	1 7/8"-12 x 3.000	2 1/2"-12 x 3.000	2 1/4"-12 x 3.000	2 1/4"-12 x 4.500	3.124	3.812	1.000						.312		2.062			.625					---	.500							4.312	3.750			2.250	9.500	3.375	10.625
	3.000	2 1/4"-12 x 3.500	3"-12 x 3.500	2 3/4"-12 x 3.500	2 3/4"-12 x 5.500	3.749	4.700	1.000						.375		2.625			.625					---	.500							5.562	4.500			2.250	9.500	3.375	10.625
	3.500	2 1/2"-12 x 3.500	3 1/2"-12 x 3.500	3 1/4"-12 x 3.500	3 1/4"-12 x 6.500	4.249	5.200	1.000						.375		3.000			.625					---	.500							6.062	5.000			2.250	9.500	3.375	10.625
	4.000	3"-12 x 4.000	4"-12 x 4.000	3 3/4"-12 x 4.000	3 3/4"-12 x 7.500	4.749	---	1.000						---		3.375			.750					.500	---							---	---			2.250	9.500	3.375	10.625
BORE	MM	KM & KF	KD	KI	KA	B	BC	C	CB	CD	CM	CN	CP	CS	CW	D	E	EE	F	G	J	K	KN	KS	KU	L	LB	MR	OD	P	R	RR	RS	T	TR	WB	XD	Y	ZD

NEVA DESIGN

FILE: 2.24_LM24S2.dwg REV: 02/09/2010

27650 Groesbeck Hwy • Roseville, MI 48066-2759 • Phone 586.775.7211 • Fax 586.775.4545 • Toll Free 800.526.7968 • e-mail: sales@peninsularcylinders.com • www.peninsularcylinders.com

CAP FIXED EYE

Medium Duty Aluminum Air Cylinder

Peninsular Mounting Style: **LM 25**

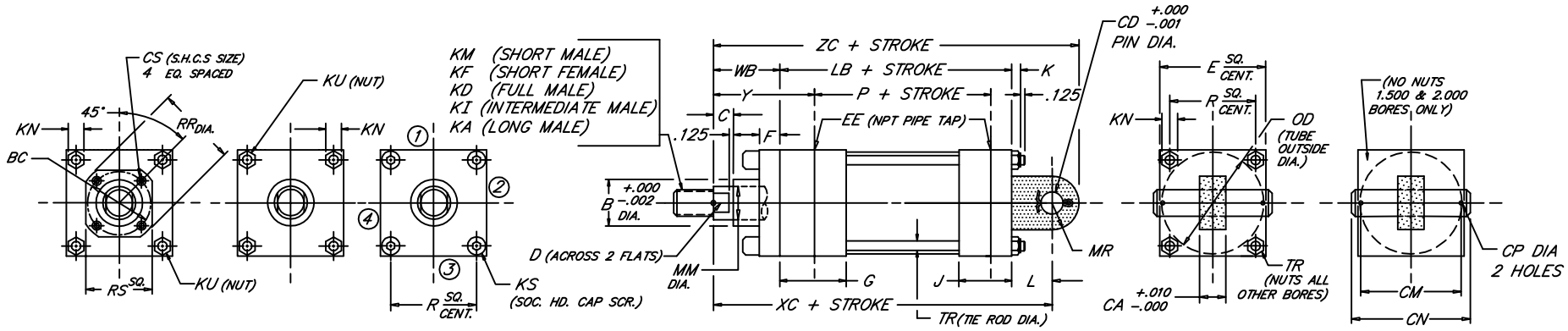

BORE	MM	ROD KM & KF	ROD KD	ROD KI	ROD KA	B	BC	C	CA	CD	CM	CN	CP	CS	D	E	NPT EE	F	G	J	K	KN	KS	KU	L	LB	MR	OD	P	R	RR	RS	TR	WB	XC	Y	ZC
1.500	.625	7/16"-20 x .750	5/8"-18 x .750	1/2"-20 x .750	1/2"-20 x 1.125	1.124	---	.375	.735	.500	1.938	2.281	.106	---	.500	2.000	3/8	.375	1.500	1.000	.312	.438	---	.250	.750	3.625	.500	1.750	2.335	1.428	---	---	---	1.000	5.375	1.875	5.875
	1.000	3/4"-16 x 1.125	1"-14 x 1.125	7/8"-14 x 1.125	7/8"-14 x 1.875	1.499		.500							.875																			1.375	5.750	2.250	6.250
2.000	.625	7/16"-20 x .750	5/8"-18 x .750	1/2"-20 x .750	1/2"-20 x 1.125	1.124	---	.375	.735	.500	1.938	2.281	.106	---	.500	2.500	3/8	.375	1.500	1.000	.344	.500	---	.312	.750	3.625	.500	2.250	2.335	1.838	---	---	---	1.000	5.375	1.875	5.875
	1.000	3/4"-16 x 1.125	1"-14 x 1.125	7/8"-14 x 1.125	7/8"-14 x 1.875	1.499		.500							.875																			1.375	5.750	2.250	6.250
	1.375	1"-14 x 1.625	1 3/8"-12 x 1.625	1 1/4"-12 x 1.625	1 1/4"-12 x 2.500	1.999		.625							1.125																			1.625	6.000	2.500	6.500
2.500	.625	7/16"-20 x .750	5/8"-18 x .750	1/2"-20 x .750	1/2"-20 x 1.125	1.124	---	.375	.735	.500	1.938	2.281	.106	---	.500	3.000	3/8	.375	1.500	1.000	.344	.500	.312	---	.750	3.750	.500	2.750	2.460	2.192	---	---	.312	1.000	5.500	1.875	6.000
	1.000	3/4"-16 x 1.125	1"-14 x 1.125	7/8"-14 x 1.125	7/8"-14 x 1.875	1.499		.500							.875																			1.375	5.875	2.250	6.375
	1.375	1"-14 x 1.625	1 3/8"-12 x 1.625	1 1/4"-12 x 1.625	1 1/4"-12 x 2.500	1.999		.625							1.125																			1.625	6.125	2.500	6.625
	1.750	1 1/4"-12 x 2.000	1 3/4"-12 x 2.000	1 1/2"-12 x 2.000	1 1/2"-12 x 3.000	2.374		.750							1.500																			1.875	6.375	2.750	6.875
3.250	1.000	3/4"-16 x 1.125	1"-14 x 1.125	7/8"-14 x 1.125	7/8"-14 x 1.875	1.499	---	.500	1.235	.750	2.719	3.094	.140	---	.875	3.750	1/2	.625	1.750	1.250	.438	.562	.375	---	1.250	4.250	.750	3.500	2.750	2.758	---	---	.375	1.375	6.875	2.375	7.625
	1.375	1"-14 x 1.625	1 3/8"-12 x 1.625	1 1/4"-12 x 1.625	1 1/4"-12 x 2.500	1.999		.625							1.125																			1.625	7.125	2.625	7.875
	1.750	1 1/4"-12 x 2.000	1 3/4"-12 x 2.000	1 1/2"-12 x 2.000	1 1/2"-12 x 3.000	2.374		.750							1.500																			1.875	7.375	2.875	8.125
	2.000	1 1/2"-12 x 2.250	2"-12 x 2.250	1 3/4"-12 x 2.250	1 3/4"-12 x 3.500	2.624		.875							1.688																			2.000	7.500	3.000	8.250
4.000	1.000	3/4"-16 x 1.125	1"-14 x 1.125	7/8"-14 x 1.125	7/8"-14 x 1.875	1.499	2.562	.500	1.235	.750	2.719	3.094	.140	.250	.875	4.500	1/2	.625	1.750	1.250	.438	.562	---	.375	1.250	4.250	.750	4.250	2.750	3.323	2.969	2.500	.375	1.375	6.875	2.375	7.625
	1.375	1"-14 x 1.625	1 3/8"-12 x 1.625	1 1/4"-12 x 1.625	1 1/4"-12 x 2.500	1.999	2.562	.625						.250	1.125								---	.375							2.969	2.500		1.625	7.125	2.625	7.875
	1.750	1 1/4"-12 x 2.000	1 3/4"-12 x 2.000	1 1/2"-12 x 2.000	1 1/2"-12 x 3.000	2.374	3.267	.750						.312	1.500								---	.375							3.734	3.000		1.875	7.375	2.875	8.125
	2.000	1 1/2"-12 x 2.250	2"-12 x 2.250	1 3/4"-12 x 2.250	1 3/4"-12 x 3.500	2.624	---	.875						---	1.688								.375	---							---	---		2.000	7.500	3.000	8.250
	2.500	1 7/8"-12 x 3.000	2 1/2"-12 x 3.000	2 1/4"-12 x 3.000	2 1/4"-12 x 4.500	3.124	---	1.000						---	2.062								.375	---							---	---		2.250	7.750	3.250	8.500
5.000	1.000	3/4"-16 x 1.125	1"-14 x 1.125	7/8"-14 x 1.125	7/8"-14 x 1.875	1.499	2.562	.500	1.235	.750	2.719	3.094	.140	.250	.875	5.500	1/2	.625	1.750	1.250	.594	.750	---	.500	1.250	4.500	.750	5.250	3.000	4.101	2.969	2.500	.500	1.375	7.125	2.375	7.875
	1.375	1"-14 x 1.625	1 3/8"-12 x 1.625	1 1/4"-12 x 1.625	1 1/4"-12 x 2.500	1.999	2.562	.625						.250	1.125								---	.500							2.969	2.500		1.625	7.375	2.625	8.125
	1.750	1 1/4"-12 x 2.000	1 3/4"-12 x 2.000	1 1/2"-12 x 2.000	1 1/2"-12 x 3.000	2.374	3.267	.750						.312	1.500								---	.500							3.734	3.000		1.875	7.625	2.875	8.375
	2.000	1 1/2"-12 x 2.250	2"-12 x 2.250	1 3/4"-12 x 2.250	1 3/4"-12 x 3.500	2.624	3.812	.875						.312	1.688								---	.500							4.312	3.750		2.000	7.750	3.000	8.500
	2.500	1 7/8"-12 x 3.000	2 1/2"-12 x 3.000	2 1/4"-12 x 3.000	2 1/4"-12 x 4.500	3.124	3.812	1.000						.312	2.062								---	.500							4.312	3.750		2.250	8.000	3.250	8.750
	3.000	2 1/4"-12 x 3.500	3"-12 x 3.500	2 3/4"-12 x 3.500	2 3/4"-12 x 5.500	3.749	---	1.000						---	2.625								.500	---							---	---		2.250	8.000	3.250	8.750
	3.500	2 1/2"-12 x 3.500	3 1/2"-12 x 3.500	3 1/4"-12 x 3.500	3 1/4"-12 x 6.500	4.249	---	1.000						---	3.000								.500	---							---	---		2.250	8.000	3.250	8.750
6.000	1.375	1"-14 x 1.625	1 3/8"-12 x 1.625	1 1/4"-12 x 1.625	1 1/4"-12 x 2.500	1.999	3.267	.625	1.485	1.000	3.219	3.594	.140	.312	1.125	6.500	3/4	.625	2.000	1.500	.594	.750	---	.500	1.500	5.000	1.000	6.250	3.250	4.879	3.734	3.000	.500	1.625	8.125	2.750	9.125
	1.750	1 1/4"-12 x 2.000	1 3/4"-12 x 2.000	1 1/2"-12 x 2.000	1 1/2"-12 x 3.000	2.374	3.267	.750						.312	1.500			.625					---	.500							3.734	3.000		1.875	8.375	3.000	9.375
	2.000	1 1/2"-12 x 2.250	2"-12 x 2.250	1 3/4"-12 x 2.250	1 3/4"-12 x 3.500	2.624	3.812	.875						.312	1.688			.625					---	.500							4.312	3.750		2.000	8.500	3.125	9.500
	2.500	1 7/8"-12 x 3.000	2 1/2"-12 x 3.000	2 1/4"-12 x 3.000	2 1/4"-12 x 4.500	3.124	3.812	1.000						.312	2.062			.625					---	.500							4.312	3.750		2.250	8.750	3.375	9.750
	3.000	2 1/4"-12 x 3.500	3"-12 x 3.500	2 3/4"-12 x 3.500	2 3/4"-12 x 5.500	3.749	4.700	1.000						.375	2.625			.625					---	.500							5.562	4.500		2.250	8.750	3.375	9.750
	3.500	2 1/2"-12 x 3.500	3 1/2"-12 x 3.500	3 1/4"-12 x 3.500	3 1/4"-12 x 6.500	4.249	5.200	1.000						.375	3.000			.625					---	.500							6.062	5.000		2.250	8.750	3.375	9.750
	4.000	3"-12 x 4.000	4"-12 x 4.000	3 3/4"-12 x 4.000	3 3/4"-12 x 7.500	4.749	---	1.000						---	3.375			.750					.500	---							---	---		2.250	8.750	3.375	9.750
BORE	MM	KM & KF	KD	KI	KA	B	BC	C	CA	CD	CM	CN	CP	CS	D	E	EE	F	G	J	K	KN	KS	KU	L	LB	MR	OD	P	R	RR	RS	TR	WB	XC	Y	ZC

NEVA DESIGN

2.25

FILE: 2.25_LM25S2.dwg REV: 02/09/2010

27650 Groesbeck Hwy • Roseville, MI 48066-2759 • Phone 586.775.7211 • Fax 586.775.4545 • Toll Free 800.526.7968 • e-mail: sales@peninsularcylinders.com • www.peninsularcylinders.com

CAP FIXED EYE

Medium Duty Aluminum Air Cylinder

Peninsular Mounting Style: **LM 25**

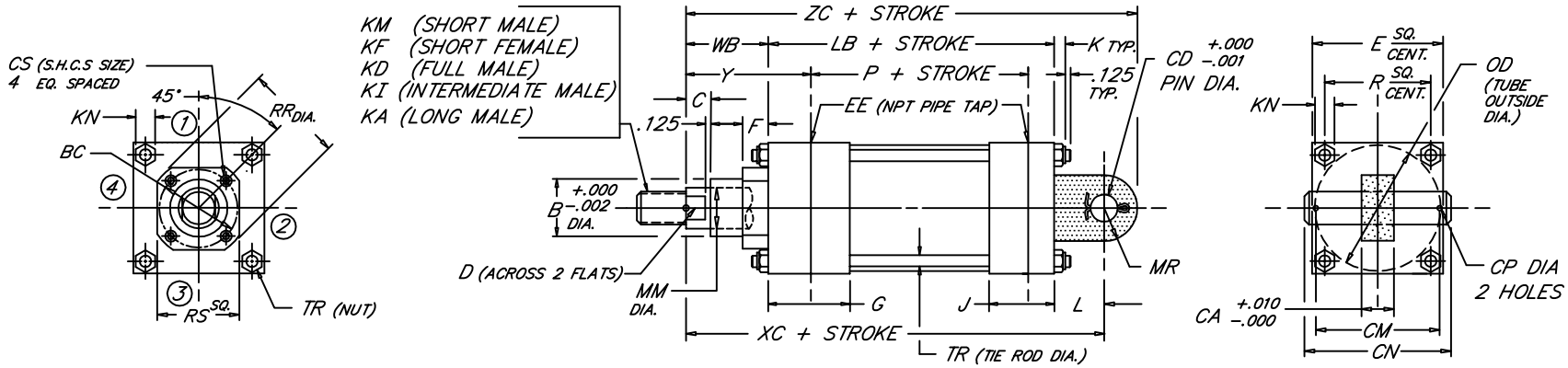

BORE	ROD MM	ROD THREAD X LENGTH KM & KF	KD	KI	KA	B	BC	C	CA	CD	CM	CN	CP	CS	D	E	NPT EE	F	G	J	K	KN	L	LB	MR	OD	P	R	RR	RS	TR	WB	XC	Y	ZC
8.000	1.375	1"-14 x 1.625	1 3/8"-12 x 1.625	1 1/4"-12 x 1.625	1 1/4"-12 x 2.500	1.999	3.267	.625	1.485	1.000	3.219	3.594	.140	.312	1.125	8.500	3/4	.625	2.000	1.500	.750	.938	1.500	5.125	1.000	8.450	3.375	6.435	3.734	3.000	.625	1.625	8.250	2.750	9.250
	1.750	1 1/4"-12 x 2.000	1 3/4"-12 x 2.000	1 1/2"-12 x 2.000	1 1/2"-12 x 3.000	2.374	3.267	.750						.312	1.500														3.734	3.000		1.875	8.500	3.000	9.500
	2.000	1 1/2"-12 x 2.250	2"-12 x 2.250	1 3/4"-12 x 2.250	1 3/4"-12 x 3.500	2.624	3.812	.875						.312	1.688														4.312	3.750		2.000	8.625	3.125	9.625
	2.500	1 7/8"-12 x 3.000	2 1/2"-12 x 3.000	2 1/4"-12 x 3.000	2 1/4"-12 x 4.500	3.124	3.812	1.000						.312	2.062														4.312	3.750		2.250	8.875	3.375	9.875
	3.000	2 1/4"-12 x 3.500	3"-12 x 3.500	2 3/4"-12 x 3.500	2 3/4"-12 x 5.500	3.749	4.700	1.000						.375	2.625														5.562	4.500		2.250	8.875	3.375	9.875
	3.500	2 1/2"-12 x 3.500	3 1/2"-12 x 3.500	3 1/4"-12 x 3.500	3 1/4"-12 x 6.500	4.249	5.200	1.000						.375	3.000														6.062	5.000		2.250	8.875	3.375	9.875
	4.000	3"-12 x 4.000	4"-12 x 4.000	3 3/4"-12 x 4.000	3 3/4"-12 x 7.500	4.749	5.700	1.000						.375	3.375														6.562	5.500		2.250	8.875	3.375	9.875
	4.500	3 1/4"-12 x 4.500	4 1/2"-12 x 4.500	4 1/4"-12 x 4.500	4 1/4"-12 x 8.250	5.249	6.200	1.000						.375	3.875														7.062	6.000		2.250	8.875	3.375	9.875
	5.000	3 1/2"-12 x 5.000	5"-12 x 5.000	4 3/4"-12 x 5.000	4 3/4"-12 x 9.000	5.749	6.700	1.000						.375	4.250														7.562	6.500		2.250	8.875	3.375	9.875
	5.500	4"-12 x 5.500	5 1/2"-12 x 5.500	5 1/4"-12 x 5.500	5 1/4"-12 x 10.000	6.249	7.125	1.000						.375	4.625														7.938	7.000		2.250	8.875	3.375	9.875
10.000	1.750	1 1/4"-12 x 2.000	1 3/4"-12 x 2.000	1 1/2"-12 x 2.000	1 1/2"-12 x 3.000	2.374	3.812	.750	1.985	1.375	4.250	4.656	.173	.312	1.500	10.625	1	.625	2.250	2.000	.875	1.062	2.125	6.375	1.375	10.450	4.250	7.920	4.312	3.750	.750	1.875	10.375	3.062	11.750
	2.000	1 1/2"-12 x 2.250	2"-12 x 2.250	1 3/4"-12 x 2.250	1 3/4"-12 x 3.500	2.624	3.812	.875						.312	1.688														4.312	3.750		2.000	10.500	3.187	11.875
	2.500	1 7/8"-12 x 3.000	2 1/2"-12 x 3.000	2 1/4"-12 x 3.000	2 1/4"-12 x 4.500	3.124	3.812	1.000						.312	2.062														4.312	3.750		2.250	10.750	3.437	12.125
	3.000	2 1/4"-12 x 3.500	3"-12 x 3.500	2 3/4"-12 x 3.500	2 3/4"-12 x 5.500	3.749	4.700	1.000						.375	2.625														5.562	4.500		2.250	10.750	3.437	12.125
	3.500	2 1/2"-12 x 3.500	3 1/2"-12 x 3.500	3 1/4"-12 x 3.500	3 1/4"-12 x 6.500	4.249	5.200	1.000						.375	3.000														6.062	5.000		2.250	10.750	3.437	12.125
	4.000	3"-12 x 4.000	4"-12 x 4.000	3 3/4"-12 x 4.000	3 3/4"-12 x 7.500	4.749	5.700	1.000						.375	3.375														6.562	5.500		2.250	10.750	3.437	12.125
	4.500	3 1/4"-12 x 4.500	4 1/2"-12 x 4.500	4 1/4"-12 x 4.500	4 1/4"-12 x 8.250	5.249	6.200	1.000						.375	3.875														7.062	6.000		2.250	10.750	3.437	12.125
	5.000	3 1/2"-12 x 5.000	5"-12 x 5.000	4 3/4"-12 x 5.000	4 3/4"-12 x 9.000	5.749	6.700	1.000						.375	4.250														7.562	6.500		2.250	10.750	3.437	12.125
	5.500	4"-12 x 5.500	5 1/2"-12 x 5.500	5 1/4"-12 x 5.500	5 1/4"-12 x 10.000	6.249	7.125	1.000						.375	4.625														7.938	7.000		2.250	10.750	3.437	12.125
12.000	2.000	1 1/2"-12 x 2.250	2"-12 x 2.250	1 3/4"-12 x 2.250	1 3/4"-12 x 3.500	2.624	3.812	.875	2.485	1.750	5.250	5.656	.173	.312	1.688	12.750	1	.625	2.250	2.000	.875	1.062	2.250	6.875	1.750	12.450	4.750	9.405	4.312	3.750	.750	2.000	11.125	3.187	12.875
	2.500	1 7/8"-12 x 3.000	2 1/2"-12 x 3.000	2 1/4"-12 x 3.000	2 1/4"-12 x 4.500	3.124	3.812	1.000						.312	2.062														4.312	3.750		2.250	11.375	3.437	13.125
	3.000	2 1/4"-12 x 3.500	3"-12 x 3.500	2 3/4"-12 x 3.500	2 3/4"-12 x 5.500	3.749	4.700	1.000						.375	2.625														5.562	4.500		2.250	11.375	3.437	13.125
	3.500	2 1/2"-12 x 3.500	3 1/2"-12 x 3.500	3 1/4"-12 x 3.500	3 1/4"-12 x 6.500	4.249	5.200	1.000						.375	3.000														6.062	5.000		2.250	11.375	3.437	13.125
	4.000	3"-12 x 4.000	4"-12 x 4.000	3 3/4"-12 x 4.000	3 3/4"-12 x 7.500	4.749	5.700	1.000						.375	3.375														6.562	5.500		2.250	11.375	3.437	13.125
	4.500	3 1/4"-12 x 4.500	4 1/2"-12 x 4.500	4 1/4"-12 x 4.500	4 1/4"-12 x 8.250	5.249	6.200	1.000						.375	3.875														7.062	6.000		2.250	11.375	3.437	13.125
	5.000	3 1/2"-12 x 5.000	5"-12 x 5.000	4 3/4"-12 x 5.000	4 3/4"-12 x 9.000	5.749	6.700	1.000						.375	4.250														7.562	6.500		2.250	11.375	3.437	13.125
	5.500	4"-12 x 5.500	5 1/2"-12 x 5.500	5 1/4"-12 x 5.500	5 1/4"-12 x 10.000	6.249	7.125	1.000						.375	4.625														7.938	7.000		2.250	11.375	3.437	13.125
14.000	2.500	1 7/8"-12 x 3.000	2 1/2"-12 x 3.000	2 1/4"-12 x 3.000	2 1/4"-12 x 4.500	3.124	3.812		2.485	2.000	5.281	5.719	.204	.312	2.062	14.750	1 1/4	.625	2.750	2.250	1.000	1.250	2.500	8.125	2.000	14.450	5.625	10.889	4.312	3.750	.875	2.250	12.875	3.688	14.875
	3.000	2 1/4"-12 x 3.500	3"-12 x 3.500	2 3/4"-12 x 3.500	2 3/4"-12 x 5.500	3.749	4.700							.375	2.625														5.562	4.500					
	3.500	2 1/2"-12 x 3.500	3 1/2"-12 x 3.500	3 1/4"-12 x 3.500	3 1/4"-12 x 6.500	4.249	5.200							.375	3.000														6.062	5.000					
	4.000	3"-12 x 4.000	4"-12 x 4.000	3 3/4"-12 x 4.000	3 3/4"-12 x 7.500	4.749	5.700							.375	3.375														6.562	5.500					
	4.500	3 1/4"-12 x 4.500	4 1/2"-12 x 4.500	4 1/4"-12 x 4.500	4 1/4"-12 x 8.250	5.249	6.200							.375	3.875														7.062	6.000					
	5.000	3 1/2"-12 x 5.000	5"-12 x 5.000	4 3/4"-12 x 5.000	4 3/4"-12 x 9.000	5.749	6.700							.375	4.250														7.562	6.500					
	5.500	4"-12 x 5.500	5 1/2"-12 x 5.500	5 1/4"-12 x 5.500	5 1/4"-12 x 10.000	6.249	7.125							.375	4.625														7.938	7.000					
BORE	MM	KM & KF	KD	KI	KA	B	BC	C	CA	CD	CM	CN	CP	CS	D	E	EE	F	G	J	K	KN	L	LB	MR	OD	P	R	RR	RS	TR	WB	XC	Y	ZC

NEW DESIGN

FILE: 2.25_LM25L2.dwg REV: 02/09/2010

27650 Groesbeck Hwy • Roseville, MI 48066-2759 • Phone 586.775.7211 • Fax 586.775.4545 • Toll Free 800.526.7968 • e-mail: sales@peninsularcylinders.com • www.peninsularcylinders.com

CAP DETACHABLE CLEVIS

Peninsular Mounting Style: **LM 27**

Medium Duty Aluminum Air Cylinder

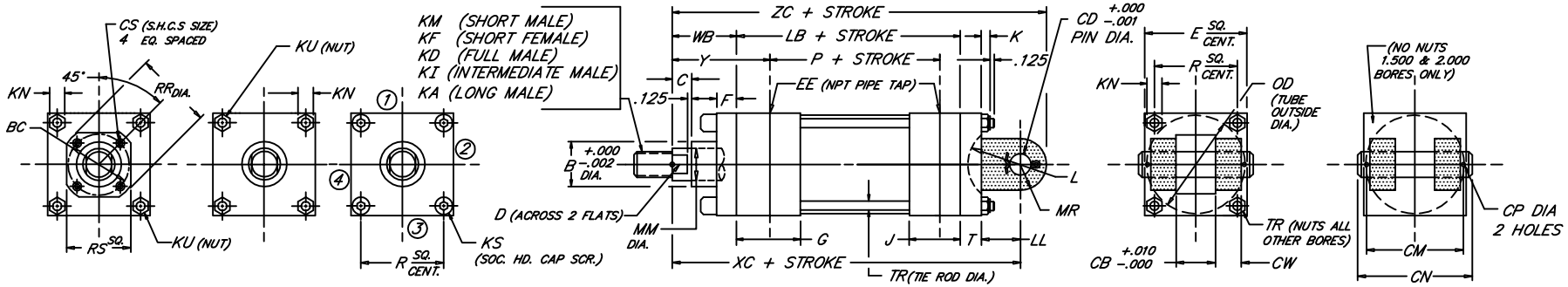

BORE	ROD MM	ROD THREAD X LENGTH KM & KF	KD	KI	KA	B	BC	C	CB	CD	CM	CN	CP	CS	CW	D	E	NPT EE	F	G	J	K	KN	KS	KU	L	LB	LL	MR	OD	P	R	RR	RS	T	TR	WB	XC	Y	ZC
1.500	.625	7/16"-20 x .750	5/8"-18 x .750	1/2"-20 x .750	1/2"-20 x 1.125	1.124	---	.375	.765	.500	1.938	2.281	.106	---	.500	.500	2.000	3/8	.375	1.500	1.000	.312	.438	---	.250	.625	3.625	.375	.625	1.750	2.335	1.428	---	---	.375	.250	1.000	5.375	1.875	6.000
	1.000	3/4"-16 x 1.125	1"-14 x 1.125	7/8"-14 x 1.125	7/8"-14 x 1.875	1.499		.500								.875																					1.375	5.750	2.250	6.375
2.000	.625	7/16"-20 x .750	5/8"-18 x .750	1/2"-20 x .750	1/2"-20 x 1.125	1.124	---	.375	.765	.500	1.938	2.281	.106	---	.500	.500	2.500	3/8	.375	1.500	1.000	.344	.500	---	.312	.625	3.625	.375	.625	2.250	2.335	1.838	---	---	.375	.312	1.000	5.375	1.875	6.000
	1.000	3/4"-16 x 1.125	1"-14 x 1.125	7/8"-14 x 1.125	7/8"-14 x 1.875	1.499		.500								.875																					1.375	5.750	2.250	6.375
	1.375	1"-14 x 1.625	1 3/8"-12 x 1.625	1 1/4"-12 x 1.625	1 1/4"-12 x 2.500	1.999		.625								1.125																					1.625	6.000	2.500	6.625
2.500	.625	7/16"-20 x .750	5/8"-18 x .750	1/2"-20 x .750	1/2"-20 x 1.125	1.124	---	.375	.765	.500	1.938	2.281	.106	---	.500	.500	3.000	3/8	.375	1.500	1.000	.344	.500	.312	---	.625	3.750	.375	.625	2.750	2.460	2.192	---	---	.375	.312	1.000	5.500	1.875	6.125
	1.000	3/4"-16 x 1.125	1"-14 x 1.125	7/8"-14 x 1.125	7/8"-14 x 1.875	1.499		.500								.875																					1.375	5.875	2.250	6.500
	1.375	1"-14 x 1.625	1 3/8"-12 x 1.625	1 1/4"-12 x 1.625	1 1/4"-12 x 2.500	1.999		.625								1.125																					1.625	6.125	2.500	6.750
	1.750	1 1/4"-12 x 2.000	1 3/4"-12 x 2.000	1 1/2"-12 x 2.000	1 1/2"-12 x 3.000	2.374		.750								1.500																					1.875	6.375	2.750	7.000
3.250	1.000	3/4"-16 x 1.125	1"-14 x 1.125	7/8"-14 x 1.125	7/8"-14 x 1.875	1.499	---	.500	1.265	.750	2.719	3.094	.140	---	.625	.875	3.750	1/2	.625	1.750	1.250	.438	.562	.375	---	.875	4.250	.625	.875	3.500	2.750	2.758	---	---	.625	.375	1.375	6.875	2.375	7.750
	1.375	1"-14 x 1.625	1 3/8"-12 x 1.625	1 1/4"-12 x 1.625	1 1/4"-12 x 2.500	1.999		.625								1.125																					1.625	7.125	2.625	8.000
	1.750	1 1/4"-12 x 2.000	1 3/4"-12 x 2.000	1 1/2"-12 x 2.000	1 1/2"-12 x 3.000	2.374		.750								1.500																					1.875	7.375	2.875	8.250
	2.000	1 1/2"-12 x 2.250	2"-12 x 2.250	1 3/4"-12 x 2.250	1 3/4"-12 x 3.500	2.624		.875								1.688																					2.000	7.500	3.000	8.375
4.000	1.000	3/4"-16 x 1.125	1"-14 x 1.125	7/8"-14 x 1.125	7/8"-14 x 1.875	1.499	2.562	.500	1.265	.750	2.719	3.094	.140	.250	.625	.875	4.500	1/2	.625	1.750	1.250	.438	.562	---	.375	.875	4.250	.625	.875	4.250	2.750	3.323	2.969	2.500	.625	.375	1.375	6.875	2.375	7.750
	1.375	1"-14 x 1.625	1 3/8"-12 x 1.625	1 1/4"-12 x 1.625	1 1/4"-12 x 2.500	1.999	2.562	.625						.250		1.125								---	.375								2.969	2.500			1.625	7.125	2.625	8.000
	1.750	1 1/4"-12 x 2.000	1 3/4"-12 x 2.000	1 1/2"-12 x 2.000	1 1/2"-12 x 3.000	2.374	3.267	.750						.312		1.500								---	.375								3.734	3.000			1.875	7.375	2.875	8.250
	2.000	1 1/2"-12 x 2.250	2"-12 x 2.250	1 3/4"-12 x 2.250	1 3/4"-12 x 3.500	2.624	---	.875						---		1.688								.375	---								---	---			2.000	7.500	3.000	8.375
	2.500	1 7/8"-12 x 3.000	2 1/2"-12 x 3.000	2 1/4"-12 x 3.000	2 1/4"-12 x 4.500	3.124	---	1.000						---		2.062								.375	---								---	---			2.250	7.750	3.250	8.625
5.000	1.000	3/4"-16 x 1.125	1"-14 x 1.125	7/8"-14 x 1.125	7/8"-14 x 1.875	1.499	2.562	.500	1.265	.750	2.719	3.094	.140	.250	.625	.875	5.500	1/2	.625	1.750	1.250	.594	.750	---	.500	.875	4.500	.625	.875	5.250	3.000	4.101	2.969	2.500	.625	.500	1.375	7.125	2.375	8.000
	1.375	1"-14 x 1.625	1 3/8"-12 x 1.625	1 1/4"-12 x 1.625	1 1/4"-12 x 2.500	1.999	2.562	.625						.250		1.125								---	.500								2.969	2.500			1.625	7.375	2.625	8.250
	1.750	1 1/4"-12 x 2.000	1 3/4"-12 x 2.000	1 1/2"-12 x 2.000	1 1/2"-12 x 3.000	2.374	3.267	.750						.312		1.500								---	.500								3.734	3.000			1.875	7.625	2.875	8.500
	2.000	1 1/2"-12 x 2.250	2"-12 x 2.250	1 3/4"-12 x 2.250	1 3/4"-12 x 3.500	2.624	3.812	.875						.312		1.688								---	.500								4.312	3.750			2.000	7.750	3.000	8.625
	2.500	1 7/8"-12 x 3.000	2 1/2"-12 x 3.000	2 1/4"-12 x 3.000	2 1/4"-12 x 4.500	3.124	3.812	1.000						.312		2.062								---	.500								4.312	3.750			2.250	8.000	3.250	8.875
	3.000	2 1/4"-12 x 3.500	3"-12 x 3.500	2 3/4"-12 x 3.500	2 3/4"-12 x 5.500	3.749	---	1.000						---		2.625								.500	---								---	---			2.250	8.000	3.250	8.875
	3.500	2 1/2"-12 x 3.500	3 1/2"-12 x 3.500	3 1/4"-12 x 3.500	3 1/4"-12 x 6.500	4.249	---	1.000						---		3.000								.500	---								---	---			2.250	8.000	3.250	8.875
6.000	1.375	1"-14 x 1.625	1 3/8"-12 x 1.625	1 1/4"-12 x 1.625	1 1/4"-12 x 2.500	1.999	3.267	.625	1.515	1.000	3.219	3.594	.140	.312	.750	1.125	6.500	3/4	.625	2.000	1.500	.594	.750	---	.500	1.125	5.000	.750	1.250	6.250	3.250	4.879	3.734	3.000	.750	.500	1.625	8.125	2.750	9.375
	1.750	1 1/4"-12 x 2.000	1 3/4"-12 x 2.000	1 1/2"-12 x 2.000	1 1/2"-12 x 3.000	2.374	3.267	.750						.312		1.500			.625					---	.500								3.734	3.000			1.875	8.375	3.000	9.625
	2.000	1 1/2"-12 x 2.250	2"-12 x 2.250	1 3/4"-12 x 2.250	1 3/4"-12 x 3.500	2.624	3.812	.875						.312		1.688			.625					---	.500								4.312	3.750			2.000	8.500	3.125	9.750
	2.500	1 7/8"-12 x 3.000	2 1/2"-12 x 3.000	2 1/4"-12 x 3.000	2 1/4"-12 x 4.500	3.124	3.812	1.000						.312		2.062			.625					---	.500								4.312	3.750			2.250	8.750	3.375	10.000
	3.000	2 1/4"-12 x 3.500	3"-12 x 3.500	2 3/4"-12 x 3.500	2 3/4"-12 x 5.500	3.749	4.700	1.000						.375		2.625			.625					---	.500								5.562	4.500			2.250	8.750	3.375	10.000
	3.500	2 1/2"-12 x 3.500	3 1/2"-12 x 3.500	3 1/4"-12 x 3.500	3 1/4"-12 x 6.500	4.249	5.200	1.000						.375		3.000			.625					---	.500								6.062	5.000			2.250	8.750	3.375	10.000
	4.000	3"-12 x 4.000	4"-12 x 4.000	3 3/4"-12 x 4.000	3 3/4"-12 x 7.500	4.749	---	1.000						---		3.375			.750					.500	---								---	---			2.250	8.750	3.375	10.000
BORE	MM	KM & KF	KD	KI	KA	B	BC	C	CB	CD	CM	CN	CP	CS	CW	D	E	EE	F	G	J	K	KN	KS	KU	L	LB	LL	MR	OD	P	R	RR	RS	T	TR	WB	XC	Y	ZC

NEVA DESIGN

2.27

FILE: 2.27_LM27S2.dwg REV: 02/09/2010

27650 Groesbeck Hwy • Roseville, MI 48066-2759 • Phone 586.775.7211 • Fax 586.775.4545 • Toll Free 800.526.7968 • e-mail: sales@peninsularcylinders.com • www.peninsularcylinders.com

"PUSH" & "PULL" Force Charts - Pneumatic Cylinders

for Peninsular - Series LM - Medium-Duty, NFPA Air Cylinders

"PUSH" - (EXTENDED CYLINDER STROKE) CYLINDER FORCES IN POUNDS

Cylinder Bore Size	Air Line Pressure (PSI)													Line Pressure
	60	65	70	75	80	85	90	95	100	105	110	115	120	←
1 1/2	106	115	124	133	141	150	159	168	177	186	194	203	212	
2	188	204	220	236	251	267	283	298	314	330	346	361	377	
2 1/2	295	319	344	368	393	417	442	466	491	515	540	565	589	
3 1/4	498	539	581	622	664	705	747	788	830	871	913	954	995	
4	754	817	880	942	1005	1068	1131	1194	1257	1319	1382	1445	1508	
5	1178	1276	1374	1473	1571	1669	1767	1865	1964	2062	2160	2258	2356	
6	1696	1838	1979	2121	2262	2403	2545	2686	2827	2969	3110	3252	3393	
8	3016	3267	3519	3770	4021	4273	4524	4775	5027	5278	5529	5781	6032	
10	4712	5105	5498	5891	6283	6676	7069	7461	7854	8247	8639	9032	9425	
12	6786	7351	7917	8482	9048	9613	10179	10744	11310	11875	12441	13006	13572	
14	9236	10006	10776	11545	12315	13085	13854	14624	15394	16164	16933	17703	18473	

Note: "Push" Forces in Pounds = (Cylinder Bore Diameter)^2 x .7854 x Line Pressure

"PULL" - (RETRACTED CYLINDER STROKE) CYLINDER FORCES IN POUNDS

Cylinder Bore Size	Cylinder Rod DIA	Air Line Pressure (PSI)													Line Pressure
		60	65	70	75	80	85	90	95	100	105	110	115	120	←
1 1/2	5/8	88	95	102	110	117	124	131	139	146	153	161	168	175	
	1	59	64	69	74	79	83	88	93	98	103	108	113	118	
2	5/8	170	184	198	213	227	241	255	269	283	298	312	326	340	
	1	141	153	165	177	188	200	212	224	236	247	259	271	283	
	1 3/8	99	108	116	124	133	141	149	157	166	174	182	191	199	
2 1/2	5/8	276	299	322	345	368	391	414	437	460	483	506	529	552	
	1	247	268	289	309	330	350	371	392	412	433	454	474	495	
	1 3/8	205	223	240	257	274	291	308	325	342	360	377	394	411	
	1 3/4	150	163	175	188	200	213	225	238	250	263	275	288	300	
3 1/4	1	451	488	526	563	601	638	676	713	751	789	826	864	901	
	1 3/8	409	443	477	511	545	579	613	647	681	715	749	783	817	
	1 3/4	353	383	412	442	471	501	530	560	589	619	648	677	707	
	2	309	335	361	387	412	438	464	490	515	541	567	593	619	
4	1	707	766	825	884	942	1001	1060	1119	1178	1237	1296	1355	1414	
	1 3/8	665	720	776	831	887	942	997	1053	1108	1164	1219	1274	1330	
	1 3/4	610	660	711	762	813	864	915	965	1016	1067	1118	1169	1219	
	2	565	613	660	707	754	801	848	895	942	990	1037	1084	1131	
	2 1/2	459	498	536	574	613	651	689	727	766	804	842	881	919	
5	1	1131	1225	1319	1414	1508	1602	1696	1791	1885	1979	2073	2168	2262	
	1 3/8	1089	1180	1271	1361	1452	1543	1634	1724	1815	1906	1997	2087	2178	
	1 3/4	1034	1120	1206	1292	1378	1465	1551	1637	1723	1809	1895	1981	2068	
	2	990	1072	1155	1237	1319	1402	1484	1567	1649	1732	1814	1897	1979	
	2 1/2	884	957	1031	1104	1178	1252	1325	1399	1473	1546	1620	1694	1767	
	3	754	817	880	942	1005	1068	1131	1194	1257	1319	1382	1445	1508	
	3 1/2	601	651	701	751	801	851	901	951	1001	1051	1102	1152	1202	

This "PULL" Chart is continued on the next page

"PUSH" & "PULL" Force Charts - Pneumatic Cylinders

for Peninsular - Series LM - Medium-Duty, NFPA Air Cylinders

This "PULL" Chart is continued from the previous page

"PULL" - (RETRACTED CYLINDER STROKE) CYLINDER FORCES IN POUNDS

Cylinder Bore Size	Cylinder Rod DIA	Air Line Pressure (PSI)													Line Pressure
		60	65	70	75	80	85	90	95	100	105	110	115	120	←
6	1 3/8	1607	1741	1875	2009	2143	2277	2411	2545	2679	2813	2947	3081	3215	
	1 3/4	1552	1681	1811	1940	2070	2199	2328	2458	2587	2716	2846	2975	3104	
	2	1508	1634	1759	1885	2011	2136	2262	2388	2513	2639	2765	2890	3016	
	2 1/2	1402	1519	1636	1752	1869	1986	2103	2220	2337	2453	2570	2687	2804	
	3	1272	1378	1484	1590	1696	1802	1909	2015	2121	2227	2333	2439	2545	
	3 1/2	1119	1212	1306	1399	1492	1586	1679	1772	1865	1959	2052	2145	2238	
	4	942	1021	1100	1178	1257	1335	1414	1492	1571	1649	1728	1806	1885	
8	1 3/8	2927	3171	3415	3659	3902	4146	4390	4634	4878	5122	5366	5610	5854	
	1 3/4	2872	3111	3350	3590	3829	4068	4307	4547	4786	5025	5265	5504	5743	
	2	2827	3063	3299	3534	3770	4006	4241	4477	4712	4948	5184	5419	5655	
	2 1/2	2721	2948	3175	3402	3629	3855	4082	4309	4536	4762	4989	5216	5443	
	3	2592	2808	3024	3240	3456	3672	3888	4104	4320	4536	4752	4968	5184	
	3 1/2	2439	2642	2845	3048	3252	3455	3658	3861	4064	4268	4471	4674	4877	
	4	2262	2450	2639	2827	3016	3204	3393	3581	3770	3958	4147	4335	4524	
	4 1/2	2062	2233	2405	2577	2749	2921	3093	3264	3436	3608	3780	3952	4123	
	5	1838	1991	2144	2297	2450	2604	2757	2910	3063	3216	3369	3523	3676	
	5 1/2	1590	1723	1856	1988	2121	2253	2386	2518	2651	2783	2916	3048	3181	
10	1 3/4	4568	4949	5329	5710	6091	6471	6852	7233	7613	7994	8375	8755	9136	
	2	4524	4901	5278	5655	6032	6409	6786	7163	7540	7917	8294	8671	9048	
	2 1/2	4418	4786	5154	5522	5891	6259	6627	6995	7363	7731	8099	8468	8836	
	3	4288	4646	5003	5360	5718	6075	6432	6790	7147	7504	7862	8219	8577	
	3 1/2	4135	4480	4824	5169	5514	5858	6203	6547	6892	7236	7581	7926	8270	
	4	3958	4288	4618	4948	5278	5608	5938	6267	6597	6927	7257	7587	7917	
	4 1/2	3758	4071	4384	4698	5011	5324	5637	5950	6264	6577	6890	7203	7516	
	5	3534	3829	4123	4418	4712	5007	5301	5596	5891	6185	6480	6774	7069	
	5 1/2	3287	3561	3835	4109	4383	4656	4930	5204	5478	5752	6026	6300	6574	
12	2	6597	7147	7697	8247	8796	9346	9896	10446	10996	11545	12095	12645	13195	
	2 1/2	6491	7032	7573	8114	8655	9196	9737	10278	10819	11360	11901	12442	12983	
	3	6362	6892	7422	7952	8482	9012	9543	10073	10603	11133	11663	12193	12723	
	3 1/2	6209	6726	7243	7761	8278	8795	9313	9830	10348	10865	11382	11900	12417	
	4	6032	6535	7037	7540	8042	8545	9048	9550	10053	10556	11058	11561	12064	
	4 1/2	5832	6318	6804	7289	7775	8261	8747	9233	9719	10205	10691	11177	11663	
	5	5608	6075	6542	7010	7477	7944	8412	8879	9346	9814	10281	10748	11216	
	5 1/2	5360	5807	6254	6700	7147	7594	8041	8487	8934	9381	9827	10274	10721	
14	2 1/2	8942	9687	10432	11177	11922	12668	13413	14158	14903	15648	16393	17138	17884	
	3	8812	9547	10281	11015	11750	12484	13218	13953	14687	15421	16156	16890	17624	
	3 1/2	8659	9381	10102	10824	11545	12267	12989	13710	14432	15153	15875	16596	17318	
	4	8482	9189	9896	10603	11310	12017	12723	13430	14137	14844	15551	16258	16965	
	4 1/2	8282	8972	9662	10353	11043	11733	12423	13113	13803	14494	15184	15874	16564	
	5	8058	8730	9401	10073	10744	11416	12087	12759	13430	14102	14773	15445	16116	
	5 1/2	7811	8462	9113	9764	10414	11065	11716	12367	13018	13669	14320	14971	15622	

Note: "Pull" Forces in Pounds = (Cylinder Bore Diameter)^2 - (Cylinder Rod Diameter)^2 x .7854 x Line Pressure

PENINSULAR®
CYLINDER CO.

Section 3

Table of Contents

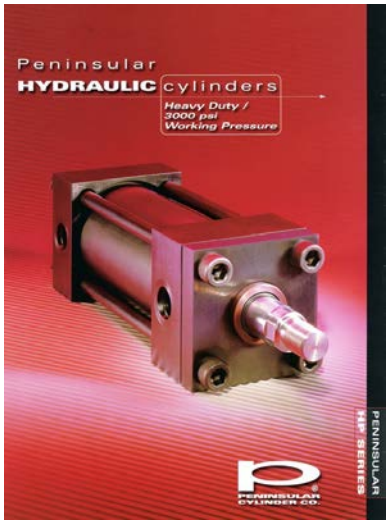

Model HP - *NFPA, High Pressure Hydraulic Cylinders*

Our Red Model HP - FAB Brochure - contains information about :

- ***FEATURES, ADVANTAGES & BENEFITS of the Model HP Hydraulic Cylinder***
- ***HOW TO ORDER the Model HP NFPA High-Pressure Hydraulic Cylinder***

Model HP - Hydraulic Cylinder Dimensional Data

Page 3.00 HP 0 — No Mount Single Rod — Available for Front or Rear Flush Mounts (MX0)

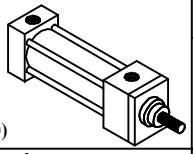

Page 3.01 HP 1 — Foot Side Lugs (MS2)

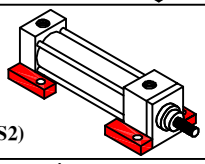

Page 3.02 HP 2 — Head Trunnion (MT1)

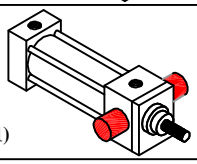

Page 3.03 HP 3 — Cap Fixed Clevis (MP1)

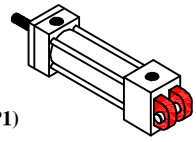

Page 3.04 HP 4 — Head Rectangular Flange (MF1)

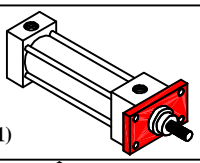

Page 3.05 HP 5 — Cap Rectangular Flange (MF2)

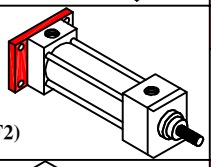

Page 3.06 HP 6 — Intermediate Trunnion (MT4)

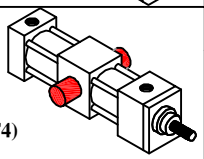

Page 3.07 HP 7 — Cap Trunnion (MT2)

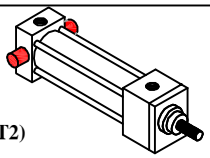

Page 3.08 HP 8 — Head Tie Rod Extended (MX3)

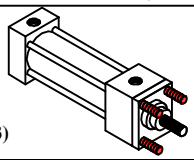

Page 3.11 HP 11 — Cap Tie Rod Extended (MX2)

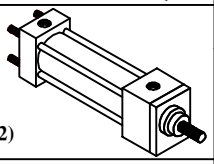

Page 3.12 HP 12 — Head & Cap Tie Rod Extended (MX1)

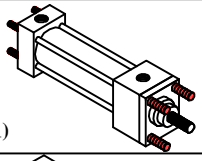

Page 3.14 HP 14 — End Lugs (MS7)

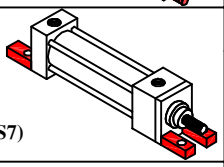

Page 3.15 HP 15 — Centerline Lugs (MS3)

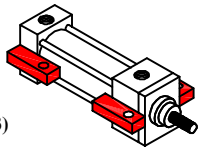

Page 3.16 HP 16 — Side Tapped (MS4)

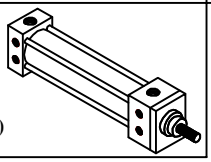

Page 3.17 HP 17 — Head Square Flange (MF5)

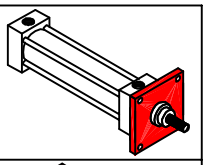

Page 3.18 HP 18 — Cap Square Flange (MF6)

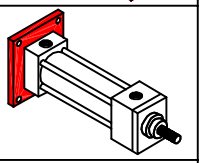

Page 3.22 HP 22 — Cap-Fixed Spherical Eye (MP5)

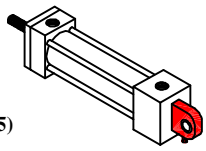

Page 3.25 HP 25 — Cap Fixed Eye (MP3)

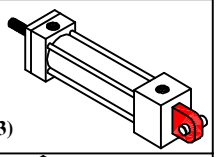

Page 3.28 HP 28 — Head Rectangular (ME5)

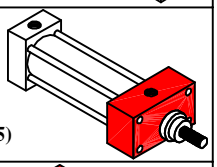

Page 3.29 HP 29 — Cap Rectangular (ME6)

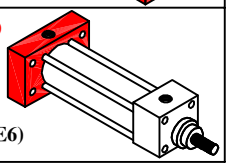

Pages 3.30 & 3.31

Cylinder "Push" & "Pull" Force Charts:
(use to select the correct cylinder Bore Size)

www.peninsularcylinders.com

1-800-526-7968

27650 Groesbeck Highway * Roseville, Michigan 48066-2759

(586) 775-7211 * (586) 775-4545 fax * email: sales@peninsularcylinders.com

REV. 2/9/2010

NO MOUNT

Peninsular
Mounting Style: **HP 0**

Heavy Duty Hydraulic Cylinder • 3000 P.S.I. Working Pressure • 5000 P.S.I. Rated Pressure

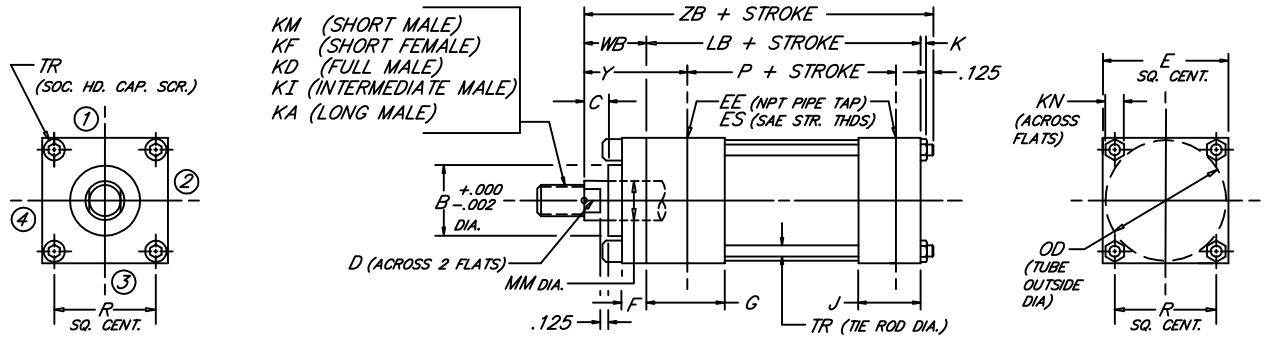

BORE	ROD MM	ROD THREAD X LENGTH KM & KF	KD	KI	KA	B	C	D	E	NPT EE	SAE ES	F	G	J	K	KN	LB	OD	P	R	TR	WB	Y	ZB
1.500	.625	7/16"-20 x .750	5/8"-18 x .750	1/2"-20 x .750	1/2"-20 x 1.125	1.124	.375	.500	2.500	1/2	-8	.375	1.750	1.500	.406	.562	4.625	1.875	2.875	1.625	.375	1.000	2.000	6.156
	1.000	3/4"-16 x 1.125	1"-14 x 1.125	7/8"-14 x 1.125	7/8"-14 x 1.875	1.499	.500	.875														1.375	2.375	6.531
2.000	1.000	3/4"-16 x 1.125	1"-14 x 1.125	7/8"-14 x 1.125	7/8"-14 x 1.875	1.499	.500	.875	3.000	1/2	-8	.625	1.750	1.500	.531	.750	4.625	2.375	2.875	2.050	.500	1.375	2.375	6.656
	1.375	1"-14 x 1.625	1 3/8"-12 x 1.625	1 1/4"-12 x 1.625	1 1/4"-12 x 2.500	1.999	.625	1.125														1.625	2.625	6.906
2.500	1.000	3/4"-16 x 1.125	1"-14 x 1.125	7/8"-14 x 1.125	7/8"-14 x 1.875	1.499	.500	.875	3.500	1/2	-8	.625	1.750	1.500	.531	.750	4.750	3.000	3.000	2.550	.500	1.375	2.375	6.781
	1.375	1"-14 x 1.625	1 3/8"-12 x 1.625	1 1/4"-12 x 1.625	1 1/4"-12 x 2.500	1.999	.625	1.125														1.625	2.625	7.031
	1.750	1 1/4"-12 x 2.000	1 3/4"-12 x 2.000	1 1/2"-12 x 2.000	1 1/2"-12 x 3.000	2.374	.750	1.500														1.875	2.875	7.281
3.250	1.375	1"-14 x 1.625	1 3/8"-12 x 1.625	1 1/4"-12 x 1.625	1 1/4"-12 x 2.500	1.999	.625	1.125	4.500	3/4	-12	.750	2.000	1.750	.656	.938	5.500	3.875	3.500	3.250	.625	1.625	2.750	7.906
	1.750	1 1/4"-12 x 2.000	1 3/4"-12 x 2.000	1 1/2"-12 x 2.000	1 1/2"-12 x 3.000	2.374	.750	1.500														1.875	3.000	8.156
	2.000	1 1/2"-12 x 2.250	2"-12 x 2.250	1 3/4"-12 x 2.250	1 3/4"-12 x 3.500	2.624	.875	1.688														2.000	3.125	8.281
4.000	1.750	1 1/4"-12 x 2.000	1 3/4"-12 x 2.000	1 1/2"-12 x 2.000	1 1/2"-12 x 3.000	2.374	.750	1.500	5.000	3/4	-12	.875	2.000	1.750	.656	.938	5.750	4.750	3.750	3.820	.625	1.875	3.000	8.406
	2.000	1 1/2"-12 x 2.250	2"-12 x 2.250	1 3/4"-12 x 2.250	1 3/4"-12 x 3.500	2.624	.875	1.688														2.000	3.125	8.531
	2.500	1 7/8"-12 x 3.000	2 1/2"-12 x 3.000	2 1/4"-12 x 3.000	2 1/4"-12 x 4.500	3.124	1.000	2.062														2.250	3.375	8.781
5.000	2.000	1 1/2"-12 x 2.250	2"-12 x 2.250	1 3/4"-12 x 2.250	1 3/4"-12 x 3.500	2.624	.875	1.688	6.500	3/4	-12	.875	2.000	1.750	.875	1.312	6.250	6.000	4.250	4.950	.875	2.000	3.125	9.250
	2.500	1 7/8"-12 x 3.000	2 1/2"-12 x 3.000	2 1/4"-12 x 3.000	2 1/4"-12 x 4.500	3.124	1.000	2.062														2.250	3.375	9.500
	3.000	2 1/4"-12 x 3.500	3"-12 x 3.500	2 3/4"-12 x 3.500	2 3/4"-12 x 5.500	3.749	1.000	2.625														2.250	3.375	9.500
	3.500	2 1/2"-12 x 3.500	3 1/2"-12 x 3.500	3 1/4"-12 x 3.500	3 1/4"-12 x 6.500	4.249	1.000	3.000														2.250	3.375	9.500
6.000	2.500	1 7/8"-12 x 3.000	2 1/2"-12 x 3.000	2 1/4"-12 x 3.000	2 1/4"-12 x 4.500	3.124	1.000	2.062	7.500	1	-16	1.000	2.250	2.250	1.000	1.500	7.375	7.000	4.875	5.730	1.000	2.250	3.500	10.750
	3.000	2 1/4"-12 x 3.500	3"-12 x 3.500	2 3/4"-12 x 3.500	2 3/4"-12 x 5.500	3.749		2.625																
	3.500	2 1/2"-12 x 3.500	3 1/2"-12 x 3.500	3 1/4"-12 x 3.500	3 1/4"-12 x 6.500	4.249		3.000																
	4.000	3"-12 x 4.000	4"-12 x 4.000	3 3/4"-12 x 4.000	3 3/4"-12 x 7.500	4.749		3.375																
BORE	MM	KM & KF	KD	KI	KA	B	C	D	E	EE	ES	F	G	J	K	KN	LB	OD	P	R	TR	WB	Y	ZB

FILE: 3.00_HP00S2.dwg REV: 02/09/2010

27650 Groesbeck Hwy Roseville, MI 48066-2759 Phone 586.775.7211 • Fax 586.775.4545 Toll Free 800.526.7968 e-mail: sales@peninsularcylinders.com www.peninsularcylinders.com

NO MOUNT

Heavy Duty Hydraulic Cylinder

• 3000 P.S.I. Working Pressure • 5000 P.S.I. Rated Pressure

Peninsular Mounting Style: **HP 0**

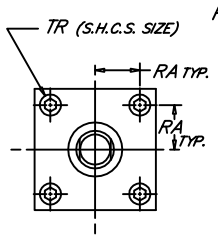

8" BORE

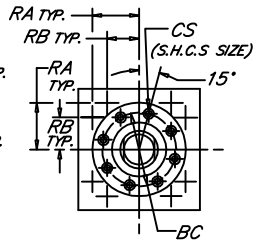

10" & 12" BORES

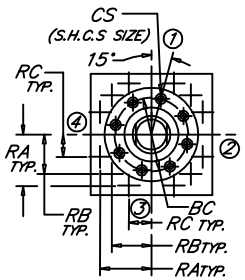

14" BORE

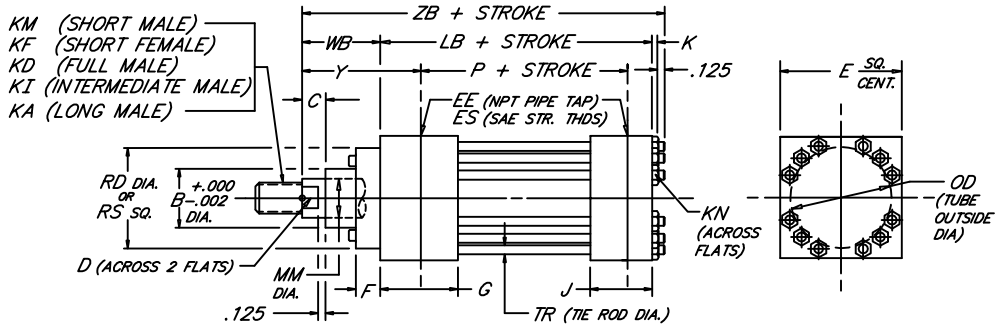

BORE	ROD MM	ROD THREAD X LENGTH KM & KF	KD	KI	KA	B	BC	C	CS	D	E	NPT EE	SAE ES	F	G	J	K	KN	LB	P	OD	RA	RB	RC	RD	RS	TR	WB	Y	ZB
8.000	3.500	2 1/2"-12 x 3.500	3 1/2"-12 x 3.500	3 1/4"-12 x 3.500	3 1/4"-12 x 6.500	4.249	---	1.000	---	3.000	9.500	1 1/2	-24	1.000	3.000	3.000	1.188	1.844	9.500	6.125	9.250	3.750	---	---	---	9.500	1.250	2.250	3.938	13.063
	4.000	3"-12 x 4.000	4"-12 x 4.000	3 3/4"-12 x 4.000	3 3/4"-12 x 7.500	4.749				3.375																				
	4.500	3 1/4"-12 x 4.500	4 1/2"-12 x 4.500	4 1/4"-12 x 4.500	4 1/4"-12 x 8.250	5.249				3.875																				
	5.000	3 1/2"-12 x 5.000	5"-12 x 5.000	4 3/4"-12 x 5.000	4 3/4"-12 x 9.000	5.749				4.250																				
	5.500	4"-12 x 5.500	5 1/2"-12 x 5.500	5 1/4"-12 x 5.500	5 1/4"-12 x 10.000	6.249				4.625																				
10.000	4.500	3 1/4"-12 x 4.500	4 1/2"-12 x 4.500	4 1/4"-12 x 4.500	4 1/4"-12 x 8.250	5.249	6.375	1.000	.500	3.875	12.625	2	-32	.500	3.688	3.688	1.094	1.656	12.125	8.500	11.750	5.291	3.775	---	7.260	---	1.125	2.937	4.750	16.281
	5.000	3 1/2"-12 x 5.000	5"-12 x 5.000	4 3/4"-12 x 5.000	4 3/4"-12 x 9.000	5.749	6.875		.500	4.250				.500											7.750			3.187	5.000	16.531
	5.500	4"-12 x 5.500	5 1/2"-12 x 5.500	5 1/4"-12 x 5.500	5 1/4"-12 x 10.000	6.249	7.375		.500	4.625				.500											8.260			3.187	5.000	16.531
	6.000	4 1/2"-12 x 6.000	6"-12 x 6.000	5 3/4"-12 x 6.000	5 3/4"-12 x 10.000	6.749	8.500		.625	5.125				.875											10.000			3.437	5.250	16.781
	7.000	5"-12 x 7.000	7"-12 x 7.000	6 1/2"-12 x 7.000	6 1/2"-12 x 10.000	7.749	9.437		.625	6.000				.875											10.500			3.437	5.250	16.781
12.000	5.500	4"-12 x 5.500	5 1/2"-12 x 5.500	5 1/4"-12 x 5.500	5 1/4"-12 x 10.000	6.249	7.375	1.000	.500	4.625	14.875	2 1/2	-32	.500	4.438	4.438	1.188	1.844	14.500	10.125	14.000	6.270	4.555	---	8.260	---	1.250	3.187	5.375	19.000
	6.000	4 1/2"-12 x 6.000	6"-12 x 6.000	5 3/4"-12 x 6.000	5 3/4"-12 x 10.000	6.749	8.500		.625	5.125				.875											10.000			3.437	5.625	19.250
	7.000	5"-12 x 7.000	7"-12 x 7.000	6 1/2"-12 x 7.000	6 1/2"-12 x 10.000	7.749	9.437		.625	6.000				.875											10.500			3.437	5.625	19.250
	8.000	5 3/4"-12 x 8.000	8"-12 x 8.000	7 1/2"-12 x 8.000	7 1/2"-12 x 12.000	8.749	10.500		.625	7.000				.875											12.000			3.437	5.625	19.250
14.000	7.000	5"-12 x 7.000	7"-12 x 7.000	6 1/2"-12 x 7.000	6 1/2"-12 x 10.000	7.749	9.437	1.000	.625	6.000	17.125	3	-32	.875	4.875	4.875	1.188	1.844	15.625	10.875	16.000	7.485	6.143	4.409	10.500	---	1.250	3.437	5.625	20.375
	8.000	5 3/4"-12 x 8.000	8"-12 x 8.000	7 1/2"-12 x 8.000	7 1/2"-12 x 12.000	8.749	10.500			7.000															12.000					
	9.000	6 1/2"-12 x 9.000	9"-12 x 9.000	8 1/2"-12 x 9.000	8 1/2"-12 x 13.500	9.749	11.500			7.875															13.000					
	10.000	7 1/4"-12 x 10.000	10"-12 x 10.000	9 1/2"-12 x 10.000	9 1/2"-12 x 15.000	10.749	12.500			8.625															14.000					
BORE	MM	KM & KF	KD	KI	KA	B	BC	C	CS	D	E	EE	ES	F	G	J	K	KN	LB	P	OD	RA	RB	RC	RD	RS	TR	WB	Y	ZB

FILE: 3.00_HP00L2.dwg REV: 02/09/2010

27650 Groesbeck Hwy Roseville, MI 48066-2759 Phone 586.775.7211 ∘ Fax 586.775.4545 Toll Free 800.526.7968 e-mail: sales@peninsularcylinders.com www.peninsularcylinders.com

FOOT SIDE LUGS

Heavy Duty Hydraulic Cylinder • 3000 P.S.I. Working Pressure • 5000 P.S.I. Rated Pressure

Peninsular Mounting Style: **HP 1**

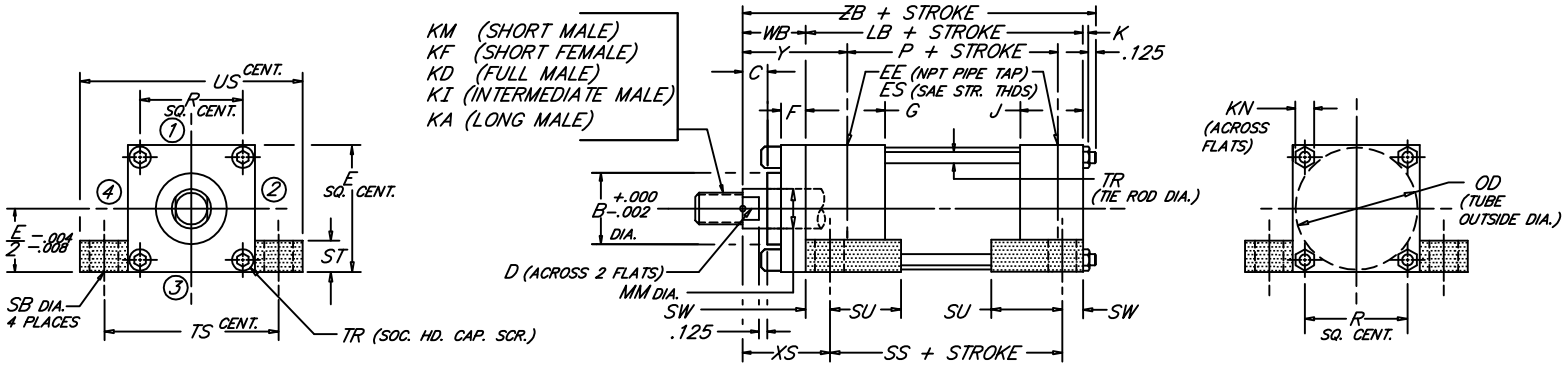

BORE	ROD MM	ROD THREAD X LENGTH KM & KF	KD	KI	KA	B	C	D	E	NPT EE	SAE ES	F	G	J	K	KN	LB	OD	P	R	SB	SS	ST	SU	SW	TR	TS	US	WB	XS	Y	ZB
1.500	.625	7/16"-20 x .750	5/8"-18 x .750	1/2"-20 x .750	1/2"-20 x 1.125	1.124	.375	.500	2.500	1/2	-8	.375	1.750	1.500	.406	.562	4.625	1.875	2.875	1.625	.438	3.875	.500	.938	.375	.375	3.250	4.000	1.000	1.375	2.000	6.156
	1.000	3/4"-16 x 1.125	1"-14 x 1.125	7/8"-14 x 1.125	7/8"-14 x 1.875	1.499	.500	.875																					1.375	1.750	2.375	6.531
2.000	1.000	3/4"-16 x 1.125	1"-14 x 1.125	7/8"-14 x 1.125	7/8"-14 x 1.875	1.499	.500	.875	3.000	1/2	-8	.625	1.750	1.500	.531	.750	4.625	2.375	2.875	2.050	.562	3.625	.750	1.250	.500	.500	4.000	5.000	1.375	1.875	2.375	6.656
	1.375	1"-14 x 1.625	1 3/8"-12 x 1.625	1 1/4"-12 x 1.625	1 1/4"-12 x 2.500	1.999	.625	1.125																					1.625	2.125	2.625	6.906
2.500	1.000	3/4"-16 x 1.125	1"-14 x 1.125	7/8"-14 x 1.125	7/8"-14 x 1.875	1.499	.500	.875	3.500	1/2	-8	.625	1.750	1.500	.531	.750	4.750	3.000	3.000	2.550	.812	3.375	1.000	1.562	.6875	.500	4.875	6.250	1.375	2.062	2.375	6.781
	1.375	1"-14 x 1.625	1 3/8"-12 x 1.625	1 1/4"-12 x 1.625	1 1/4"-12 x 2.500	1.999	.625	1.125																					1.625	2.312	2.625	7.031
	1.750	1 1/4"-12 x 2.000	1 3/4"-12 x 2.000	1 1/2"-12 x 2.000	1 1/2"-12 x 3.000	2.374	.750	1.500																					1.875	2.562	2.875	7.281
3.250	1.375	1"-14 x 1.625	1 3/8"-12 x 1.625	1 1/4"-12 x 1.625	1 1/4"-12 x 2.500	1.999	.625	1.125	4.500	3/4	-12	.750	2.000	1.750	.656	.938	5.500	3.875	3.500	3.250	.812	4.125	1.000	1.562	.6875	.625	5.875	7.250	1.625	2.312	2.750	7.906
	1.750	1 1/4"-12 x 2.000	1 3/4"-12 x 2.000	1 1/2"-12 x 2.000	1 1/2"-12 x 3.000	2.374	.750	1.500																					1.875	2.562	3.000	8.156
	2.000	1 1/2"-12 x 2.250	2"-12 x 2.250	1 3/4"-12 x 2.250	1 3/4"-12 x 3.500	2.624	.875	1.688																					2.000	2.687	3.125	8.281
4.000	1.750	1 1/4"-12 x 2.000	1 3/4"-12 x 2.000	1 1/2"-12 x 2.000	1 1/2"-12 x 3.000	2.374	.750	1.500	5.000	3/4	-12	.875	2.000	1.750	.656	.938	5.750	4.750	3.750	3.820	1.062	4.000	1.250	2.000	.875	.625	6.750	8.500	1.875	2.750	3.000	8.406
	2.000	1 1/2"-12 x 2.250	2"-12 x 2.250	1 3/4"-12 x 2.250	1 3/4"-12 x 3.500	2.624	.875	1.688																					2.000	2.875	3.125	8.531
	2.500	1 7/8"-12 x 3.000	2 1/2"-12 x 3.000	2 1/4"-12 x 3.000	2 1/4"-12 x 4.500	3.124	1.000	2.062																					2.250	3.125	3.375	8.781
5.000	2.000	1 1/2"-12 x 2.250	2"-12 x 2.250	1 3/4"-12 x 2.250	1 3/4"-12 x 3.500	2.624	.875	1.688	6.500	3/4	-12	.875	2.000	1.750	.875	1.312	6.250	6.000	4.250	4.950	1.062	4.500	1.250	2.000	.875	.875	8.250	10.000	2.000	2.875	3.125	9.250
	2.500	1 7/8"-12 x 3.000	2 1/2"-12 x 3.000	2 1/4"-12 x 3.000	2 1/4"-12 x 4.500	3.124	1.000	2.062																					2.250	3.125	3.375	9.500
	3.000	2 1/4"-12 x 3.500	3"-12 x 3.500	2 3/4"-12 x 3.500	2 3/4"-12 x 5.500	3.749	1.000	2.625																					2.250	3.125	3.375	9.500
	3.500	2 1/2"-12 x 3.500	3 1/2"-12 x 3.500	3 1/4"-12 x 3.500	3 1/4"-12 x 6.500	4.249	1.000	3.000																					2.250	3.125	3.375	9.500
6.000	2.500	1 7/8"-12 x 3.000	2 1/2"-12 x 3.000	2 1/4"-12 x 3.000	2 1/4"-12 x 4.500	3.124	1.000	2.062	7.500	1	-16	1.000	2.250	2.250	1.000	1.500	7.375	7.000	4.875	5.730	1.312	5.125	1.500	2.500	1.125	1.000	9.750	12.000	2.250	3.375	3.500	10.750
	3.000	2 1/4"-12 x 3.500	3"-12 x 3.500	2 3/4"-12 x 3.500	2 3/4"-12 x 5.500	3.749		2.625																								
	3.500	2 1/2"-12 x 3.500	3 1/2"-12 x 3.500	3 1/4"-12 x 3.500	3 1/4"-12 x 6.500	4.249		3.000																								
	4.000	3"-12 x 4.000	4"-12 x 4.000	3 3/4"-12 x 4.000	3 3/4"-12 x 7.500	4.749		3.375																								
BORE	MM	KM & KF	KD	KI	KA	B	C	D	E	EE	ES	F	G	J	K	KN	LB	OD	P	R	SB	SS	ST	SU	SW	TR	TS	US	WB	XS	Y	ZB

FILE: 3.01_HP01S2.dwg REV: 02/09/2010

27650 Groesbeck Hwy Roseville, MI 48066-2759 Phone 586.775.7211 • Fax 586.775.4545 Toll Free 800.526.7968 e-mail: sales@peninsularcylinders.com www.peninsularcylinders.com

FOOT SIDE LUGS

Heavy Duty Hydraulic Cylinder

•3000 P.S.I. Working Pressure •5000 P.S.I. Rated Pressure

Peninsular Mounting Style: **HP 1**

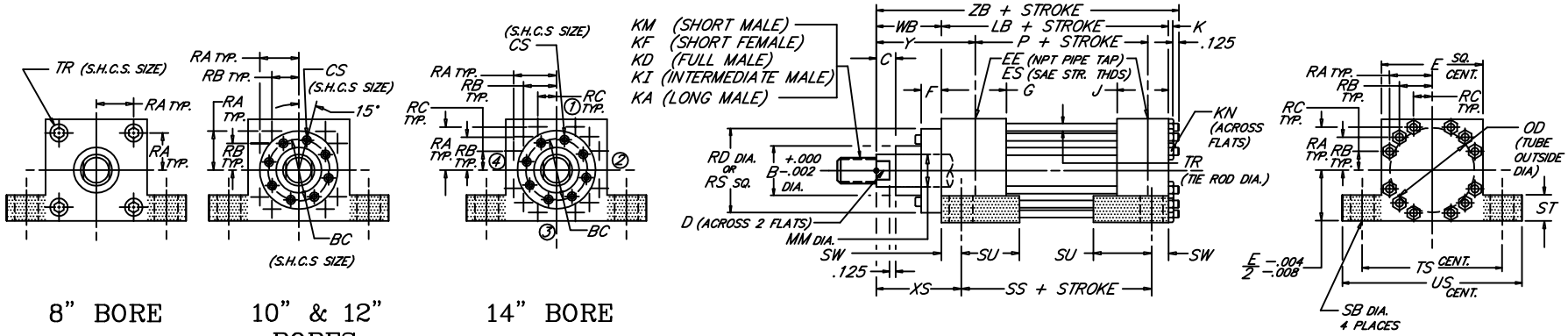

8" BORE 10" & 12" BORES 14" BORE

BORE	ROD MM	ROD THREAD X LENGTH KM & KF	KD	KI	KA	B	BC	C	CS	D	E	NPT EE	SAE ES	F	G	J	K	KN	LB	P	OD	RA	RB	RC	RD	RS	SB	SS	ST	SU	SW	TR	TS	US	WB	XS	Y	ZB
8.000	3.500	2 1/2"-12 x 3.500	3 1/2"-12 x 3.500	3 1/4"-12 x 3.500	3 1/4"-12 x 6.500	4.249				3.000																											
	4.000	3"-12 x 4.000	4"-12 x 4.000	3 3/4"-12 x 4.000	3 3/4"-12 x 7.500	4.749				3.375																											
	4.500	3 1/4"-12 x 4.500	4 1/2"-12 x 4.500	4 1/4"-12 x 4.500	4 1/4"-12 x 8.250	5.249	---	1.000	---	3.875	9.500	1 1/2	-24	1.000	3.000	3.000	1.188	1.844	9.500	6.125	9.250	3.750	---	---	---	9.500	1.562	6.750	1.750	2.875	1.375	1.250	12.250	15.000	2.250	3.625	3.938	13.063
	5.000	3 1/2"-12 x 5.000	5"-12 x 5.000	4 3/4"-12 x 5.000	4 3/4"-12 x 9.000	5.749				4.250																											
	5.500	4"-12 x 5.500	5 1/2"-12 x 5.500	5 1/4"-12 x 5.500	5 1/4"-12 x 10.000	6.249				4.625																											
10.000	4.500	3 1/4"-12 x 4.500	4 1/2"-12 x 4.500	4 1/4"-12 x 4.500	4 1/4"-12 x 8.250	5.249	6.375		.500	3.875				.500											7.260										2.937	4.562	4.750	16.281
	5.000	3 1/2"-12 x 5.000	5"-12 x 5.000	4 3/4"-12 x 5.000	4 3/4"-12 x 9.000	5.749	6.875		.500	4.250				.500											7.750										3.187	4.812	5.000	16.531
	5.500	4"-12 x 5.500	5 1/2"-12 x 5.500	5 1/4"-12 x 5.500	5 1/4"-12 x 10.000	6.249	7.375	1.000	.500	4.625	12.625	2	-32	.500	3.688	3.688	1.094	1.656	12.125	8.500	11.750	5.291	3.775	---	8.260	---	1.562	8.875	2.250	3.500	1.625	1.125	15.875	19.125	3.187	4.812	5.000	16.531
	6.000	4 1/2"-12 x 6.000	6"-12 x 6.000	5 3/4"-12 x 6.000	5 3/4"-12 x 10.000	6.749	8.500		.625	5.125				.875											10.000										3.437	5.062	5.250	16.781
	7.000	5"-12 x 7.000	7"-12 x 7.000	6 1/2"-12 x 7.000	6 1/2"-12 x 10.000	7.749	9.437		.625	6.000				.875											10.500										3.437	5.062	5.250	16.781
12.000	5.500	4"-12 x 5.500	5 1/2"-12 x 5.500	5 1/4"-12 x 5.500	5 1/4"-12 x 10.000	6.249	7.375		.500	4.625				.500											8.260										3.187	5.187	5.375	19.000
	6.000	4 1/2"-12 x 6.000	6"-12 x 6.000	5 3/4"-12 x 6.000	5 3/4"-12 x 10.000	6.749	8.500	1.000	.625	5.125	14.875	2 1/2	-32	.875	4.438	4.438	1.188	1.844	14.500	10.125	14.000	6.270	4.555	---	10.000	---	1.562	10.500	3.000	4.250	2.000	1.250	18.875	22.875	3.437	5.437	5.625	19.250
	7.000	5"-12 x 7.000	7"-12 x 7.000	6 1/2"-12 x 7.000	6 1/2"-12 x 10.000	7.749	9.437		.625	6.000				.875											10.500										3.437	5.437	5.625	19.250
	8.000	5 3/4"-12 x 8.000	8"-12 x 8.000	7 1/2"-12 x 8.000	7 1/2"-12 x 12.000	8.749	10.500		.625	7.000				.875											12.000										3.437	5.437	5.625	19.250
14.000	7.000	5"-12 x 7.000	7"-12 x 7.000	6 1/2"-12 x 7.000	6 1/2"-12 x 10.000	7.749	9.437			6.000															10.500													
	8.000	5 3/4"-12 x 8.000	8"-12 x 8.000	7 1/2"-12 x 8.000	7 1/2"-12 x 12.000	8.749	10.500	1.000	.625	7.000	17.125	3	-32	.875	4.875	4.875	1.188	1.844	15.625	10.875	16.000	7.485	6.143	4.409	12.000	---	2.312	11.125	4.000	4.750	2.250	1.250	21.625	26.125	3.437	5.687	5.625	20.375
	9.000	6 1/2"-12 x 9.000	9"-12 x 9.000	8 1/2"-12 x 9.000	8 1/2"-12 x 13.500	9.749	11.500			7.875															13.000													
	10.000	7 1/4"-12 x 10.000	10"-12 x 10.000	9 1/2"-12 x 10.000	9 1/2"-12 x 15.000	10.749	12.500			8.625															14.000													
BORE	MM	KM & KF	KD	KI	KA	B	BC	C	CS	D	E	EE	ES	F	G	J	K	KN	LB	P	OD	RA	RB	RC	RD	RS	SB	SS	ST	SU	SW	TR	TS	US	WB	XS	Y	ZB

FILE: 3.01_HP01L2.dwg REV: 02/09/2010

27650 Groesbeck Hwy Roseville, MI 48066-2759 Phone 586.775.7211 ∘ Fax 586.775.4545 Toll Free 800.526.7968 e-mail: sales@peninsularcylinders.com www.peninsularcylinders.com

HEAD TRUNNION

Heavy Duty Hydraulic Cylinder

•3000 P.S.I. Working Pressure •5000 P.S.I. Rated Pressure

Peninsular Mounting Style: **HP 2**

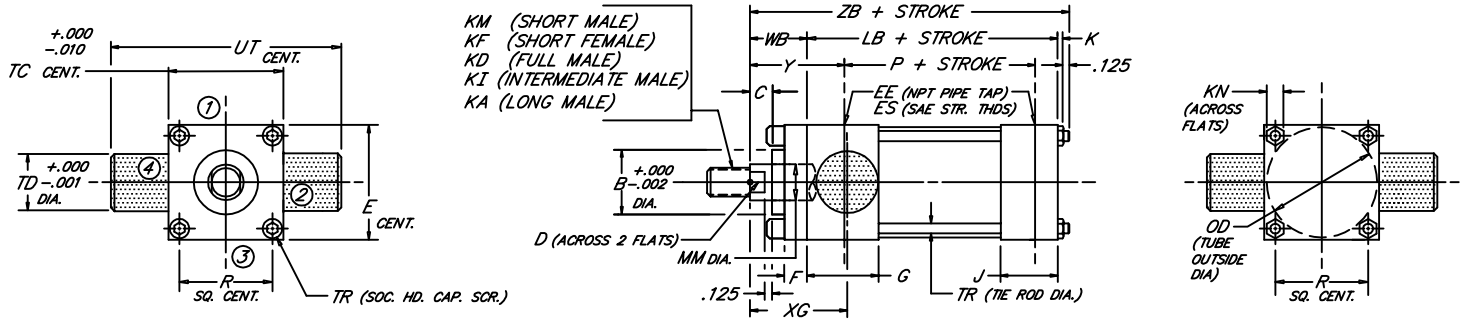

BORE	ROD MM	ROD THREAD X LENGTH KM & KF	KD	KI	KA	B	C	D	E	NPT EE	SAE ES	F	G	J	K	KN	LB	OD	P	R	TC	TD	TR	UT	WB	XG	Y	ZB
1.500	.625	7/16"-20 x .750	5/8"-18 x .750	1/2"-20 x .750	1/2"-20 x 1.125	1.124	.375	.500	2.500	1/2	-8	.375	1.750	1.500	.406	.562	4.625	1.875	2.875	1.625	2.500	1.000	.375	4.500	1.000	1.875	2.000	6.156
	1.000	3/4"-16 x 1.125	1"-14 x 1.125	7/8"-14 x 1.125	7/8"-14 x 1.875	1.499	.500	.875																	1.375	2.250	2.375	6.531
2.000	1.000	3/4"-16 x 1.125	1"-14 x 1.125	7/8"-14 x 1.125	7/8"-14 x 1.875	1.499	.500	.875	3.000	1/2	-8	.625	1.750	1.500	.531	.750	4.625	2.375	2.875	2.050	3.000	1.375	.500	5.750	1.375	2.250	2.375	6.656
	1.375	1"-14 x 1.625	1 3/8"-12 x 1.625	1 1/4"-12 x 1.625	1 1/4"-12 x 2.500	1.999	.625	1.125																	1.625	2.500	2.625	6.906
2.500	1.000	3/4"-16 x 1.125	1"-14 x 1.125	7/8"-14 x 1.125	7/8"-14 x 1.875	1.499	.500	.875	3.500	1/2	-8	.625	1.750	1.500	.531	.750	4.750	3.000	3.000	2.550	3.500	1.375	.500	6.250	1.375	2.250	2.375	6.781
	1.375	1"-14 x 1.625	1 3/8"-12 x 1.625	1 1/4"-12 x 1.625	1 1/4"-12 x 2.500	1.999	.625	1.125																	1.625	2.500	2.625	7.031
	1.750	1 1/4"-12 x 2.000	1 3/4"-12 x 2.000	1 1/2"-12 x 2.000	1 1/2"-12 x 3.000	2.374	.750	1.500																	1.875	2.750	2.875	7.281
3.250	1.375	1"-14 x 1.625	1 3/8"-12 x 1.625	1 1/4"-12 x 1.625	1 1/4"-12 x 2.500	1.999	.625	1.125	4.500	3/4	-12	.750	2.000	1.750	.656	.938	5.500	3.875	3.500	3.250	4.500	1.750	.625	8.000	1.625	2.625	2.750	7.906
	1.750	1 1/4"-12 x 2.000	1 3/4"-12 x 2.000	1 1/2"-12 x 2.000	1 1/2"-12 x 3.000	2.374	.750	1.500																	1.875	2.875	3.000	8.156
	2.000	1 1/2"-12 x 2.250	2"-12 x 2.250	1 3/4"-12 x 2.250	1 3/4"-12 x 3.500	2.624	.875	1.688																	2.000	3.000	3.125	8.281
4.000	1.750	1 1/4"-12 x 2.000	1 3/4"-12 x 2.000	1 1/2"-12 x 2.000	1 1/2"-12 x 3.000	2.374	.750	1.500	5.000	3/4	-12	.875	2.000	1.750	.656	.938	5.750	4.750	3.750	3.820	5.000	1.750	.625	8.500	1.875	2.875	3.000	8.406
	2.000	1 1/2"-12 x 2.250	2"-12 x 2.250	1 3/4"-12 x 2.250	1 3/4"-12 x 3.500	2.624	.875	1.688																	2.000	3.000	3.125	8.531
	2.500	1 7/8"-12 x 3.000	2 1/2"-12 x 3.000	2 1/4"-12 x 3.000	2 1/4"-12 x 4.500	3.124	1.000	2.062																	2.250	3.250	3.375	8.781
5.000	2.000	1 1/2"-12 x 2.250	2"-12 x 2.250	1 3/4"-12 x 2.250	1 3/4"-12 x 3.500	2.624	.875	1.688	6.500	3/4	-12	.875	2.000	1.750	.875	1.312	6.250	6.000	4.250	4.950	6.500	1.750	.875	10.000	2.000	3.000	3.125	9.250
	2.500	1 7/8"-12 x 3.000	2 1/2"-12 x 3.000	2 1/4"-12 x 3.000	2 1/4"-12 x 4.500	3.124	1.000	2.062																	2.250	3.250	3.375	9.500
	3.000	2 1/4"-12 x 3.500	3"-12 x 3.500	2 3/4"-12 x 3.500	2 3/4"-12 x 5.500	3.749	1.000	2.625																	2.250	3.250	3.375	9.500
	3.500	2 1/2"-12 x 3.500	3 1/2"-12 x 3.500	3 1/4"-12 x 3.500	3 1/4"-12 x 6.500	4.249	1.000	3.000																	2.250	3.250	3.375	9.500
6.000	2.500	1 7/8"-12 x 3.000	2 1/2"-12 x 3.000	2 1/4"-12 x 3.000	2 1/4"-12 x 4.500	3.124	1.000	2.062	7.500	1	-16	1.000	2.250	2.250	1.000	1.500	7.375	7.000	4.875	5.730	7.500	2.000	1.000	11.500	2.250	3.375	3.500	10.750
	3.000	2 1/4"-12 x 3.500	3"-12 x 3.500	2 3/4"-12 x 3.500	2 3/4"-12 x 5.500	3.749		2.625																				
	3.500	2 1/2"-12 x 3.500	3 1/2"-12 x 3.500	3 1/4"-12 x 3.500	3 1/4"-12 x 6.500	4.249		3.000																				
	4.000	3"-12 x 4.000	4"-12 x 4.000	3 3/4"-12 x 4.000	3 3/4"-12 x 7.500	4.749		3.375																				
BORE	MM	KM & KF	KD	KI	KA	B	C	D	E	EE	ES	F	G	J	K	KN	LB	OD	P	R	TC	TD	TR	UT	WB	XG	Y	ZB

FILE: 3.02_HP02S2.dwg REV: 02/09/2010

27650 Groesbeck Hwy • Roseville, MI 48066-2759 • Phone 586.775.7211 • Fax 586.775.4545 • Toll Free 800.526.7968 • e-mail: sales@peninsularcylinders.com • www.peninsularcylinders.com

HEAD TRUNNION

Heavy Duty Hydraulic Cylinder

•3000 P.S.I. Working Pressure •5000 P.S.I. Rated Pressure

Peninsular Mounting Style: **HP 2**

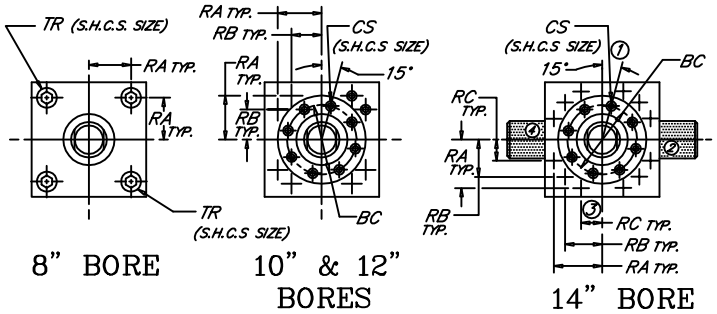

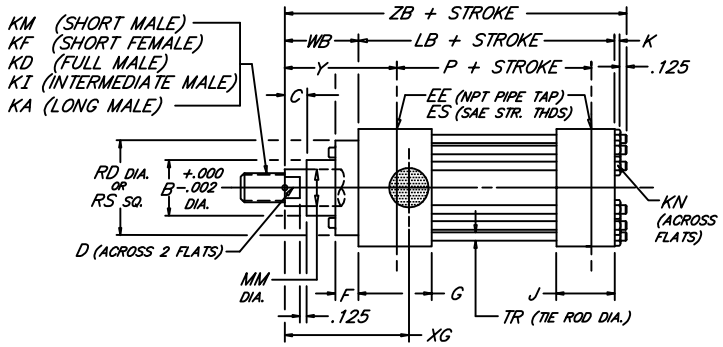

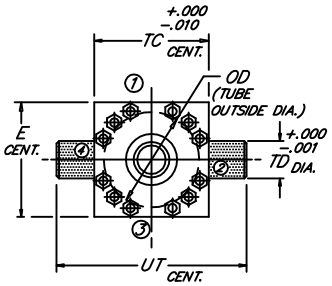

BORE	ROD MM	ROD THREAD X LENGTH KM & KF	KD	KI	KA	B	BC	C	CS	D	E	NPT EE	SAE ES	F	G	J	K	KN	LB	P	OD	RA	RB	RC	RD	RS	TC	TD	TR	UT	WB	XG	Y	ZB
	3.500	2 1/2"-12 x 3.500	3 1/2"-12 x 3.500	3 1/4"-12 x 3.500	3 1/4"-12 x 6.500	4.249				3.000																								
	4.000	3"-12 x 4.000	4"-12 x 4.000	3 3/4"-12 x 4.000	3 3/4"-12 x 7.500	4.749				3.375																								
8.000	4.500	3 1/4"-12 x 4.500	4 1/2"-12 x 4.500	4 1/4"-12 x 4.500	4 1/4"-12 x 8.250	5.249	---	1.000	---	3.875	9.500	1 1/2	-24	1.000	3.000	3.000	1.188	1.844	9.500	6.125	9.250	3.750	---	---	---	9.500	9.500	3.000	1.250	15.500	2.250	3.750	3.938	13.063
	5.000	3 1/2"-12 x 5.000	5"-12 x 5.000	4 3/4"-12 x 5.000	4 3/4"-12 x 9.000	5.749				4.250																								
	5.500	4"-12 x 5.500	5 1/2"-12 x 5.500	5 1/4"-12 x 5.500	5 1/4"-12 x 10.000	6.249				4.625																								
	4.500	3 1/4"-12 x 4.500	4 1/2"-12 x 4.500	4 1/4"-12 x 4.500	4 1/4"-12 x 8.250	5.249	6.375		.500	3.875				.500											7.260						2.937	4.781	4.750	16.281
	5.000	3 1/2"-12 x 5.000	5"-12 x 5.000	4 3/4"-12 x 5.000	4 3/4"-12 x 9.000	5.749	6.875		.500	4.250				.500											7.750						3.187	5.031	5.000	16.531
10.000	5.500	4"-12 x 5.500	5 1/2"-12 x 5.500	5 1/4"-12 x 5.500	5 1/4"-12 x 10.000	6.249	7.375	1.000	.500	4.625	12.625	2	-32	.500	3.688	3.688	1.094	1.656	12.125	8.500	11.750	5.291	3.775	---	8.260	---	12.625	3.500	1.125	19.625	3.187	5.031	5.000	16.531
	6.000	4 1/2"-12 x 6.000	6"-12 x 6.000	5 3/4"-12 x 6.000	5 3/4"-12 x 10.000	6.749	8.500		.625	5.125				.875											10.000						3.437	5.281	5.250	16.781
	7.000	5"-12 x 7.000	7"-12 x 7.000	6 1/2"-12 x 7.000	6 1/2"-12 x 10.000	7.749	9.437		.625	6.000				.875											10.500						3.437	5.281	5.250	16.781
	5.500	4"-12 x 5.500	5 1/2"-12 x 5.500	5 1/4"-12 x 5.500	5 1/4"-12 x 10.000	6.249	7.375		.500	4.625				.500											8.260						3.187	5.406	5.375	19.000
	6.000	4 1/2"-12 x 6.000	6"-12 x 6.000	5 3/4"-12 x 6.000	5 3/4"-12 x 10.000	6.749	8.500		.625	5.125				.875											10.000						3.437	5.656	5.625	19.250
12.000	7.000	5"-12 x 7.000	7"-12 x 7.000	6 1/2"-12 x 7.000	6 1/2"-12 x 10.000	7.749	9.437	1.000	.625	6.000	14.875	2 1/2	-32	.875	4.438	4.438	1.188	1.844	14.500	10.125	14.000	6.270	4.555	---	10.500	---	14.875	4.000	1.250	22.875	3.437	5.656	5.625	19.250
	8.000	5 3/4"-12 x 8.000	8"-12 x 8.000	7 1/2"-12 x 8.000	7 1/2"-12 x 12.000	8.749	10.500		.625	7.000				.875											12.000						3.437	5.656	5.625	19.250
	7.000	5"-12 x 7.000	7"-12 x 7.000	6 1/2"-12 x 7.000	6 1/2"-12 x 10.000	7.749	9.437			6.000															10.500									
14.000	8.000	5 3/4"-12 x 8.000	8"-12 x 8.000	7 1/2"-12 x 8.000	7 1/2"-12 x 12.000	8.749	10.500	1.000	.625	7.000	17.125	3	-32	.875	4.875	4.875	1.188	1.844	15.625	10.875	16.000	7.485	6.143	4.409	12.000	---	17.125	4.500	1.250	26.125	3.437	5.875	5.625	20.375
	9.000	6 1/2"-12 x 9.000	9"-12 x 9.000	8 1/2"-12 x 9.000	8 1/2"-12 x 13.500	9.749	11.500			7.875															13.000									
	10.000	7 1/4"-12 x 10.000	10"-12 x 10.000	9 1/2"-12 x 10.000	9 1/2"-12 x 15.000	10.749	12.500			8.625															14.000									
BORE	MM	KM & KF	KD	KI	KA	B	BC	C	CS	D	E	EE	ES	F	G	J	K	KN	LB	P	OD	RA	RB	RC	RD	RS	TC	TD	TR	UT	WB	XG	Y	ZB

FILE: 3.02_HP02L2.dwg REV: 02/09/2010

27650 Groesbeck Hwy Roseville, MI 48066-2759 Phone 586.775.7211 ∘ Fax 586.775.4545 Toll Free 800.526.7968 e-mail: sales@peninsularcylinders.com www.peninsularcylinders.com

CAP FIXED CLEVIS

Heavy Duty Hydraulic Cylinder • 3000 P.S.I. Working Pressure • 5000 P.S.I. Rated Pressure

Peninsular Mounting Style: **HP 3**

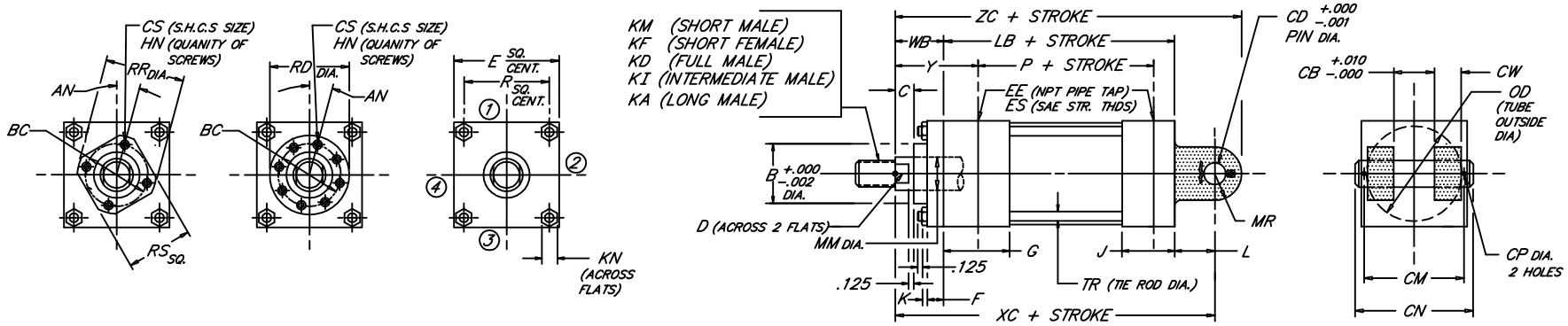

BORE	ROD MM	ROD THREAD X LENGTH KM & KF	KD	KI	KA	AN	B	BC	C	CB	CD	CS	CN	CM	CP	CW	D	E	NPT EE	SAE ES	F	G	HN	J	K	KN	L	LB	MR	OD	P	R	RD	RR	RS	TR	WB	XC	Y	ZC
1.500	.625	7/16"-20 x .750	5/8"-18 x .750	1/2"-20 x .750	1/2"-20 x 1.125	15°	1.124	1.750	.375	.765	.500	.250	2.281	1.938	.106	.500	.500	2.500	1/2	-8	.250	1.750	4	1.500	.406	.562	.750	4.625	.500	1.875	2.875	1.625	---	2.125	1.625	.375	1.000	6.375	2.000	6.875
	1.000	3/4"-16 x 1.125	1"-14 x 1.125	7/8"-14 x 1.125	7/8"-14 x 1.875	---	1.499	---	.500			---					.875				.375		---										---	---	---		1.375	6.750	2.375	7.250
2.000	1.000	3/4"-16 x 1.125	1"-14 x 1.125	7/8"-14 x 1.125	7/8"-14 x 1.875	15°	1.499	2.188	.500	1.265	.750	.312	3.094	2.719	.140	.625	.875	3.000	1/2	-8	.375	1.750	4	1.500	.531	.750	1.250	4.625	.750	2.375	2.875	2.050	---	2.656	2.000	.500	1.375	7.250	2.375	8.000
	1.375	1"-14 x 1.625	1 3/8"-12 x 1.625	1 1/4"-12 x 1.625	1 1/4"-12 x 2.500	---	1.999	---	.625			---					1.125				.625		---										---	---	---		1.625	7.500	2.625	8.250
2.500	1.000	3/4"-16 x 1.125	1"-14 x 1.125	7/8"-14 x 1.125	7/8"-14 x 1.875	15°	1.499	2.188	.500			.312					.875				.375		4										---	2.656	2.000		1.375	7.375	2.375	8.125
	1.375	1"-14 x 1.625	1 3/8"-12 x 1.625	1 1/4"-12 x 1.625	1 1/4"-12 x 2.500	15°	1.999	2.750	.625	1.265	.750	.375	3.094	2.719	.140	.625	1.125	3.500	1/2	-8	.375	1.750	4	1.500	.531	.750	1.250	4.750	.750	3.000	3.000	2.550	---	3.320	2.500	.500	1.625	7.625	2.625	8.375
	1.750	1 1/4"-12 x 2.000	1 3/4"-12 x 2.000	1 1/2"-12 x 2.000	1 1/2"-12 x 3.000	---	2.374	---	.750			---					1.500				.625		---										---	---	---		1.875	7.875	2.875	8.625
3.250	1.375	1"-14 x 1.625	1 3/8"-12 x 1.625	1 1/4"-12 x 1.625	1 1/4"-12 x 2.500	15°	1.999	2.750	.625			.375					1.125				.375		4										---	3.320	2.500		1.625	8.625	2.750	9.625
	1.750	1 1/4"-12 x 2.000	1 3/4"-12 x 2.000	1 1/2"-12 x 2.000	1 1/2"-12 x 3.000	15°	2.374	3.125	.750	1.515	1.000	.375	3.594	3.219	.140	.750	1.500	4.500	3/4	-12	.375	2.000	4	1.750	.656	.938	1.500	5.500	1.000	3.875	3.500	3.250	---	3.760	2.760	.625	1.875	8.875	3.000	9.875
	2.000	1 1/2"-12 x 2.250	2"-12 x 2.250	1 3/4"-12 x 2.250	1 3/4"-12 x 3.500	---	2.624	---	.875			---					1.688				.750		---										---	---	---		2.000	9.000	3.125	10.000
4.000	1.750	1 1/4"-12 x 2.000	1 3/4"-12 x 2.000	1 1/2"-12 x 2.000	1 1/2"-12 x 3.000	15°	2.374	3.125	.750			.375					1.500				.375		4										---	3.760	2.760		1.875	9.750	3.000	11.125
	2.000	1 1/2"-12 x 2.250	2"-12 x 2.250	1 3/4"-12 x 2.250	1 3/4"-12 x 3.500	30°	2.624	3.500	.875	2.015	1.375	.375	4.656	4.250	.173	1.000	1.688	5.000	3/4	-12	.375	2.000	6	1.750	.656	.938	2.125	5.750	1.375	4.750	3.750	3.820	4.260	---	---	.625	2.000	9.875	3.125	11.250
	2.500	1 7/8"-12 x 3.000	2 1/2"-12 x 3.000	2 1/4"-12 x 3.000	2 1/4"-12 x 4.500	---	3.124	---	1.000			---					2.062				.875		---										----	---	---		2.250	10.125	3.375	11.500
5.000	2.000	1 1/2"-12 x 2.250	2"-12 x 2.250	1 3/4"-12 x 2.250	1 3/4"-12 x 3.500	15°	2.624	3.500	.875			.375					1.688				.375		6										4.260	---	---		2.000	10.500	3.125	12.250
	2.500	1 7/8"-12 x 3.000	2 1/2"-12 x 3.000	2 1/4"-12 x 3.000	2 1/4"-12 x 4.500	15°	3.124	4.000	1.000	2.515	1.750	.375	5.656	5.250	.173	1.250	2.062	6.500	3/4	-12	.375	2.000	6	1.750	.875	1.312	2.250	6.250	1.750	6.000	4.250	4.950	4.625	---	---	.875	2.250	10.750	3.375	12.500
	3.000	2 1/4"-12 x 3.500	3"-12 x 3.500	2 3/4"-12 x 3.500	2 3/4"-12 x 5.500	15°	3.749	4.500	1.000			.375					2.625				.375		6										5.125	---	---		2.250	10.750	3.375	12.500
	3.500	2 1/2"-12 x 3.500	3 1/2"-12 x 3.500	3 1/4"-12 x 3.500	3 1/4"-12 x 6.500	---	4.249	---	1.000			---					3.000				.875		---										---	---	---		2.250	10.750	3.375	12.500
6.000	2.500	1 7/8"-12 x 3.000	2 1/2"-12 x 3.000	2 1/4"-12 x 3.000	2 1/4"-12 x 4.500	15°	3.124	4.000	1.000	2.515	2.000	.375	5.719	5.281	.204	1.250	2.062	7.500	1	-16	.375	2.250	6	2.250	1.000	1.500	2.500	7.375	2.000	7.000	4.875	5.730	4.625	---	---	1.000	2.250	12.125	3.500	14.125
	3.000	2 1/4"-12 x 3.500	3"-12 x 3.500	2 3/4"-12 x 3.500	2 3/4"-12 x 5.500		3.749	4.500				.375					2.625				.375		6										5.125	---	---					
	3.500	2 1/2"-12 x 3.500	3 1/2"-12 x 3.500	3 1/4"-12 x 3.500	3 1/4"-12 x 6.500		4.249	5.000				.375					3.000				.375		8										5.562	---	---					
	4.000	3"-12 x 4.000	4"-12 x 4.000	3 3/4"-12 x 4.000	3 3/4"-12 x 7.500		4.749	5.625				.438					3.375				.500		8										6.500	---	---					
BORE	MM	KM & KF	KD	KI	KA	AN	B	BC	C	CB	CD	CS	CN	CM	CP	CW	D	E	EE	ES	F	G	HN	J	K	KN	L	LB	MR	OD	P	R	RD	RR	RS	TR	WB	XC	Y	ZC

3.00

NEVA DESIGN

FILE: HP03S2.dwg REV: 02/09/2010

27650 Groesbeck Hwy • Roseville, MI 48066-2759 • Phone 586.775.7211 • Fax 586.775.4545 • Toll Free 800.526.7968 • e-mail: sales@peninsularcylinders.com • www.peninsularcylinders.com

CAP FIXED CLEVIS

Peninsular Mounting Style: **HP 3**

Heavy Duty Hydraulic Cylinder • 3000 P.S.I. Working Pressure • 5000 P.S.I. Rated Pressure

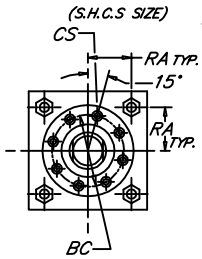

8" BORE

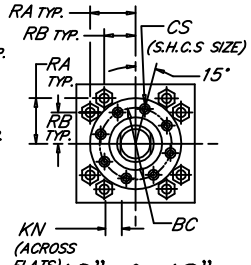

10" & 12" BORES

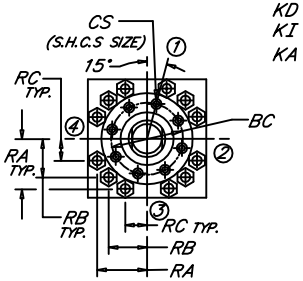

14" BORE

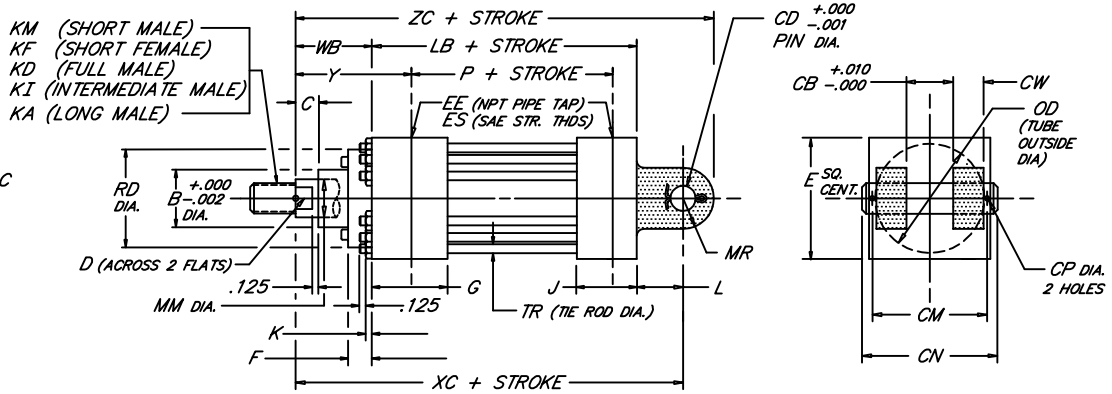

BORE	ROD MM	ROD THREAD X LENGTH KM & KF	KD	KI	KA	B	BC	C	CB	CD	CN	CM	CP	CS	CW	D	E	NPT EE	SAE ES	F	G	J	K	KN	L	LB	MR	P	OD	RA	RB	RC	RD	TR	WB	XC	Y	ZC
8.000	3.500	2 1/2"-12 x 3.500	3 1/2"-12 x 3.500	3 1/4"-12 x 3.500	3 1/4"-12 x 6.500	4.249	5.000							.375		3.000				.375																		
	4.000	3"-12 x 4.000	4"-12 x 4.000	3 3/4"-12 x 4.000	3 3/4"-12 x 7.500	4.749	5.625							.438		3.375				.500																		
	4.500	3 1/4"-12 x 4.500	4 1/2"-12 x 4.500	4 1/4"-12 x 4.500	4 1/4"-12 x 8.250	5.249	6.375	1.000	3.015	3.000	6.844	6.344	.250	.500	1.500	3.875	9.500	1 1/2	-24	.500	3.000	3.000	1.188	1.844	3.250	9.500	2.750	6.125	9.250	3.750	---	---	7.260	1.250	2.250	15.000	3.938	17.750
	5.000	3 1/2"-12 x 5.000	5"-12 x 5.000	4 3/4"-12 x 5.000	4 3/4"-12 x 9.000	5.749	6.875							.500		4.250				.500													7.750					
	5.500	4"-12 x 5.500	5 1/2"-12 x 5.500	5 1/4"-12 x 5.500	5 1/4"-12 x 10.000	6.249	7.375							.500		4.625				.500													8.260					
10.000	4.500	3 1/4"-12 x 4.500	4 1/2"-12 x 4.500	4 1/4"-12 x 4.500	4 1/4"-12 x 8.250	5.249	6.375							.500		3.875				.500													7.260		2.937	19.062	4.750	22.562
	5.000	3 1/2"-12 x 5.000	5"-12 x 5.000	4 3/4"-12 x 5.000	4 3/4"-12 x 9.000	5.749	6.875							.500		4.250				.500													7.750		3.187	19.312	5.000	22.812
	5.500	4"-12 x 5.500	5 1/2"-12 x 5.500	5 1/4"-12 x 5.500	5 1/4"-12 x 10.000	6.249	7.375	1.000	4.015	3.500	8.969	8.406	.312	.500	2.000	4.625	12.625	2	-32	.500	3.688	3.688	1.094	1.656	4.000	12.125	3.500	8.500	11.750	5.291	3.775	---	8.260	1.125	3.187	19.312	5.000	22.812
	6.000	4 1/2"-12 x 6.000	6"-12 x 6.000	5 3/4"-12 x 6.000	5 3/4"-12 x 10.000	6.749	8.500							.625		5.125				.875													10.000		3.437	19.562	5.250	23.062
	7.000	5"-12 x 7.000	7"-12 x 7.000	6 1/2"-12 x 7.000	6 1/2"-12 x 10.000	7.749	9.437							.625		6.000				.875													10.500		3.437	19.562	5.250	23.062
12.000	5.500	4"-12 x 5.500	5 1/2"-12 x 5.500	5 1/4"-12 x 5.500	5 1/4"-12 x 10.000	6.249	7.375							.500		4.625				.500													8.260		3.187	22.187	5.375	26.187
	6.000	4 1/2"-12 x 6.000	6"-12 x 6.000	5 3/4"-12 x 6.000	5 3/4"-12 x 10.000	6.749	8.500	1.000	4.515	4.000	9.969	9.406	.312	.625	2.250	5.125	14.875	2 1/2	-32	.875	4.438	4.438	1.188	1.844	4.500	14.500	4.000	10.125	14.000	6.270	4.555	---	10.000	1.250	3.437	22.437	5.625	26.437
	7.000	5"-12 x 7.000	7"-12 x 7.000	6 1/2"-12 x 7.000	6 1/2"-12 x 10.000	7.749	9.437							.625		6.000				.875													10.500		3.437	22.437	5.625	26.437
	8.000	5 3/4"-12 x 8.000	8"-12 x 8.000	7 1/2"-12 x 8.000	7 1/2"-12 x 12.000	8.749	10.500							.625		7.000				.875													12.000		3.437	22.437	5.625	26.437
14.000	7.000	5"-12 x 7.000	7"-12 x 7.000	6 1/2"-12 x 7.000	6 1/2"-12 x 10.000	7.749	9.437									6.000																	10.500					
	8.000	5 3/4"-12 x 8.000	8"-12 x 8.000	7 1/2"-12 x 8.000	7 1/2"-12 x 12.000	8.749	10.500	1.000	6.015	5.000	12.969	12.406	.312	.625	3.000	7.000	17.125	3	-32	.875	4.875	4.875	1.188	1.844	5.750	15.625	5.000	10.875	16.000	7.485	6.143	4.409	12.000	1.250	3.437	24.812	5.625	29.812
	9.000	6 1/2"-12 x 9.000	9"-12 x 9.000	8 1/2"-12 x 9.000	8 1/2"-12 x 13.500	9.749	11.500									7.875																	13.000					
	10.000	7 1/4"-12 x 10.000	10"-12 x 10.000	9 1/2"-12 x 10.000	9 1/2"-12 x 15.000	10.749	12.500									8.625																	14.000					
BORE	MM	KM & KF	KD	KI	KA	B	BC	C	CB	CD	CN	CM	CP	CS	CW	D	E	EE	ES	F	G	J	K	KN	L	LB	MR	P	OD	RA	RB	RC	RD	TR	WB	XC	Y	ZC

NEVA DESIGN

FILE: 3.03_HP03L2.dwg REV: 02/09/2010

27650 Groesbeck Hwy • Roseville, MI 48066-2759 • Phone 586.775.7211 • Fax 586.775.4545 • Toll Free 800.526.7968 • e-mail: sales@peninsularcylinders.com • www.peninsularcylinders.com

HEAD RECTANGULAR FLANGE

Heavy Duty Hydraulic Cylinder

Peninsular Mounting Style: **HP 4**

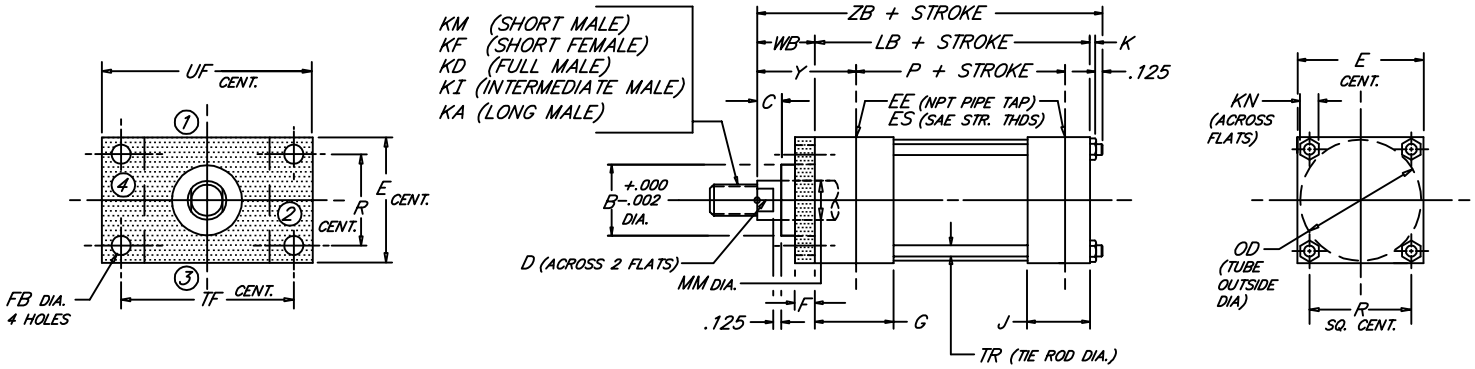

BORE	ROD MM	ROD THREAD X LENGTH KM & KF	KD	KI	KA	MAXIMUM PRESSURE	B	C	D	E	NPT EE	SAE ES	F	FB	G	J	K	KN	LB	OD	P	R	TF	TR	UF	WB	Y	ZB
1.500	.625	7/16"-20 x .750	5/8"-18 x .750	1/2"-20 x .750	1/2"-20 x 1.125	2500 P.S.I.	1.124	.375	.500	2.500	1/2	-8	.375	.437	1.750	1.500	.406	.562	4.625	1.875	2.875	1.625	3.438	.375	4.250	1.000	2.000	6.156
	1.000	3/4"-16 x 1.125	1"-14 x 1.125	7/8"-14 x 1.125	7/8"-14 x 1.875	1500 P.S.I.	1.499	.500	.875																	1.375	2.375	6.531
2.000	1.000	3/4"-16 x 1.125	1"-14 x 1.125	7/8"-14 x 1.125	7/8"-14 x 1.875	2500 P.S.I.	1.499	.500	.875	3.000	1/2	-8	.625	.562	1.750	1.500	.531	.750	4.625	2.375	2.875	2.050	4.125	.500	5.125	1.375	2.375	6.656
	1.375	1"-14 x 1.625	1 3/8"-12 x 1.625	1 1/4"-12 x 1.625	1 1/4"-12 x 2.500	1500 P.S.I.	1.999	.625	1.125																	1.625	2.625	6.906
2.500	1.000	3/4"-16 x 1.125	1"-14 x 1.125	7/8"-14 x 1.125	7/8"-14 x 1.875	2500 P.S.I.	1.499	.500	.875	3.500	1/2	-8	.625	.562	1.750	1.500	.531	.750	4.750	3.000	3.000	2.550	4.625	.500	5.625	1.375	2.375	6.781
	1.375	1"-14 x 1.625	1 3/8"-12 x 1.625	1 1/4"-12 x 1.625	1 1/4"-12 x 2.500	1900 P.S.I.	1.999	.625	1.125																	1.625	2.625	7.031
	1.750	1 1/4"-12 x 2.000	1 3/4"-12 x 2.000	1 1/2"-12 x 2.000	1 1/2"-12 x 3.000	1500 P.S.I.	2.374	.750	1.500																	1.875	2.875	7.281
3.250	1.375	1"-14 x 1.625	1 3/8"-12 x 1.625	1 1/4"-12 x 1.625	1 1/4"-12 x 2.500	2500 P.S.I.	1.999	.625	1.125	4.500	3/4	-12	.750	.687	2.000	1.750	.656	.938	5.500	3.875	3.500	3.250	5.875	.625	7.125	1.625	2.750	7.906
	1.750	1 1/4"-12 x 2.000	1 3/4"-12 x 2.000	1 1/2"-12 x 2.000	1 1/2"-12 x 3.000	2100 P.S.I.	2.374	.750	1.500																	1.875	3.000	8.156
	2.000	1 1/2"-12 x 2.250	2"-12 x 2.250	1 3/4"-12 x 2.250	1 3/4"-12 x 3.500	1500 P.S.I.	2.624	.875	1.688																	2.000	3.125	8.281
4.000	1.750	1 1/4"-12 x 2.000	1 3/4"-12 x 2.000	1 1/2"-12 x 2.000	1 1/2"-12 x 3.000	2500 P.S.I.	2.374	.750	1.500	5.000	3/4	-12	.875	.687	2.000	1.750	.656	.938	5.750	4.750	3.750	3.820	6.375	.625	7.625	1.875	3.000	8.406
	2.000	1 1/2"-12 x 2.250	2"-12 x 2.250	1 3/4"-12 x 2.250	1 3/4"-12 x 3.500	1800 P.S.I.	2.624	.875	1.688																	2.000	3.125	8.531
	2.500	1 7/8"-12 x 3.000	2 1/2"-12 x 3.000	2 1/4"-12 x 3.000	2 1/4"-12 x 4.500	1500 P.S.I.	3.124	1.000	2.062																	2.250	3.375	8.781
5.000	2.000	1 1/2"-12 x 2.250	2"-12 x 2.250	1 3/4"-12 x 2.250	1 3/4"-12 x 3.500	2200 P.S.I.	2.624	.875	1.688	6.500	3/4	-12	.875	.937	2.000	1.750	.875	1.312	6.250	6.000	4.250	4.950	8.188	.875	9.750	2.000	3.125	9.250
	2.500	1 7/8"-12 x 3.000	2 1/2"-12 x 3.000	2 1/4"-12 x 3.000	2 1/4"-12 x 4.500	1650 P.S.I.	3.124	1.000	2.062																	2.250	3.375	9.500
	3.000	2 1/4"-12 x 3.500	3"-12 x 3.500	2 3/4"-12 x 3.500	2 3/4"-12 x 5.500	1200 P.S.I.	3.749	1.000	2.625																	2.250	3.375	9.500
	3.500	2 1/2"-12 x 3.500	3 1/2"-12 x 3.500	3 1/4"-12 x 3.500	3 1/4"-12 x 6.500	750 P.S.I.	4.249	1.000	3.000																	2.250	3.375	9.500
6.000	2.500	1 7/8"-12 x 3.000	2 1/2"-12 x 3.000	2 1/4"-12 x 3.000	2 1/4"-12 x 4.500	1800 P.S.I.	3.124	1.000	2.062	7.500	1	-16	1.000	1.062	2.250	2.250	1.000	1.500	7.375	7.000	4.875	5.730	9.438	1.000	11.250	2.250	3.500	10.750
	3.000	2 1/4"-12 x 3.500	3"-12 x 3.500	2 3/4"-12 x 3.500	2 3/4"-12 x 5.500	1450 P.S.I.	3.749		2.625																			
	3.500	2 1/2"-12 x 3.500	3 1/2"-12 x 3.500	3 1/4"-12 x 3.500	3 1/4"-12 x 6.500	1100 P.S.I.	4.249		3.000																			
	4.000	3"-12 x 4.000	4"-12 x 4.000	3 3/4"-12 x 4.000	3 3/4"-12 x 7.500	750 P.S.I.	4.749		3.375																			
BORE	MM	KM & KF	KD	KI	KA	MAX. P.S.I.	B	C	D	E	EE	ES	F	FB	G	J	K	KN	LB	OD	P	R	TF	TR	UF	WB	Y	ZB

FILE: 3.04_HP04S2.dwg REV: 02/09/2010

27650 Groesbeck Hwy Roseville, MI 48066-2759 Phone 586.775.7211 ∘ Fax 586.775.4545 Toll Free 800.526.7968 e-mail: sales@peninsularcylinders.com www.peninsularcylinders.com

CAP RECTANGULAR FLANGE

Heavy Duty Hydraulic Cylinder

Peninsular Mounting Style: **HP 5**

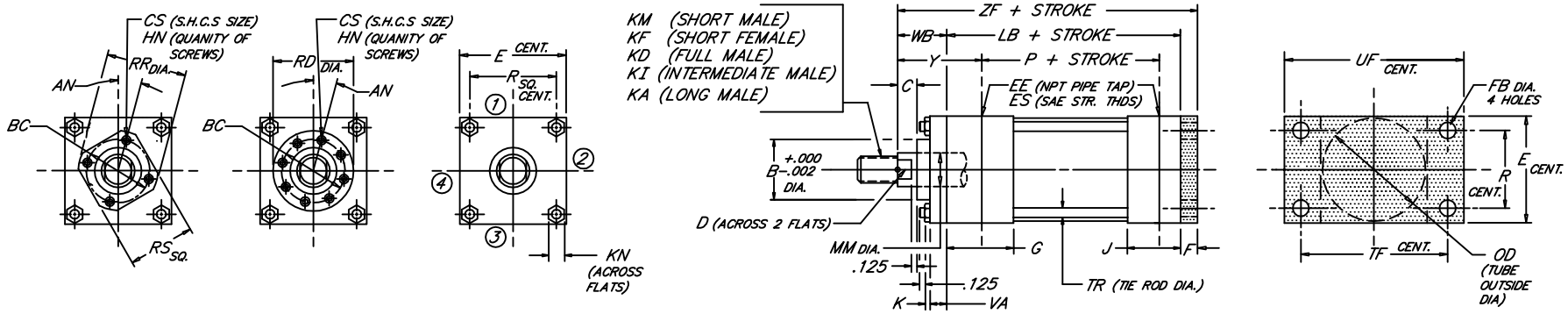

BORE	ROD MM	ROD THREAD X LENGTH KM & KF	KD	KI	KA	MAXIMUM PRESSURE	AN	B	BC	C	CS	D	E	NPT EE	SAE ES	F	FB	G	HN	J	K	KN	LB	OD	P	R	RD	RR	RS	TF	TR	UF	VA	WB	Y	ZF
1.500	.625	7/16"-20 x .750	5/8"-18 x .750	1/2"-20 x .750	1/2"-20 x 1.125	2500 P.S.I.	15°	1.124	1.750	.375	.250	.500	2.500	1/2	-8	.375	.437	1.750	4	1.500	.406	.562	4.625	1.875	2.875	1.625	---	2.125	1.625	3.438	.375	4.250	.250	1.000	2.000	6.000
	1.000	3/4"-16 x 1.125	1"-14 x 1.125	7/8"-14 x 1.125	7/8"-14 x 1.875	2500 P.S.I.	---	1.499	---	.500	---	.875							---								---	---	---				.375	1.375	2.375	6.375
2.000	1.000	3/4"-16 x 1.125	1"-14 x 1.125	7/8"-14 x 1.125	7/8"-14 x 1.875	2500 P.S.I.	15°	1.499	2.188	.500	.312	.875	3.000	1/2	-8	.625	.562	1.750	4	1.500	.531	.750	4.625	2.375	2.875	2.050	---	2.656	2.000	4.125	.500	5.125	.375	1.375	2.375	6.625
	1.375	1"-14 x 1.625	1 3/8"-12 x 1.625	1 1/4"-12 x 1.625	1 1/4"-12 x 2.500	2200 P.S.I.	---	1.999	---	.625	---	1.125							---								---	---	---				.625	1.625	2.625	6.875
2.500	1.000	3/4"-16 x 1.125	1"-14 x 1.125	7/8"-14 x 1.125	7/8"-14 x 1.875	2500 P.S.I.	15°	1.499	2.188	.500	.312	.875	3.500	1/2	-8	.625	.562	1.750	4	1.500	.531	.750	4.750	3.000	3.000	2.550	---	2.656	2.000	4.625	.500	5.625	.375	1.375	2.375	6.750
	1.375	1"-14 x 1.625	1 3/8"-12 x 1.625	1 1/4"-12 x 1.625	1 1/4"-12 x 2.500	2500 P.S.I.	15°	1.999	2.750	.625	.375	1.125							4								---	3.320	2.500				.375	1.625	2.625	7.000
	1.750	1 1/4"-12 x 2.000	1 3/4"-12 x 2.000	1 1/2"-12 x 2.000	1 1/2"-12 x 3.000	2200 P.S.I.	---	2.374	---	.750	---	1.500							---								---	---	---				.625	1.875	2.875	7.250
3.250	1.375	1"-14 x 1.625	1 3/8"-12 x 1.625	1 1/4"-12 x 1.625	1 1/4"-12 x 2.500	2500 P.S.I.	15°	1.999	2.750	.625	.375	1.125	4.500	3/4	-12	.750	.687	2.000	4	1.750	.656	.938	5.500	3.875	3.500	3.250	---	3.320	2.500	5.875	.625	7.125	.375	1.625	2.750	7.875
	1.750	1 1/4"-12 x 2.000	1 3/4"-12 x 2.000	1 1/2"-12 x 2.000	1 1/2"-12 x 3.000	2200 P.S.I.	15°	2.374	3.125	.750	.375	1.500							4								---	3.760	2.760				.375	1.875	3.000	8.125
	2.000	1 1/2"-12 x 2.250	2"-12 x 2.250	1 3/4"-12 x 2.250	1 3/4"-12 x 3.500	2000 P.S.I.	---	2.624	---	.875	---	1.688							---								---	---	---				.750	2.000	3.125	8.250
4.000	1.750	1 1/4"-12 x 2.000	1 3/4"-12 x 2.000	1 1/2"-12 x 2.000	1 1/2"-12 x 3.000	2000 P.S.I.	15°	2.374	3.125	.750	.375	1.500	5.000	3/4	-12	.875	.687	2.000	4	1.750	.656	.938	5.750	4.750	3.750	3.820	---	3.760	2.760	6.375	.625	7.625	.375	1.875	3.000	8.500
	2.000	1 1/2"-12 x 2.250	2"-12 x 2.250	1 3/4"-12 x 2.250	1 3/4"-12 x 3.500	2000 P.S.I.	30°	2.624	3.500	.875	.375	1.688							6								4.260	---	---				.375	2.000	3.125	8.625
	2.500	1 7/8"-12 x 3.000	2 1/2"-12 x 3.000	2 1/4"-12 x 3.000	2 1/4"-12 x 4.500	1800 P.S.I.	---	3.124	---	1.000	---	2.062							---								----	---	---				.875	2.250	3.375	8.875
5.000	2.000	1 1/2"-12 x 2.250	2"-12 x 2.250	1 3/4"-12 x 2.250	1 3/4"-12 x 3.500	2200 P.S.I.	15°	2.624	3.500	.875	.375	1.688	6.500	3/4	-12	.875	.937	2.000	6	1.750	.875	1.312	6.250	6.000	4.250	4.950	4.260	---	---	8.188	.875	9.750	.375	2.000	3.125	9.125
	2.500	1 7/8"-12 x 3.000	2 1/2"-12 x 3.000	2 1/4"-12 x 3.000	2 1/4"-12 x 4.500	2000 P.S.I.	15°	3.124	4.000	1.000	.375	2.062							6								4.625	---	---				.375	2.250	3.375	9.375
	3.000	2 1/4"-12 x 3.500	3"-12 x 3.500	2 3/4"-12 x 3.500	2 3/4"-12 x 5.500	2000 P.S.I.	15°	3.749	4.500	1.000	.375	2.625							6								5.125	---	---				.375	2.250	3.375	9.375
	3.500	2 1/2"-12 x 3.500	3 1/2"-12 x 3.500	3 1/4"-12 x 3.500	3 1/4"-12 x 6.500	1800 P.S.I.	---	4.249	---	1.000	---	3.000							---								---	---	---				.875	2.250	3.375	9.375
6.000	2.500	1 7/8"-12 x 3.000	2 1/2"-12 x 3.000	2 1/4"-12 x 3.000	2 1/4"-12 x 4.500	2200 P.S.I.	15°	3.124	4.000	1.000	.375	2.062	7.500	1	-16	1.000	1.062	2.250	6	2.250	1.000	1.500	7.375	7.000	4.875	5.730	4.625	---	---	9.438	1.000	11.250	.375	2.250	3.500	10.625
	3.000	2 1/4"-12 x 3.500	3"-12 x 3.500	2 3/4"-12 x 3.500	2 3/4"-12 x 5.500	2000 P.S.I.		3.749	4.500		.375	2.625							6								5.125	---	---				.375			
	3.500	2 1/2"-12 x 3.500	3 1/2"-12 x 3.500	3 1/4"-12 x 3.500	3 1/4"-12 x 6.500	2000 P.S.I.		4.249	5.000		.375	3.000							8								5.562	---	---				.375			
	4.000	3"-12 x 4.000	4"-12 x 4.000	3 3/4"-12 x 4.000	3 3/4"-12 x 7.500	2000 P.S.I.		4.749	5.625		.438	3.375							8								6.500	---	---				.500			
BORE	MM	KM & KF	KD	KI	KA	MAX. P.S.I.	AN	B	BC	C	CS	D	E	EE	ES	F	FB	G	HN	J	K	KN	LB	OD	P	R	RD	RR	RS	TF	TR	UF	VA	WB	Y	ZF

FILE: 3.05_HP05SB.dwg REV: 02/09/2010

27650 Groesbeck Hwy Roseville, MI 48066-2759 Phone 586.775.7211 • Fax 586.775.4545 Toll Free 800.526.7968 e-mail: sales@peninsularcylinders.com www.peninsularcylinders.com

INTERMEDIATE TRUNNION

Peninsular Mounting Style: **HP 6**

Heavy Duty Hydraulic Cylinder • 3000 P.S.I. Working Pressure • 5000 P.S.I. Rated Pressure

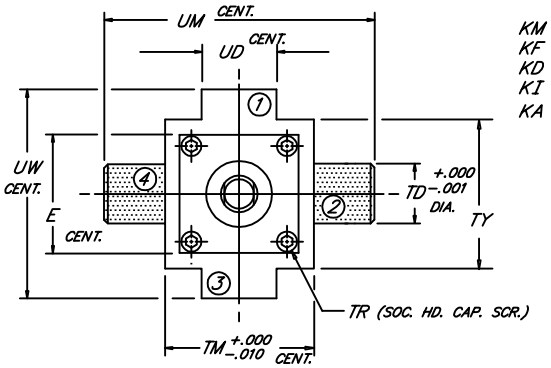

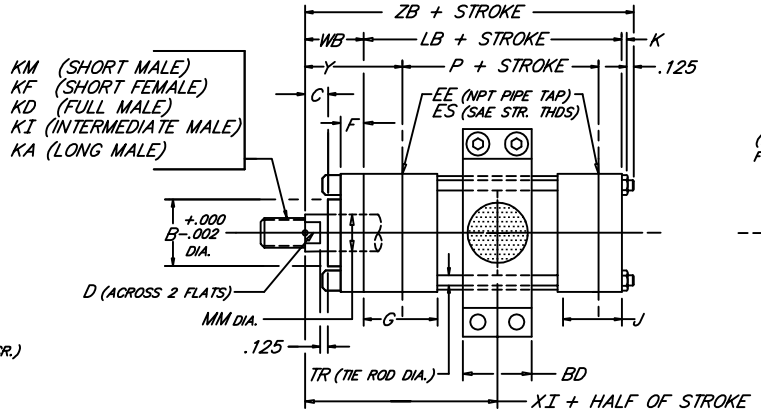

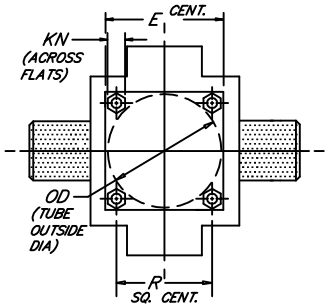

BORE	ROD MM	ROD THREAD X LENGTH KM & KF	KD	KI	KA	B	BD	C	D	E	NPT EE	SAE ES	F	G	J	K	KN	LB	OD	P	R	TD	TM	TR	TY	UD	UM	UW	WB	XI	Y	ZB
1.500	.625	7/16"-20 x .750	5/8"-18 x .750	1/2"-20 x .750	1/2"-20 x 1.125	1.124	1.188	.375	.500	2.500	1/2	-8	.375	1.750	1.500	.406	.562	4.625	1.875	2.875	1.625	1.000	3.000	.375	2.750	1.380	5.000	4.000	1.000	3.438	2.000	6.156
	1.000	3/4"-16 x 1.125	1"-14 x 1.125	7/8"-14 x 1.125	7/8"-14 x 1.875	1.499		.500	.875																				1.375	3.812	2.375	6.531
2.000	1.000	3/4"-16 x 1.125	1"-14 x 1.125	7/8"-14 x 1.125	7/8"-14 x 1.875	1.499	1.438	.500	.875	3.000	1/2	-8	.625	1.750	1.500	.531	.750	4.625	2.375	2.875	2.050	1.375	3.500	.500	3.250	1.500	6.250	4.750	1.375	3.813	2.375	6.656
	1.375	1"-14 x 1.625	1 3/8"-12 x 1.625	1 1/4"-12 x 1.625	1 1/4"-12 x 2.500	1.999		.625	1.125																				1.625	4.063	2.625	6.906
2.500	1.000	3/4"-16 x 1.125	1"-14 x 1.125	7/8"-14 x 1.125	7/8"-14 x 1.875	1.499	1.438	.500	.875	3.500	1/2	-8	.625	1.750	1.500	.531	.750	4.750	3.000	3.000	2.550	1.375	4.000	.500	3.750	1.750	6.750	5.250	1.375	3.875	2.375	6.781
	1.375	1"-14 x 1.625	1 3/8"-12 x 1.625	1 1/4"-12 x 1.625	1 1/4"-12 x 2.500	1.999		.625	1.125																				1.625	4.125	2.625	7.031
	1.750	1 1/4"-12 x 2.000	1 3/4"-12 x 2.000	1 1/2"-12 x 2.000	1 1/2"-12 x 3.000	2.374		.750	1.500																				1.875	4.375	2.875	7.281
3.250	1.375	1"-14 x 1.625	1 3/8"-12 x 1.625	1 1/4"-12 x 1.625	1 1/4"-12 x 2.500	1.999	1.938	.625	1.125	4.500	3/4	-12	.750	2.000	1.750	.656	.938	5.500	3.875	3.500	3.250	1.750	5.000	.625	4.750	2.000	8.500	6.750	1.625	4.500	2.750	7.906
	1.750	1 1/4"-12 x 2.000	1 3/4"-12 x 2.000	1 1/2"-12 x 2.000	1 1/2"-12 x 3.000	2.374		.750	1.500																				1.875	4.750	3.000	8.156
	2.000	1 1/2"-12 x 2.250	2"-12 x 2.250	1 3/4"-12 x 2.250	1 3/4"-12 x 3.500	2.624		.875	1.688																				2.000	4.875	3.125	8.281
4.000	1.750	1 1/4"-12 x 2.000	1 3/4"-12 x 2.000	1 1/2"-12 x 2.000	1 1/2"-12 x 3.000	2.374	1.938	.750	1.500	5.000	3/4	-12	.875	2.000	1.750	.656	.938	5.750	4.750	3.750	3.820	1.750	5.500	.625	5.250	2.500	9.000	7.250	1.875	4.875	3.000	8.406
	2.000	1 1/2"-12 x 2.250	2"-12 x 2.250	1 3/4"-12 x 2.250	1 3/4"-12 x 3.500	2.624		.875	1.688																				2.000	5.000	3.125	8.531
	2.500	1 7/8"-12 x 3.000	2 1/2"-12 x 3.000	2 1/4"-12 x 3.000	2 1/4"-12 x 4.500	3.124		1.000	2.062																				2.250	5.250	3.375	8.781
5.000	2.000	1 1/2"-12 x 2.250	2"-12 x 2.250	1 3/4"-12 x 2.250	1 3/4"-12 x 3.500	2.624	1.938	.875	1.688	6.500	3/4	-12	.875	2.000	1.750	.875	1.312	6.250	6.000	4.250	4.950	1.750	7.000	.875	6.750	3.000	10.500	9.000	2.000	5.250	3.125	9.250
	2.500	1 7/8"-12 x 3.000	2 1/2"-12 x 3.000	2 1/4"-12 x 3.000	2 1/4"-12 x 4.500	3.124		1.000	2.062																				2.250	5.500	3.375	9.500
	3.000	2 1/4"-12 x 3.500	3"-12 x 3.500	2 3/4"-12 x 3.500	2 3/4"-12 x 5.500	3.749		1.000	2.625																				2.250	5.500	3.375	9.500
	3.500	2 1/2"-12 x 3.500	3 1/2"-12 x 3.500	3 1/4"-12 x 3.500	3 1/4"-12 x 6.500	4.249		1.000	3.000																				2.250	5.500	3.375	9.500
6.000	2.500	1 7/8"-12 x 3.000	2 1/2"-12 x 3.000	2 1/4"-12 x 3.000	2 1/4"-12 x 4.500	3.124	2.938	1.000	2.062	7.500	1	-16	1.000	2.250	2.250	1.000	1.500	7.375	7.000	4.875	5.730	2.000	8.500	1.000	7.750	3.750	12.500	10.250	2.250	5.938	3.500	10.750
	3.000	2 1/4"-12 x 3.500	3"-12 x 3.500	2 3/4"-12 x 3.500	2 3/4"-12 x 5.500	3.749			2.625																							
	3.500	2 1/2"-12 x 3.500	3 1/2"-12 x 3.500	3 1/4"-12 x 3.500	3 1/4"-12 x 6.500	4.249			3.000																							
	4.000	3"-12 x 4.000	4"-12 x 4.000	3 3/4"-12 x 4.000	3 3/4"-12 x 7.500	4.749			3.375																							
BORE	MM	KM & KF	KD	KI	KA	B	BD	C	D	E	EE	ES	F	G	J	K	KN	LB	OD	P	R	TD	TM	TR	TY	UD	UM	UW	WB	XI	Y	ZB

FILE: 3.06_HP06L2.dwg REV: 02/09/2010

27650 Groesbeck Hwy Roseville, MI 48066-2759 Phone 586.775.7211 • Fax 586.775.4545 Toll Free 800.526.7968 e-mail: sales@peninsularcylinders.com www.peninsularcylinders.com

INTERMEDIATE TRUNNION

Heavy Duty Hydraulic Cylinder • 3000 P.S.I. Working Pressure • 5000 P.S.I. Rated Pressure

Peninsular Mounting Style: **HP 6**

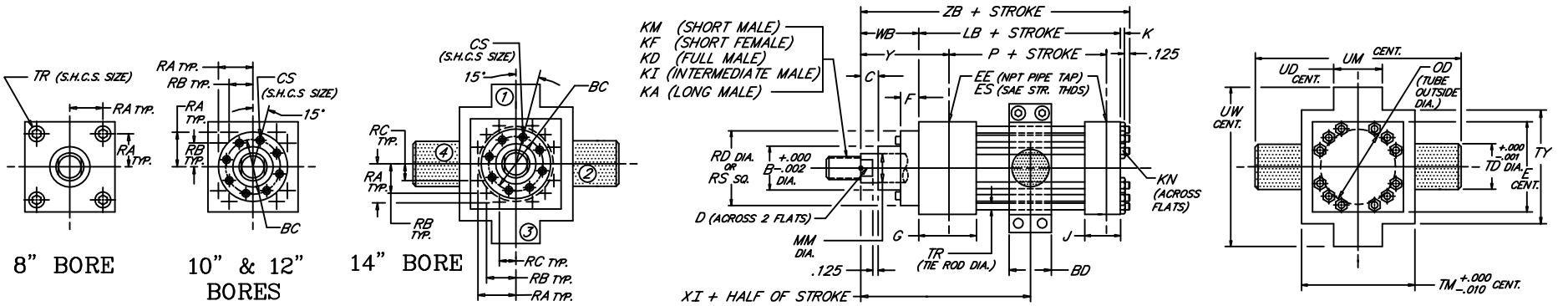

BORE	ROD MM	ROD THREAD X LENGTH KM & KF	KD	KI	KA	B	BC	BD	C	CS	D	E	NPT EE	SAE ES	F	G	J	K	KN	LB	P	OD	RA	RB	RC	RD	RS	TD	TM	TR	TY	UD	UM	UW	WB	XI	Y	ZB
	3.500	2 1/2"-12 x 3.500	3 1/2"-12 x 3.500	3 1/4"-12 x 3.500	3 1/4"-12 x 6.500	4.249					3.000																											
	4.000	3"-12 x 4.000	4"-12 x 4.000	3 3/4"-12 x 4.000	3 3/4"-12 x 7.500	4.749					3.375																											
8.000	4.500	3 1/4"-12 x 4.500	4 1/2"-12 x 4.500	4 1/4"-12 x 4.500	4 1/4"-12 x 8.250	5.249	---	3.438	1.000	---	3.875	9.500	1 1/2	-24	1.000	3.000	3.000	1.188	1.844	9.500	6.125	9.250	3.750	---	---	---	9.500	3.000	11.000	1.250	9.750	5.000	17.000	12.750	2.250	7.000	3.938	13.063
	5.000	3 1/2"-12 x 5.000	5"-12 x 5.000	4 3/4"-12 x 5.000	4 3/4"-12 x 9.000	5.749					4.250																											
	5.500	4"-12 x 5.500	5 1/2"-12 x 5.500	5 1/4"-12 x 5.500	5 1/4"-12 x 10.000	6.249					4.625																											
	4.500	3 1/4"-12 x 4.500	4 1/2"-12 x 4.500	4 1/4"-12 x 4.500	4 1/4"-12 x 8.250	5.249	6.375			.500	3.875				.500										7.260									2.937	9.000	4.750	16.281
	5.000	3 1/2"-12 x 5.000	5"-12 x 5.000	4 3/4"-12 x 5.000	4 3/4"-12 x 9.000	5.749	6.875			.500	4.250				.500										7.750									3.187	9.250	5.000	16.531
10.000	5.500	4"-12 x 5.500	5 1/2"-12 x 5.500	5 1/4"-12 x 5.500	5 1/4"-12 x 10.000	6.249	7.375	4.438	1.000	.500	4.625	12.625	2	-32	.500	3.688	3.688	1.094	1.656	12.125	8.500	11.750	5.291	3.775	---	8.260	---	3.500	14.000	1.125	13.000	6.500	21.000	17.500	3.187	9.250	5.000	16.531
	6.000	4 1/2"-12 x 6.000	6"-12 x 6.000	5 3/4"-12 x 6.000	5 3/4"-12 x 10.000	6.749	8.500			.625	5.125				.875										10.000									3.437	9.500	5.250	16.781
	7.000	5"-12 x 7.000	7"-12 x 7.000	6 1/2"-12 x 7.000	6 1/2"-12 x 10.000	7.749	9.437			.625	6.000				.875										10.500									3.437	9.500	5.250	16.781
	5.500	4"-12 x 5.500	5 1/2"-12 x 5.500	5 1/4"-12 x 5.500	5 1/4"-12 x 10.000	6.249	7.375			.500	4.625				.500										8.260									3.187	10.437	5.375	19.000
	6.000	4 1/2"-12 x 6.000	6"-12 x 6.000	5 3/4"-12 x 6.000	5 3/4"-12 x 10.000	6.749	8.500	5.500	1.000	.625	5.125	14.875	2 1/2	-32	.875	4.438	4.438	1.188	1.844	14.500	10.125	14.000	6.270	4.555	---	10.000	---	4.000	16.500	1.250	15.500	7.500	24.500	20.750	3.437	10.687	5.625	19.250
12.000	7.000	5"-12 x 7.000	7"-12 x 7.000	6 1/2"-12 x 7.000	6 1/2"-12 x 10.000	7.749	9.437			.625	6.000				.875										10.500									3.437	10.687	5.625	19.250
	8.000	5 3/4"-12 x 8.000	8"-12 x 8.000	7 1/2"-12 x 8.000	7 1/2"-12 x 12.000	8.749	10.500			.625	7.000				.875										12.000									3.437	10.687	5.625	19.250
	7.000	5"-12 x 7.000	7"-12 x 7.000	6 1/2"-12 x 7.000	6 1/2"-12 x 10.000	7.749	9.437				6.000														10.500												
	8.000	5 3/4"-12 x 8.000	8"-12 x 8.000	7 1/2"-12 x 8.000	7 1/2"-12 x 12.000	8.749	10.500				7.000														12.000												
14.000	9.000	6 1/2"-12 x 9.000	9"-12 x 9.000	8 1/2"-12 x 9.000	8 1/2"-12 x 13.500	9.749	11.500	5.500	1.000	.625	7.875	17.125	3	-32	.875	4.875	4.875	1.188	1.844	15.625	10.875	16.000	7.485	6.143	4.409	13.000	---	4.500	19.500	1.250	19.250	8.750	28.500	24.750	3.437	11.250	5.625	20.375
	10.000	7 1/4"-12 x 10.000	10"-12 x 10.000	9 1/2"-12 x 10.000	9 1/2"-12 x 15.000	10.749	12.500				8.625														14.000												
BORE	MM	KM & KF	KD	KI	KA	B	BC	BD	C	CS	D	E	EE	ES	F	G	J	K	KN	LB	P	OD	RA	RB	RC	RD	RS	TD	TM	TR	TY	UD	UM	UW	WB	XI	Y	ZB

FILE: 3.06_HP06L2.dwg REV: 02/09/2010

27650 Groesbeck Hwy Roseville, MI 48066-2759 Phone 586.775.7211 • Fax 586.775.4545 Toll Free 800.526.7968 e-mail: sales@peninsularcylinders.com www.peninsularcylinders.com

CAP TRUNNION

Heavy Duty Hydraulic Cylinder

Peninsular Mounting Style: **HP 7**

•3000 P.S.I. Working Pressure •5000 P.S.I. Rated Pressure

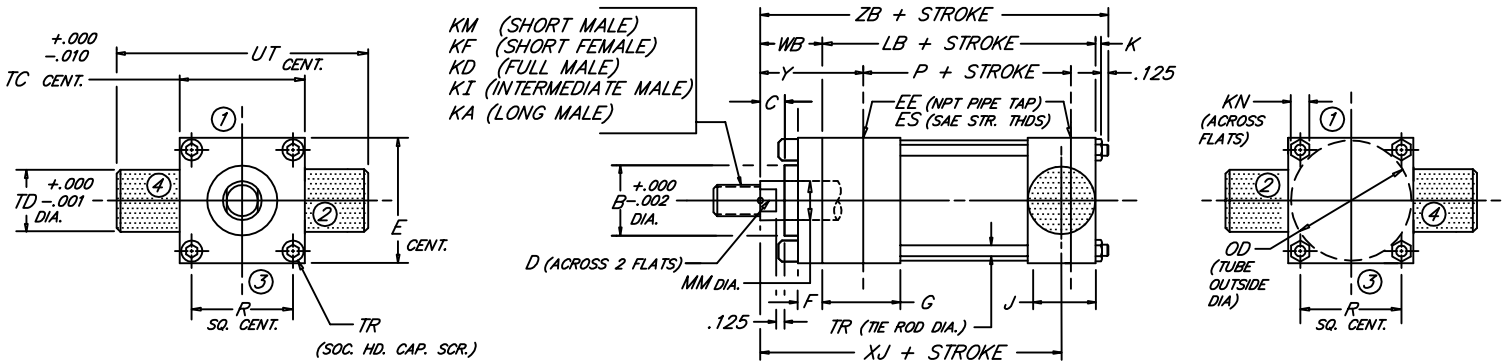

BORE	ROD MM	ROD THREAD X LENGTH KM & KF	KD	KI	KA	B	C	D	E	NPT EE	SAE ES	F	G	J	K	KN	LB	OD	P	R	TC	TD	TR	UT	WB	XJ	Y	ZB
1.500	.625	7/16"-20 x .750	5/8"-18 x .750	1/2"-20 x .750	1/2"-20 x 1.125	1.124	.375	.500	2.500	1/2	-8	.375	1.750	1.500	.406	.562	4.625	1.875	2.875	1.625	2.500	1.000	.375	4.500	1.000	4.875	2.000	6.156
	1.000	3/4"-16 x 1.125	1"-14 x 1.125	7/8"-14 x 1.125	7/8"-14 x 1.875	1.499	.500	.875																	1.375	5.250	2.375	6.531
2.000	1.000	3/4"-16 x 1.125	1"-14 x 1.125	7/8"-14 x 1.125	7/8"-14 x 1.875	1.499	.500	.875	3.000	1/2	-8	.625	1.750	1.500	.531	.750	4.625	2.375	2.875	2.050	3.000	1.375	.500	5.750	1.375	5.250	2.375	6.656
	1.375	1"-14 x 1.625	1 3/8"-12 x 1.625	1 1/4"-12 x 1.625	1 1/4"-12 x 2.500	1.999	.625	1.125																	1.625	5.500	2.625	6.906
2.500	1.000	3/4"-16 x 1.125	1"-14 x 1.125	7/8"-14 x 1.125	7/8"-14 x 1.875	1.499	.500	.875	3.500	1/2	-8	.625	1.750	1.500	.531	.750	4.750	3.000	3.000	2.550	3.500	1.375	.500	6.250	1.375	5.375	2.375	6.781
	1.375	1"-14 x 1.625	1 3/8"-12 x 1.625	1 1/4"-12 x 1.625	1 1/4"-12 x 2.500	1.999	.625	1.125																	1.625	5.625	2.625	7.031
	1.750	1 1/4"-12 x 2.000	1 3/4"-12 x 2.000	1 1/2"-12 x 2.000	1 1/2"-12 x 3.000	2.374	.750	1.500																	1.875	5.875	2.875	7.281
3.250	1.375	1"-14 x 1.625	1 3/8"-12 x 1.625	1 1/4"-12 x 1.625	1 1/4"-12 x 2.500	1.999	.625	1.125	4.500	3/4	-12	.750	2.000	1.750	.656	.938	5.500	3.875	3.500	3.250	4.500	1.750	.625	8.000	1.625	6.250	2.750	7.906
	1.750	1 1/4"-12 x 2.000	1 3/4"-12 x 2.000	1 1/2"-12 x 2.000	1 1/2"-12 x 3.000	2.374	.750	1.500																	1.875	6.500	3.000	8.156
	2.000	1 1/2"-12 x 2.250	2"-12 x 2.250	1 3/4"-12 x 2.250	1 3/4"-12 x 3.500	2.624	.875	1.688																	2.000	6.625	3.125	8.281
4.000	1.750	1 1/4"-12 x 2.000	1 3/4"-12 x 2.000	1 1/2"-12 x 2.000	1 1/2"-12 x 3.000	2.374	.750	1.500	5.000	3/4	-12	.875	2.000	1.750	.656	.938	5.750	4.750	3.750	3.820	5.000	1.750	.625	8.500	1.875	6.750	3.000	8.406
	2.000	1 1/2"-12 x 2.250	2"-12 x 2.250	1 3/4"-12 x 2.250	1 3/4"-12 x 3.500	2.624	.875	1.688																	2.000	6.875	3.125	8.531
	2.500	1 7/8"-12 x 3.000	2 1/2"-12 x 3.000	2 1/4"-12 x 3.000	2 1/4"-12 x 4.500	3.124	1.000	2.062																	2.250	7.125	3.375	8.781
5.000	2.000	1 1/2"-12 x 2.250	2"-12 x 2.250	1 3/4"-12 x 2.250	1 3/4"-12 x 3.500	2.624	.875	1.688	6.500	3/4	-12	.875	2.000	1.750	.875	1.312	6.250	6.000	4.250	4.950	6.500	1.750	.875	10.000	2.000	7.375	3.125	9.250
	2.500	1 7/8"-12 x 3.000	2 1/2"-12 x 3.000	2 1/4"-12 x 3.000	2 1/4"-12 x 4.500	3.124	1.000	2.062																	2.250	7.625	3.375	9.500
	3.000	2 1/4"-12 x 3.500	3"-12 x 3.500	2 3/4"-12 x 3.500	2 3/4"-12 x 5.500	3.749	1.000	2.625																	2.250	7.625	3.375	9.500
	3.500	2 1/2"-12 x 3.500	3 1/2"-12 x 3.500	3 1/4"-12 x 3.500	3 1/4"-12 x 6.500	4.249	1.000	3.000																	2.250	7.625	3.375	9.500
6.000	2.500	1 7/8"-12 x 3.000	2 1/2"-12 x 3.000	2 1/4"-12 x 3.000	2 1/4"-12 x 4.500	3.124	1.000	2.062	7.500	1	-16	1.000	2.250	2.250	1.000	1.500	7.375	7.000	4.875	5.730	7.500	2.000	1.000	11.500	2.250	8.500	3.500	10.750
	3.000	2 1/4"-12 x 3.500	3"-12 x 3.500	2 3/4"-12 x 3.500	2 3/4"-12 x 5.500	3.749		2.625																				
	3.500	2 1/2"-12 x 3.500	3 1/2"-12 x 3.500	3 1/4"-12 x 3.500	3 1/4"-12 x 6.500	4.249		3.000																				
	4.000	3"-12 x 4.000	4"-12 x 4.000	3 3/4"-12 x 4.000	3 3/4"-12 x 7.500	4.749		3.375																				
BORE	MM	KM & KF	KD	KI	KA	B	C	D	E	EE	ES	F	G	J	K	KN	LB	OD	P	R	TC	TD	TR	UT	WB	XJ	Y	ZB

FILE: 3.07_HP07S2.dwg REV: 02/09/2010

27650 Groesbeck Hwy Roseville, MI 48066-2759 Phone 586.775.7211 ∘ Fax 586.775.4545 Toll Free 800.526.7968 e-mail: sales@peninsularcylinders.com www.peninsularcylinders.com

CAP TRUNNION

Heavy Duty Hydraulic Cylinder • 3000 P.S.I. Working Pressure • 5000 P.S.I. Rated Pressure

Peninsular Mounting Style: **HP 7**

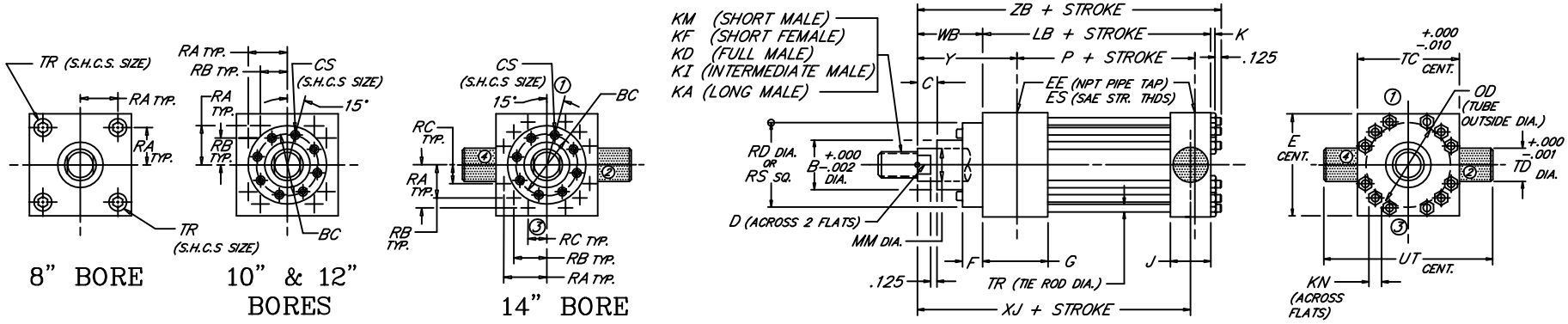

BORE	ROD MM	ROD THREAD X LENGTH KM & KF	KD	KI	KA	B	BC	C	CS	D	E	NPT EE	SAE ES	F	G	J	K	KN	LB	P	OD	RA	RB	RC	RD	RS	TC	TD	TR	UT	WB	Y	XJ	ZB
8.000	3.500	2 1/2"-12 x 3.500	3 1/2"-12 x 3.500	3 1/4"-12 x 3.500	3 1/4"-12 x 6.500	4.249				3.000																								
	4.000	3"-12 x 4.000	4"-12 x 4.000	3 3/4"-12 x 4.000	3 3/4"-12 x 7.500	4.749				3.375																								
	4.500	3 1/4"-12 x 4.500	4 1/2"-12 x 4.500	4 1/4"-12 x 4.500	4 1/4"-12 x 8.250	5.249	---	1.000	---	3.875	9.500	1 1/2	-24	1.000	3.000	3.000	1.188	1.844	9.500	6.125	9.250	3.750	---	---	---	9.500	9.500	3.000	1.250	15.500	2.250	3.938	10.250	13.063
	5.000	3 1/2"-12 x 5.000	5"-12 x 5.000	4 3/4"-12 x 5.000	4 3/4"-12 x 9.000	5.749				4.250																								
	5.500	4"-12 x 5.500	5 1/2"-12 x 5.500	5 1/4"-12 x 5.500	5 1/4"-12 x 10.000	6.249				4.625																								
10.000	4.500	3 1/4"-12 x 4.500	4 1/2"-12 x 4.500	4 1/4"-12 x 4.500	4 1/4"-12 x 8.250	5.249	6.375		.500	3.875				.500											7.260						2.937	4.750	13.218	16.281
	5.000	3 1/2"-12 x 5.000	5"-12 x 5.000	4 3/4"-12 x 5.000	4 3/4"-12 x 9.000	5.749	6.875		.500	4.250				.500											7.750						3.187	5.000	13.468	16.531
	5.500	4"-12 x 5.500	5 1/2"-12 x 5.500	5 1/4"-12 x 5.500	5 1/4"-12 x 10.000	6.249	7.375	1.000	.500	4.625	12.625	2	-32	.500	3.688	3.688	1.094	1.656	12.125	8.500	11.750	5.291	3.775	---	8.260	---	12.625	3.500	1.125	19.625	3.187	5.000	13.468	16.531
	6.000	4 1/2"-12 x 6.000	6"-12 x 6.000	5 3/4"-12 x 6.000	5 3/4"-12 x 10.000	6.749	8.500		.625	5.125				.875											10.000						3.437	5.250	13.718	16.781
	7.000	5"-12 x 7.000	7"-12 x 7.000	6 1/2"-12 x 7.000	6 1/2"-12 x 10.000	7.749	9.437		.625	6.000				.875											10.500						3.437	5.250	13.718	16.781
12.000	5.500	4"-12 x 5.500	5 1/2"-12 x 5.500	5 1/4"-12 x 5.500	5 1/4"-12 x 10.000	6.249	7.375		.500	4.625				.500											8.260						3.187	5.375	15.468	19.000
	6.000	4 1/2"-12 x 6.000	6"-12 x 6.000	5 3/4"-12 x 6.000	5 3/4"-12 x 10.000	6.749	8.500	1.000	.625	5.125	14.875	2 1/2	-32	.875	4.438	4.438	1.188	1.844	14.500	10.125	14.000	6.270	4.555	---	10.000	---	14.875	4.000	1.250	22.875	3.437	5.625	15.718	19.250
	7.000	5"-12 x 7.000	7"-12 x 7.000	6 1/2"-12 x 7.000	6 1/2"-12 x 10.000	7.749	9.437		.625	6.000				.875											10.500						3.437	5.625	15.718	19.250
	8.000	5 3/4"-12 x 8.000	8"-12 x 8.000	7 1/2"-12 x 8.000	7 1/2"-12 x 12.000	8.749	10.500		.625	7.000				.875											12.000						3.437	5.625	15.718	19.250
14.000	7.000	5"-12 x 7.000	7"-12 x 7.000	6 1/2"-12 x 7.000	6 1/2"-12 x 10.000	7.749	9.437			6.000															10.500									
	8.000	5 3/4"-12 x 8.000	8"-12 x 8.000	7 1/2"-12 x 8.000	7 1/2"-12 x 12.000	8.749	10.500	1.000	.625	7.000	17.125	3	-32	.875	4.875	4.875	1.188	1.844	15.625	10.875	16.000	7.485	6.143	4.409	12.000	---	17.125	4.500	1.250	26.125	3.437	5.625	16.625	20.375
	9.000	6 1/2"-12 x 9.000	9"-12 x 9.000	8 1/2"-12 x 9.000	8 1/2"-12 x 13.500	9.749	11.500			7.875															13.000									
	10.000	7 1/4"-12 x 10.000	10"-12 x 10.000	9 1/2"-12 x 10.000	9 1/2"-12 x 15.000	10.749	12.500			8.625															14.000									
BORE	MM	KM & KF	KD	KI	KA	B	BC	C	CS	D	E	EE	ES	F	G	J	K	KN	LB	P	OD	RA	RB	RC	RD	RS	TC	TD	TR	UT	WB	Y	XJ	ZB

FILE: 3.07_HP07L2.dwg REV: 02/09/2010

27650 Groesbeck Hwy Roseville, MI 48066-2759 Phone 586.775.7211 • Fax 586.775.4545 Toll Free 800.526.7968 e-mail: sales@peninsularcylinders.com www.peninsularcylinders.com

HEAD TIE ROD EXTENDED

Heavy Duty Hydraulic Cylinder • 3000 P.S.I. Working Pressure • 5000 P.S.I. Rated Pressure

Peninsular Mounting Style: **HP 8**

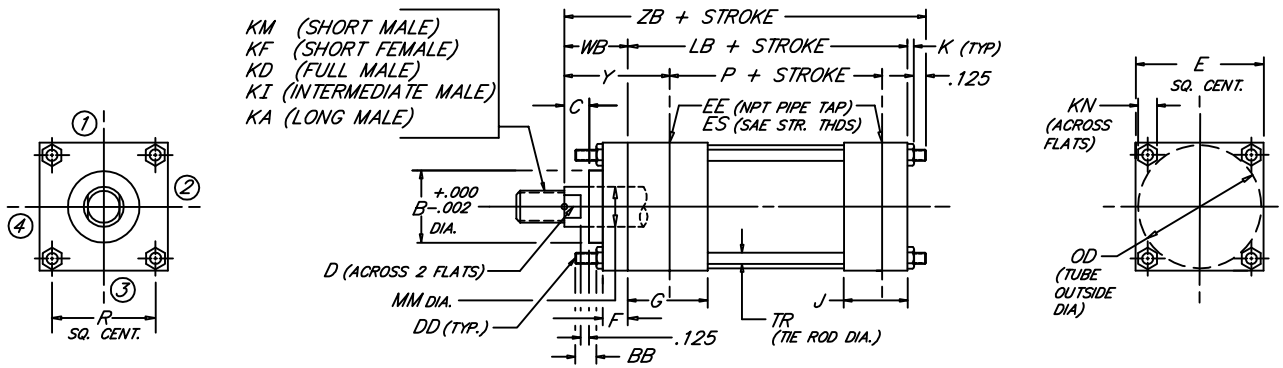

BORE	ROD MM	ROD THREAD X LENGTH KM & KF	KD	KI	KA	B	BB	C	D	DD	E	NPT EE	SAE ES	F	G	J	K	KN	LB	OD	P	R	TR	WB	Y	ZB
1.500	.625	7/16"-20 x .750	5/8"-18 x .750	1/2"-20 x .750	1/2"-20 x 1.125	1.124	1.375	.375	.500	3/8"-24	2.500	1/2	-8	.375	1.750	1.500	.406	.562	4.625	1.875	2.875	1.625	.375	1.000	2.000	6.156
	1.000	3/4"-16 x 1.125	1"-14 x 1.125	7/8"-14 x 1.125	7/8"-14 x 1.875	1.499		.500	.875															1.375	2.375	6.531
2.000	1.000	3/4"-16 x 1.125	1"-14 x 1.125	7/8"-14 x 1.125	7/8"-14 x 1.875	1.499	1.812	.500	.875	1/2"-20	3.000	1/2	-8	.625	1.750	1.500	.531	.750	4.625	2.375	2.875	2.050	.500	1.375	2.375	6.656
	1.375	1"-14 x 1.625	1 3/8"-12 x 1.625	1 1/4"-12 x 1.625	1 1/4"-12 x 2.500	1.999		.625	1.125															1.625	2.625	6.906
2.500	1.000	3/4"-16 x 1.125	1"-14 x 1.125	7/8"-14 x 1.125	7/8"-14 x 1.875	1.499	1.812	.500	.875	1/2"-20	3.500	1/2	-8	.625	1.750	1.500	.531	.750	4.750	3.000	3.000	2.550	.500	1.375	2.375	6.781
	1.375	1"-14 x 1.625	1 3/8"-12 x 1.625	1 1/4"-12 x 1.625	1 1/4"-12 x 2.500	1.999		.625	1.125															1.625	2.625	7.031
	1.750	1 1/4"-12 x 2.000	1 3/4"-12 x 2.000	1 1/2"-12 x 2.000	1 1/2"-12 x 3.000	2.374		.750	1.500															1.875	2.875	7.281
3.250	1.375	1"-14 x 1.625	1 3/8"-12 x 1.625	1 1/4"-12 x 1.625	1 1/4"-12 x 2.500	1.999	2.312	.625	1.125	5/8"-18	4.500	3/4	-12	.750	2.000	1.750	.656	.938	5.500	3.875	3.500	3.250	.625	1.625	2.750	7.906
	1.750	1 1/4"-12 x 2.000	1 3/4"-12 x 2.000	1 1/2"-12 x 2.000	1 1/2"-12 x 3.000	2.374		.750	1.500															1.875	3.000	8.156
	2.000	1 1/2"-12 x 2.250	2"-12 x 2.250	1 3/4"-12 x 2.250	1 3/4"-12 x 3.500	2.624		.875	1.688															2.000	3.125	8.281
4.000	1.750	1 1/4"-12 x 2.000	1 3/4"-12 x 2.000	1 1/2"-12 x 2.000	1 1/2"-12 x 3.000	2.374	2.312	.750	1.500	5/8"-18	5.000	3/4	-12	.875	2.000	1.750	.656	.938	5.750	4.750	3.750	3.820	.625	1.875	3.000	8.406
	2.000	1 1/2"-12 x 2.250	2"-12 x 2.250	1 3/4"-12 x 2.250	1 3/4"-12 x 3.500	2.624		.875	1.688															2.000	3.125	8.531
	2.500	1 7/8"-12 x 3.000	2 1/2"-12 x 3.000	2 1/4"-12 x 3.000	2 1/4"-12 x 4.500	3.124		1.000	2.062															2.250	3.375	8.781
5.000	2.000	1 1/2"-12 x 2.250	2"-12 x 2.250	1 3/4"-12 x 2.250	1 3/4"-12 x 3.500	2.624	3.188	.875	1.688	7/8"-14	6.500	3/4	-12	.875	2.000	1.750	.875	1.312	6.250	6.000	4.250	4.950	.875	2.000	3.125	9.250
	2.500	1 7/8"-12 x 3.000	2 1/2"-12 x 3.000	2 1/4"-12 x 3.000	2 1/4"-12 x 4.500	3.124		1.000	2.062															2.250	3.375	9.500
	3.000	2 1/4"-12 x 3.500	3"-12 x 3.500	2 3/4"-12 x 3.500	2 3/4"-12 x 5.500	3.749		1.000	2.625															2.250	3.375	9.500
	3.500	2 1/2"-12 x 3.500	3 1/2"-12 x 3.500	3 1/4"-12 x 3.500	3 1/4"-12 x 6.500	4.249		1.000	3.000															2.250	3.375	9.500
6.000	2.500	1 7/8"-12 x 3.000	2 1/2"-12 x 3.000	2 1/4"-12 x 3.000	2 1/4"-12 x 4.500	3.124	3.625	1.000	2.062	1"-14	7.500	1	-16	1.000	2.250	2.250	1.000	1.500	7.375	7.000	4.875	5.730	1.000	2.250	3.500	10.750
	3.000	2 1/4"-12 x 3.500	3"-12 x 3.500	2 3/4"-12 x 3.500	2 3/4"-12 x 5.500	3.749			2.625																	
	3.500	2 1/2"-12 x 3.500	3 1/2"-12 x 3.500	3 1/4"-12 x 3.500	3 1/4"-12 x 6.500	4.249			3.000																	
	4.000	3"-12 x 4.000	4"-12 x 4.000	3 3/4"-12 x 4.000	3 3/4"-12 x 7.500	4.749			3.375																	
BORE	MM	KM & KF	KD	KI	KA	B	BB	C	D	DD	E	EE	ES	F	G	J	K	KN	LB	OD	P	R	TR	WB	Y	ZB

FILE: 3.08_HP08S2.dwg REV: 02/09/2010

27650 Groesbeck Hwy Roseville, MI 48066-2759 Phone 586.775.7211 • Fax 586.775.4545 Toll Free 800.526.7968 e-mail: sales@peninsularcylinders.com www.peninsularcylinders.com

HEAD TIE ROD EXTENDED

Heavy Duty Hydraulic Cylinder

•3000 P.S.I. Working Pressure •5000 P.S.I. Rated Pressure

Peninsular Mounting Style: **HP 8**

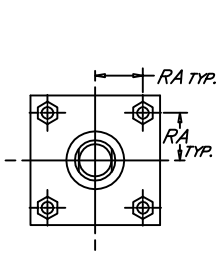

8" BORE

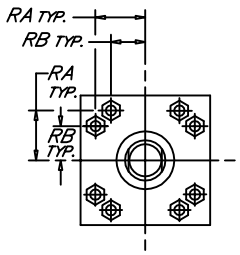

10" & 12" BORES

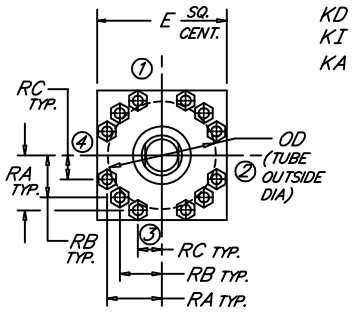

14" BORE

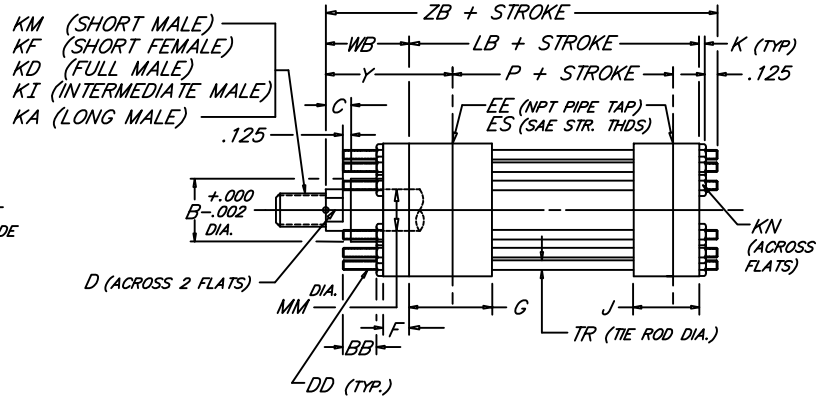

BORE	ROD MM	ROD THREAD X LENGTH KM & KF	KD	KI	KA	B	BB	C	D	DD	E	NPT EE	SAE ES	F	G	J	K	KN	LB	P	OD	RA	RB	RC	TR	WB	Y	ZB
8.000	3.500	2 1/2"-12 x 3.500	3 1/2"-12 x 3.500	3 1/4"-12 x 3.500	3 1/4"-12 x 6.500	4.249	4.500	1.000	3.000	1 1/4"-12	9.500	1 1/2	-24	1.000	3.000	3.000	1.188	1.844	9.500	6.125	9.250	3.750	---	---	1.250	2.250	3.938	13.063
	4.000	3"-12 x 4.000	4"-12 x 4.000	3 3/4"-12 x 4.000	3 3/4"-12 x 7.500	4.749			3.375																			
	4.500	3 1/4"-12 x 4.500	4 1/2"-12 x 4.500	4 1/4"-12 x 4.500	4 1/4"-12 x 8.250	5.249			3.875																			
	5.000	3 1/2"-12 x 5.000	5"-12 x 5.000	4 3/4"-12 x 5.000	4 3/4"-12 x 9.000	5.749			4.250																			
	5.500	4"-12 x 5.500	5 1/2"-12 x 5.500	5 1/4"-12 x 5.500	5 1/4"-12 x 10.000	6.249			4.625																			
10.000	4.500	3 1/4"-12 x 4.500	4 1/2"-12 x 4.500	4 1/4"-12 x 4.500	4 1/4"-12 x 8.250	5.249	4.125	1.000	3.875	1 1/8"-12	12.625	2	-32	1.250	3.688	3.688	1.094	1.656	12.125	8.500	11.750	5.291	3.775	---	1.125	2.937	4.750	16.281
	5.000	3 1/2"-12 x 5.000	5"-12 x 5.000	4 3/4"-12 x 5.000	4 3/4"-12 x 9.000	5.749			4.250																	3.187	5.000	16.531
	5.500	4"-12 x 5.500	5 1/2"-12 x 5.500	5 1/4"-12 x 5.500	5 1/4"-12 x 10.000	6.249			4.625																	3.187	5.000	16.531
	6.000	4 1/2"-12 x 6.000	6"-12 x 6.000	5 3/4"-12 x 6.000	5 3/4"-12 x 10.000	6.749			5.125																	3.437	5.250	16.781
	7.000	5"-12 x 7.000	7"-12 x 7.000	6 1/2"-12 x 7.000	6 1/2"-12 x 10.000	7.749			6.000																	3.437	5.250	16.781
12.000	5.500	4"-12 x 5.500	5 1/2"-12 x 5.500	5 1/4"-12 x 5.500	5 1/4"-12 x 10.000	6.249	4.500	1.000	4.625	1 1/4"-12	14.875	2 1/2	-32	1.500	4.438	4.438	1.188	1.844	14.500	10.125	14.000	6.270	4.555	---	1.250	3.187	5.375	19.000
	6.000	4 1/2"-12 x 6.000	6"-12 x 6.000	5 3/4"-12 x 6.000	5 3/4"-12 x 10.000	6.749			5.125																	3.437	5.625	19.250
	7.000	5"-12 x 7.000	7"-12 x 7.000	6 1/2"-12 x 7.000	6 1/2"-12 x 10.000	7.749			6.000																	3.437	5.625	19.250
	8.000	5 3/4"-12 x 8.000	8"-12 x 8.000	7 1/2"-12 x 8.000	7 1/2"-12 x 12.000	8.749			7.000																	3.437	5.625	19.250
14.000	7.000	5"-12 x 7.000	7"-12 x 7.000	6 1/2"-12 x 7.000	6 1/2"-12 x 10.000	7.749	4.500	1.000	6.000	1 1/4"-12	17.125	3	-32	1.938	4.875	4.875	1.188	1.844	15.625	10.875	16.000	7.485	6.143	4.409	1.250	3.437	5.625	20.375
	8.000	5 3/4"-12 x 8.000	8"-12 x 8.000	7 1/2"-12 x 8.000	7 1/2"-12 x 12.000	8.749			7.000																			
	9.000	6 1/2"-12 x 9.000	9"-12 x 9.000	8 1/2"-12 x 9.000	8 1/2"-12 x 13.500	9.749			7.875																			
	10.000	7 1/4"-12 x 10.000	10"-12 x 10.000	9 1/2"-12 x 10.000	9 1/2"-12 x 15.000	10.749			8.625																			
BORE	MM	KM & KF	KD	KI	KA	B	BB	C	D	DD	E	EE	ES	F	G	J	K	KN	LB	P	OD	RA	RB	RC	TR	WB	Y	ZB

FILE: 3.08_HP08L2.dwg REV: 02/09/2010

27650 Groesbeck Hwy Roseville, MI 48066-2759 Phone 586.775.7211 ∘ Fax 586.775.4545 Toll Free 800.526.7968 e-mail: sales@peninsularcylinders.com www.peninsularcylinders.com

CAP TIE ROD EXTENDED

Peninsular Mounting Style: **HP 11**

Heavy Duty Hydraulic Cylinder • 3000 P.S.I. Working Pressure • 5000 P.S.I. Rated Pressure

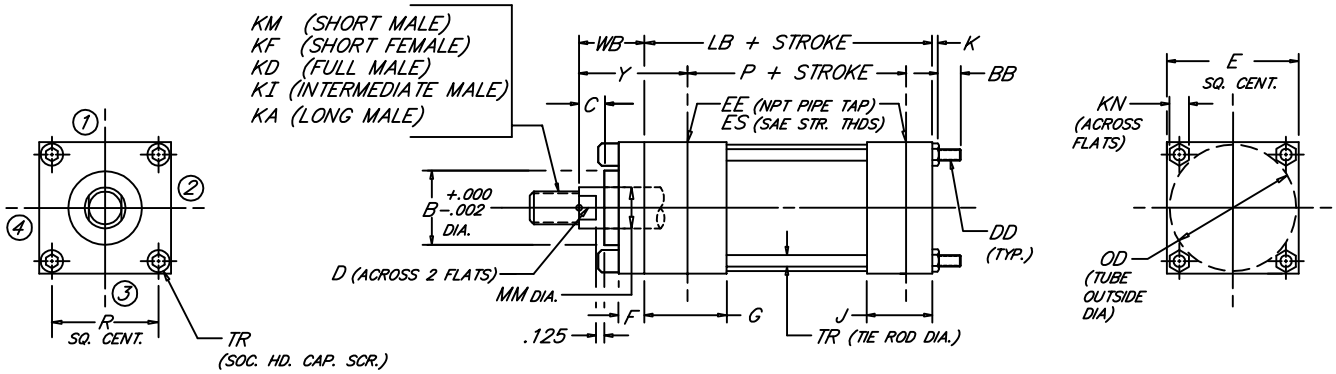

BORE	ROD MM	ROD THREAD X LENGTH KM & KF	KD	KI	KA	B	BB	C	D	DD	E	NPT EE	SAE ES	F	G	J	K	KN	LB	OD	P	R	TR	WB	Y
1.500	.625	7/16"-20 x .750	5/8"-18 x .750	1/2"-20 x .750	1/2"-20 x 1.125	1.124	1.375	.375	.500	3/8"-24	2.500	1/2	-8	.375	1.750	1.500	.406	.562	4.625	1.875	2.875	1.625	.375	1.000	2.000
	1.000	3/4"-16 x 1.125	1"-14 x 1.125	7/8"-14 x 1.125	7/8"-14 x 1.875	1.499		.500	.875															1.375	2.375
2.000	1.000	3/4"-16 x 1.125	1"-14 x 1.125	7/8"-14 x 1.125	7/8"-14 x 1.875	1.499	1.812	.500	.875	1/2"-20	3.000	1/2	-8	.625	1.750	1.500	.531	.750	4.625	2.375	2.875	2.050	.500	1.375	2.375
	1.375	1"-14 x 1.625	1 3/8"-12 x 1.625	1 1/4"-12 x 1.625	1 1/4"-12 x 2.500	1.999		.625	1.125															1.625	2.625
2.500	1.000	3/4"-16 x 1.125	1"-14 x 1.125	7/8"-14 x 1.125	7/8"-14 x 1.875	1.499	1.812	.500	.875	1/2"-20	3.500	1/2	-8	.625	1.750	1.500	.531	.750	4.750	3.000	3.000	2.550	.500	1.375	2.375
	1.375	1"-14 x 1.625	1 3/8"-12 x 1.625	1 1/4"-12 x 1.625	1 1/4"-12 x 2.500	1.999		.625	1.125															1.625	2.625
	1.750	1 1/4"-12 x 2.000	1 3/4"-12 x 2.000	1 1/2"-12 x 2.000	1 1/2"-12 x 3.000	2.374		.750	1.500															1.875	2.875
3.250	1.375	1"-14 x 1.625	1 3/8"-12 x 1.625	1 1/4"-12 x 1.625	1 1/4"-12 x 2.500	1.999	2.312	.625	1.125	5/8"-18	4.500	3/4	-12	.750	2.000	1.750	.656	.938	5.500	3.875	3.500	3.250	.625	1.625	2.750
	1.750	1 1/4"-12 x 2.000	1 3/4"-12 x 2.000	1 1/2"-12 x 2.000	1 1/2"-12 x 3.000	2.374		.750	1.500															1.875	3.000
	2.000	1 1/2"-12 x 2.250	2"-12 x 2.250	1 3/4"-12 x 2.250	1 3/4"-12 x 3.500	2.624		.875	1.688															2.000	3.125
4.000	1.750	1 1/4"-12 x 2.000	1 3/4"-12 x 2.000	1 1/2"-12 x 2.000	1 1/2"-12 x 3.000	2.374	2.312	.750	1.500	5/8"-18	5.000	3/4	-12	.875	2.000	1.750	.656	.938	5.750	4.750	3.750	3.820	.625	1.875	3.000
	2.000	1 1/2"-12 x 2.250	2"-12 x 2.250	1 3/4"-12 x 2.250	1 3/4"-12 x 3.500	2.624		.875	1.688															2.000	3.125
	2.500	1 7/8"-12 x 3.000	2 1/2"-12 x 3.000	2 1/4"-12 x 3.000	2 1/4"-12 x 4.500	3.124		1.000	2.062															2.250	3.375
5.000	2.000	1 1/2"-12 x 2.250	2"-12 x 2.250	1 3/4"-12 x 2.250	1 3/4"-12 x 3.500	2.624	3.188	.875	1.688	7/8"-14	6.500	3/4	-12	.875	2.000	1.750	.875	1.312	6.250	6.000	4.250	4.950	.875	2.000	3.125
	2.500	1 7/8"-12 x 3.000	2 1/2"-12 x 3.000	2 1/4"-12 x 3.000	2 1/4"-12 x 4.500	3.124		1.000	2.062															2.250	3.375
	3.000	2 1/4"-12 x 3.500	3"-12 x 3.500	2 3/4"-12 x 3.500	2 3/4"-12 x 5.500	3.749		1.000	2.625															2.250	3.375
	3.500	2 1/2"-12 x 3.500	3 1/2"-12 x 3.500	3 1/4"-12 x 3.500	3 1/4"-12 x 6.500	4.249		1.000	3.000															2.250	3.375
6.000	2.500	1 7/8"-12 x 3.000	2 1/2"-12 x 3.000	2 1/4"-12 x 3.000	2 1/4"-12 x 4.500	3.124	3.625	1.000	2.062	1"-14	7.500	1	-16	1.000	2.250	2.250	1.000	1.500	7.375	7.000	4.875	5.730	1.000	2.250	3.500
	3.000	2 1/4"-12 x 3.500	3"-12 x 3.500	2 3/4"-12 x 3.500	2 3/4"-12 x 5.500	3.749			2.625																
	3.500	2 1/2"-12 x 3.500	3 1/2"-12 x 3.500	3 1/4"-12 x 3.500	3 1/4"-12 x 6.500	4.249			3.000																
	4.000	3"-12 x 4.000	4"-12 x 4.000	3 3/4"-12 x 4.000	3 3/4"-12 x 7.500	4.749			3.375																
BORE	MM	KM & KF	KD	KI	KA	B	BB	C	D	DD	E	EE	ES	F	G	J	K	KN	LB	OD	P	R	TR	WB	Y

FILE: 3.11_HP11S2.dwg REV: 02/09/2010

27650 Groesbeck Hwy Roseville, MI 48066-2759 Phone 586.775.7211 • Fax 586.775.4545 Toll Free 800.526.7968 e-mail: sales@peninsularcylinders.com www.peninsularcylinders.com

CAP TIE ROD EXTENDED

Peninsular Mounting Style: **HP 11**

Heavy Duty Hydraulic Cylinder

• 3000 P.S.I. Working Pressure • 5000 P.S.I. Rated Pressure

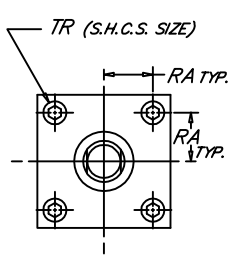

8" BORE

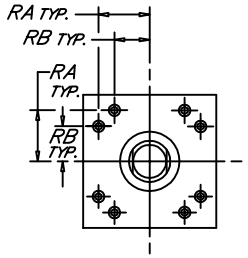

10" & 12" BORES

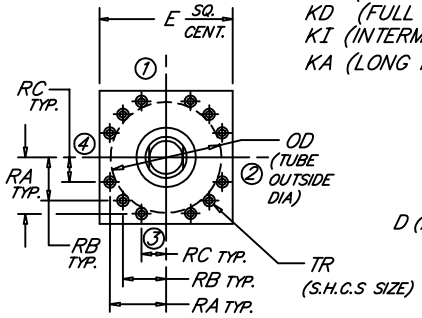

14" BORE

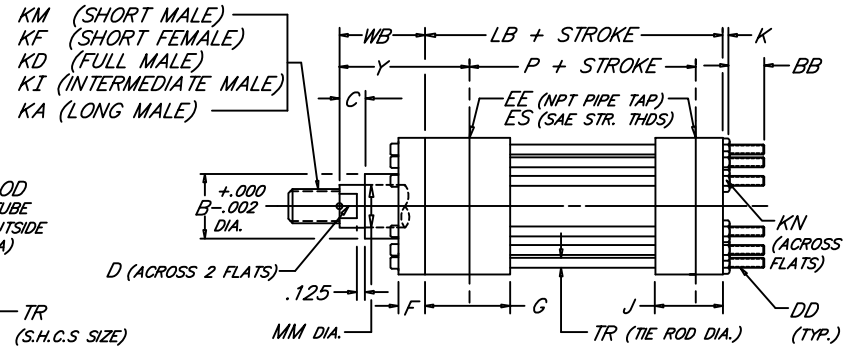

BORE	ROD MM	ROD THREAD X LENGTH KM & KF	KD	KI	KA	B	BB	C	D	DD	E	NPT EE	SAE ES	F	G	J	K	KN	LB	P	OD	RA	RB	RC	TR	WB	Y
8.000	3.500	2 1/2"-12 x 3.500	3 1/2"-12 x 3.500	3 1/4"-12 x 3.500	3 1/4"-12 x 6.500		4.500	1.000	3.000	1 1/4"-12	9.500	1 1/2	-24	1.000	3.000	3.000	1.188	1.844	9.500	6.125	9.250	3.750	---	---	1.250	2.250	3.938
	4.000	3"-12 x 4.000	4"-12 x 4.000	3 3/4"-12 x 4.000	3 3/4"-12 x 7.500	4.749			3.375																		
	4.500	3 1/4"-12 x 4.500	4 1/2"-12 x 4.500	4 1/4"-12 x 4.500	4 1/4"-12 x 8.250	5.249			3.875																		
	5.000	3 1/2"-12 x 5.000	5"-12 x 5.000	4 3/4"-12 x 5.000	4 3/4"-12 x 9.000	5.749			4.250																		
	5.500	4"-12 x 5.500	5 1/2"-12 x 5.500	5 1/4"-12 x 5.500	5 1/4"-12 x 10.000	6.249			4.625																		
10.000	4.500	3 1/4"-12 x 4.500	4 1/2"-12 x 4.500	4 1/4"-12 x 4.500	4 1/4"-12 x 8.250	5.249	4.125	1.000	3.875	1 1/8"-12	12.625	2	-32	1.250	3.688	3.688	1.094	1.656	12.125	8.500	11.750	5.291	3.775	---	1.125	2.937	4.750
	5.000	3 1/2"-12 x 5.000	5"-12 x 5.000	4 3/4"-12 x 5.000	4 3/4"-12 x 9.000	5.749			4.250																	3.187	5.000
	5.500	4"-12 x 5.500	5 1/2"-12 x 5.500	5 1/4"-12 x 5.500	5 1/4"-12 x 10.000	6.249			4.625																	3.187	5.000
	6.000	4 1/2"-12 x 6.000	6"-12 x 6.000	5 3/4"-12 x 6.000	5 3/4"-12 x 10.000	6.749			5.125																	3.437	5.250
	7.000	5"-12 x 7.000	7"-12 x 7.000	6 1/2"-12 x 7.000	6 1/2"-12 x 10.000	7.749			6.000																	3.437	5.250
12.000	5.500	4"-12 x 5.500	5 1/2"-12 x 5.500	5 1/4"-12 x 5.500	5 1/4"-12 x 10.000	6.249	4.500	1.000	4.625	1 1/4"-12	14.875	2 1/2	-32	1.500	4.438	4.438	1.188	1.844	14.500	10.125	14.000	6.270	4.555	---	1.250	3.187	5.375
	6.000	4 1/2"-12 x 6.000	6"-12 x 6.000	5 3/4"-12 x 6.000	5 3/4"-12 x 10.000	6.749			5.125																	3.437	5.625
	7.000	5"-12 x 7.000	7"-12 x 7.000	6 1/2"-12 x 7.000	6 1/2"-12 x 10.000	7.749			6.000																	3.437	5.625
	8.000	5 3/4"-12 x 8.000	8"-12 x 8.000	7 1/2"-12 x 8.000	7 1/2"-12 x 12.000	8.749			7.000																	3.437	5.625
14.000	7.000	5"-12 x 7.000	7"-12 x 7.000	6 1/2"-12 x 7.000	6 1/2"-12 x 10.000	7.749	4.500	1.000	6.000	1 1/4"-12	17.125	3	-32	1.938	4.875	4.875	1.188	1.844	15.625	10.875	16.000	7.485	6.143	4.409	1.250	3.437	5.625
	8.000	5 3/4"-12 x 8.000	8"-12 x 8.000	7 1/2"-12 x 8.000	7 1/2"-12 x 12.000	8.749			7.000																		
	9.000	6 1/2"-12 x 9.000	9"-12 x 9.000	8 1/2"-12 x 9.000	8 1/2"-12 x 13.500	9.749			7.875																		
	10.000	7 1/4"-12 x 10.000	10"-12 x 10.000	9 1/2"-12 x 10.000	9 1/2"-12 x 15.000	10.749			8.625																		
BORE	MM	KM & KF	KD	KI	KA	B	BB	C	D	DD	E	EE	ES	F	G	J	K	KN	LB	P	OD	RA	RB	RC	TR	WB	Y

FILE: 3.11_HP11L2.dwg REV: 02/09/2010

27650 Groesbeck Hwy Roseville, MI 48066-2759 Phone 586.775.7211 ∘ Fax 586.775.4545 Toll Free 800.526.7968 e-mail: sales@peninsularcylinders.com www.peninsularcylinders.com

HEAD & CAP TIE ROD EXTENDED

Heavy Duty Hydraulic Cylinder • 3000 P.S.I. Working Pressure • 5000 P.S.I. Rated Pressure

Peninsular Mounting Style: **HP 12**

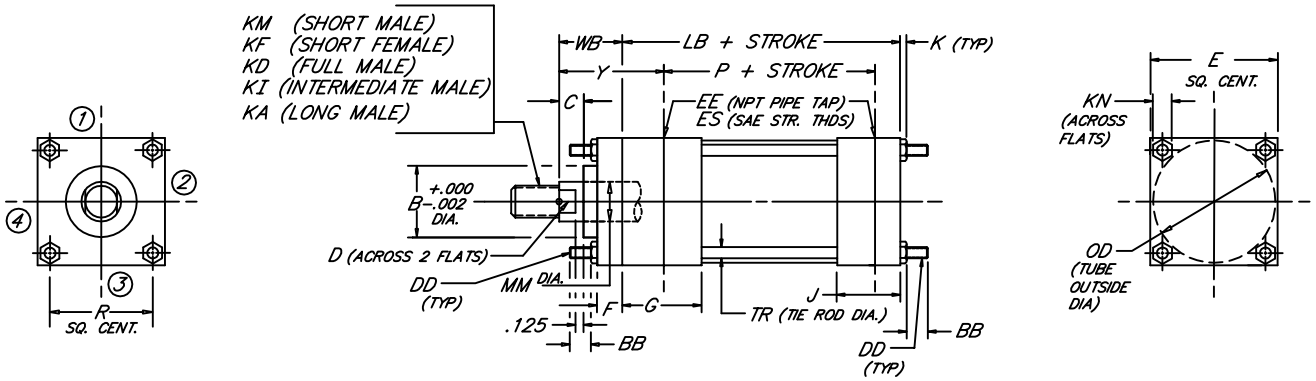

BORE	ROD MM	ROD THREAD X LENGTH KM & KF	KD	KI	KA	B	BB	C	D	DD	E	NPT EE	SAE ES	F	G	J	K	KN	LB	OD	P	R	TR	WB	Y
1.500	.625	7/16"-20 x .750	5/8"-18 x .750	1/2"-20 x .750	1/2"-20 x 1.125	1.124	1.375	.375	.500	3/8"-24	2.500	1/2	-8	.375	1.750	1.500	.406	.562	4.625	1.875	2.875	1.625	.375	1.000	2.000
	1.000	3/4"-16 x 1.125	1"-14 x 1.125	7/8"-14 x 1.125	7/8"-14 x 1.875	1.499		.500	.875															1.375	2.375
2.000	1.000	3/4"-16 x 1.125	1"-14 x 1.125	7/8"-14 x 1.125	7/8"-14 x 1.875	1.499	1.812	.500	.875	1/2"-20	3.000	1/2	-8	.625	1.750	1.500	.531	.750	4.625	2.375	2.875	2.050	.500	1.375	2.375
	1.375	1"-14 x 1.625	1 3/8"-12 x 1.625	1 1/4"-12 x 1.625	1 1/4"-12 x 2.500	1.999		.625	1.125															1.625	2.625
2.500	1.000	3/4"-16 x 1.125	1"-14 x 1.125	7/8"-14 x 1.125	7/8"-14 x 1.875	1.499	1.812	.500	.875	1/2"-20	3.500	1/2	-8	.625	1.750	1.500	.531	.750	4.750	3.000	3.000	2.550	.500	1.375	2.375
	1.375	1"-14 x 1.625	1 3/8"-12 x 1.625	1 1/4"-12 x 1.625	1 1/4"-12 x 2.500	1.999		.625	1.125															1.625	2.625
	1.750	1 1/4"-12 x 2.000	1 3/4"-12 x 2.000	1 1/2"-12 x 2.000	1 1/2"-12 x 3.000	2.374		.750	1.500															1.875	2.875
3.250	1.375	1"-14 x 1.625	1 3/8"-12 x 1.625	1 1/4"-12 x 1.625	1 1/4"-12 x 2.500	1.999	2.312	.625	1.125	5/8"-18	4.500	3/4	-12	.750	2.000	1.750	.656	.938	5.500	3.875	3.500	3.250	.625	1.625	2.750
	1.750	1 1/4"-12 x 2.000	1 3/4"-12 x 2.000	1 1/2"-12 x 2.000	1 1/2"-12 x 3.000	2.374		.750	1.500															1.875	3.000
	2.000	1 1/2"-12 x 2.250	2"-12 x 2.250	1 3/4"-12 x 2.250	1 3/4"-12 x 3.500	2.624		.875	1.688															2.000	3.125
4.000	1.750	1 1/4"-12 x 2.000	1 3/4"-12 x 2.000	1 1/2"-12 x 2.000	1 1/2"-12 x 3.000	2.374	2.312	.750	1.500	5/8"-18	5.000	3/4	-12	.875	2.000	1.750	.656	.938	5.750	4.750	3.750	3.820	.625	1.875	3.000
	2.000	1 1/2"-12 x 2.250	2"-12 x 2.250	1 3/4"-12 x 2.250	1 3/4"-12 x 3.500	2.624		.875	1.688															2.000	3.125
	2.500	1 7/8"-12 x 3.000	2 1/2"-12 x 3.000	2 1/4"-12 x 3.000	2 1/4"-12 x 4.500	3.124		1.000	2.062															2.250	3.375
5.000	2.000	1 1/2"-12 x 2.250	2"-12 x 2.250	1 3/4"-12 x 2.250	1 3/4"-12 x 3.500	2.624	3.188	.875	1.688	7/8"-14	6.500	3/4	-12	.875	2.000	1.750	.875	1.312	6.250	6.000	4.250	4.950	.875	2.000	3.125
	2.500	1 7/8"-12 x 3.000	2 1/2"-12 x 3.000	2 1/4"-12 x 3.000	2 1/4"-12 x 4.500	3.124		1.000	2.062															2.250	3.375
	3.000	2 1/4"-12 x 3.500	3"-12 x 3.500	2 3/4"-12 x 3.500	2 3/4"-12 x 5.500	3.749		1.000	2.625															2.250	3.375
	3.500	2 1/2"-12 x 3.500	3 1/2"-12 x 3.500	3 1/4"-12 x 3.500	3 1/4"-12 x 6.500	4.249		1.000	3.000															2.250	3.375
6.000	2.500	1 7/8"-12 x 3.000	2 1/2"-12 x 3.000	2 1/4"-12 x 3.000	2 1/4"-12 x 4.500	3.124	3.625	1.000	2.062	1"-14	7.500	1	-16	1.000	2.250	2.250	1.000	1.500	7.375	7.000	4.875	5.730	1.000	2.250	3.500
	3.000	2 1/4"-12 x 3.500	3"-12 x 3.500	2 3/4"-12 x 3.500	2 3/4"-12 x 5.500	3.749			2.625																
	3.500	2 1/2"-12 x 3.500	3 1/2"-12 x 3.500	3 1/4"-12 x 3.500	3 1/4"-12 x 6.500	4.249			3.000																
	4.000	3"-12 x 4.000	4"-12 x 4.000	3 3/4"-12 x 4.000	3 3/4"-12 x 7.500	4.749			3.375																
BORE	MM	KM & KF	KD	KI	KA	B	BB	C	D	DD	E	EE	ES	F	G	J	K	KN	LB	OD	P	R	TR	WB	Y

FILE: 3.12_HP12S2.dwg REV: 02/09/2010

27650 Groesbeck Hwy Roseville, MI 48066-2759 Phone 586.775.7211 • Fax 586.775.4545 Toll Free 800.526.7968 e-mail: sales@peninsularcylinders.com www.peninsularcylinders.com

HEAD & CAP TIE ROD EXTENDED

Peninsular Mounting Style: **HP 12**

Heavy Duty Hydraulic Cylinder

• 3000 P.S.I. Working Pressure • 5000 P.S.I. Rated Pressure

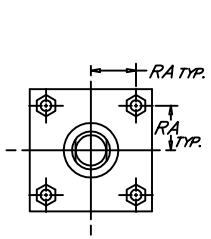

8" BORE

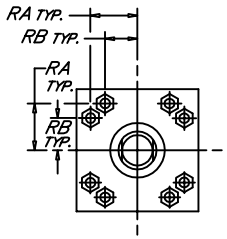

10" & 12" BORES

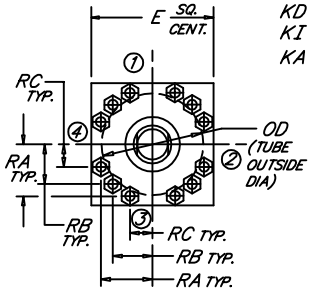

14" BORE

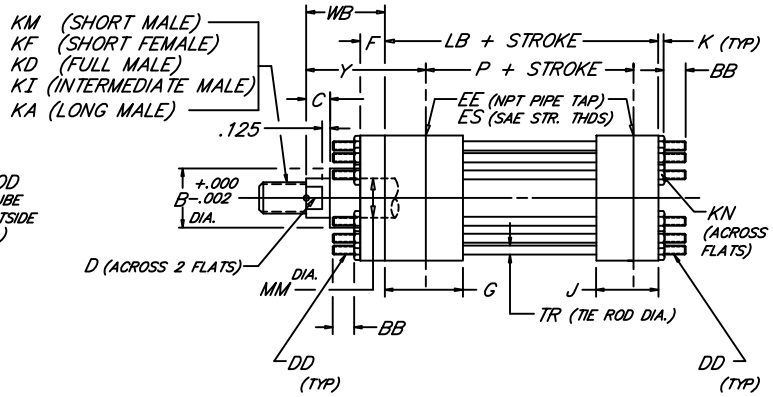

BORE	ROD MM	ROD THREAD X LENGTH KM & KF	KD	KI	KA	B	BB	C	D	DD	E	NPT EE	SAE ES	F	G	J	K	KN	LB	P	OD	RA	RB	RC	TR	WB	Y
8.000	3.500	2 1/2"-12 x 3.500	3 1/2"-12 x 3.500	3 1/4"-12 x 3.500	3 1/4"-12 x 6.500	4.249	4.500	1.000	3.000	1 1/4"-12	9.500	1 1/2	-24	1.000	3.000	3.000	1.188	1.844	9.500	6.125	9.250	3.750	---	---	1.250	2.250	3.938
	4.000	3"-12 x 4.000	4"-12 x 4.000	3 3/4"-12 x 4.000	3 3/4"-12 x 7.500	4.749			3.375																		
	4.500	3 1/4"-12 x 4.500	4 1/2"-12 x 4.500	4 1/4"-12 x 4.500	4 1/4"-12 x 8.250	5.249			3.875																		
	5.000	3 1/2"-12 x 5.000	5"-12 x 5.000	4 3/4"-12 x 5.000	4 3/4"-12 x 9.000	5.749			4.250																		
	5.500	4"-12 x 5.500	5 1/2"-12 x 5.500	5 1/4"-12 x 5.500	5 1/4"-12 x 10.000	6.249			4.625																		
10.000	4.500	3 1/4"-12 x 4.500	4 1/2"-12 x 4.500	4 1/4"-12 x 4.500	4 1/4"-12 x 8.250	5.249	4.125	1.000	3.875	1 1/8"-12	12.625	2	-32	1.250	3.688	3.688	1.094	1.656	12.125	8.500	11.750	5.291	3.775	---	1.125	2.937	4.750
	5.000	3 1/2"-12 x 5.000	5"-12 x 5.000	4 3/4"-12 x 5.000	4 3/4"-12 x 9.000	5.749			4.250																	3.187	5.000
	5.500	4"-12 x 5.500	5 1/2"-12 x 5.500	5 1/4"-12 x 5.500	5 1/4"-12 x 10.000	6.249			4.625																	3.187	5.000
	6.000	4 1/2"-12 x 6.000	6"-12 x 6.000	5 3/4"-12 x 6.000	5 3/4"-12 x 10.000	6.749			5.125																	3.437	5.250
	7.000	5"-12 x 7.000	7"-12 x 7.000	6 1/2"-12 x 7.000	6 1/2"-12 x 10.000	7.749			6.000																	3.437	5.250
12.000	5.500	4"-12 x 5.500	5 1/2"-12 x 5.500	5 1/4"-12 x 5.500	5 1/4"-12 x 10.000	6.249	4.500	1.000	4.625	1 1/4"-12	14.875	2 1/2	-32	1.500	4.438	4.438	1.188	1.844	14.500	10.125	14.000	6.270	4.555	---	1.250	3.187	5.375
	6.000	4 1/2"-12 x 6.000	6"-12 x 6.000	5 3/4"-12 x 6.000	5 3/4"-12 x 10.000	6.749			5.125																	3.437	5.625
	7.000	5"-12 x 7.000	7"-12 x 7.000	6 1/2"-12 x 7.000	6 1/2"-12 x 10.000	7.749			6.000																	3.437	5.625
	8.000	5 3/4"-12 x 8.000	8"-12 x 8.000	7 1/2"-12 x 8.000	7 1/2"-12 x 12.000	8.749			7.000																	3.437	5.625
14.000	7.000	5"-12 x 7.000	7"-12 x 7.000	6 1/2"-12 x 7.000	6 1/2"-12 x 10.000	7.749	4.500	1.000	6.000	1 1/4"-12	17.125	3	-32	1.938	4.875	4.875	1.188	1.844	15.625	10.875	16.000	7.485	6.143	4.409	1.250	3.437	5.625
	8.000	5 3/4"-12 x 8.000	8"-12 x 8.000	7 1/2"-12 x 8.000	7 1/2"-12 x 12.000	8.749			7.000																		
	9.000	6 1/2"-12 x 9.000	9"-12 x 9.000	8 1/2"-12 x 9.000	8 1/2"-12 x 13.500	9.749			7.875																		
	10.000	7 1/4"-12 x 10.000	10"-12 x 10.000	9 1/2"-12 x 10.000	9 1/2"-12 x 15.000	10.749			8.625																		
BORE	MM	KM & KF	KD	KI	KA	B	BB	C	D	DD	E	EE	ES	F	G	J	K	KN	LB	P	OD	RA	RB	RC	TR	WB	Y

FILE: 3.12_HP12L2.dwg REV: 02/09/2010

27650 Groesbeck Hwy Roseville, MI 48066-2759 Phone 586.775.7211 ∘ Fax 586.775.4545 Toll Free 800.526.7968 e-mail: sales@peninsularcylinders.com www.peninsularcylinders.com

END LUGS

Heavy Duty Hydraulic Cylinder

Peninsular Mounting Style: **HP 14**

•3000 P.S.I. Working Pressure •5000 P.S.I. Rated Pressure

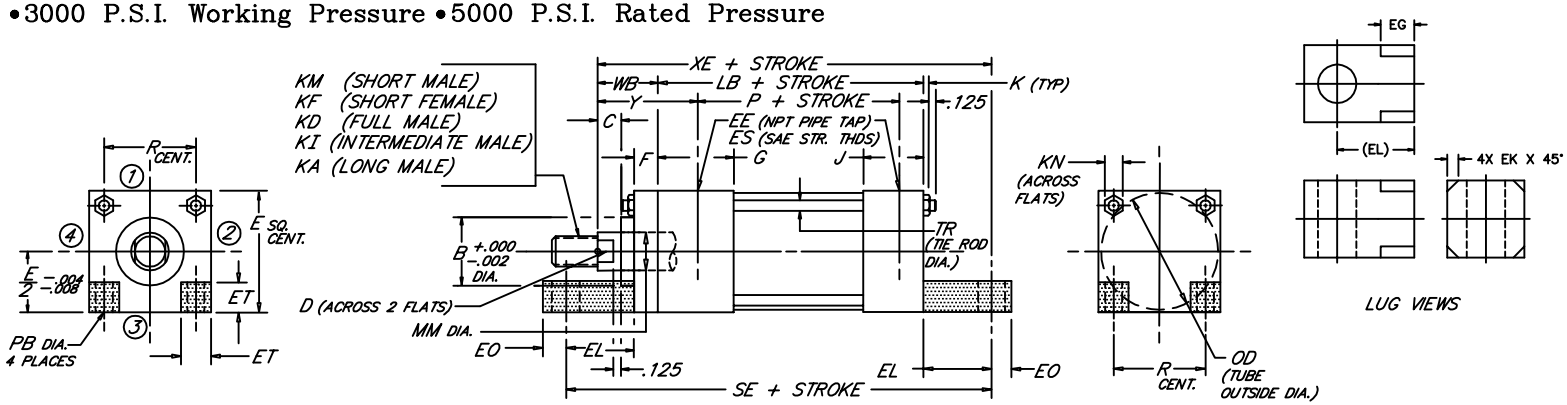

BORE	ROD MM	ROD THREAD X LENGTH KM & KF	KD	KI	KA	B	C	D	E	NPT EE	EG	EK	EL	EO	SAE ES	ET	F	G	J	K	KN	LB	OD	P	PB	R	SE	TR	WB	XE	Y
1.500	.625	7/16"-20 x .750	5/8"-18 x .750	1/2"-20 x .750	1/2"-20 x 1.125	1.124	.375	.500	2.500	1/2	.380	.060	.875	.375	-8	.875	.375	1.750	1.500	.406	.562	4.625	1.875	2.875	.438	1.625	6.750	.375	1.000	6.500	2.000
	1.000	3/4"-16 x 1.125	1"-14 x 1.125	7/8"-14 x 1.125	7/8"-14 x 1.875	1.499	.500	.875			.620	.380																	1.375	6.875	2.375
2.000	1.000	3/4"-16 x 1.125	1"-14 x 1.125	7/8"-14 x 1.125	7/8"-14 x 1.875	1.499	.500	.875	3.000	1/2	---	---	.9375	.500	-8	.938	.625	1.750	1.500	.531	.750	4.625	2.375	2.875	.562	2.050	7.125	.500	1.375	6.9375	2.375
	1.375	1"-14 x 1.625	1 3/8"-12 x 1.625	1 1/4"-12 x 1.625	1 1/4"-12 x 2.500	1.999	.625	1.125			.500	.310																	1.625	7.1875	2.625
2.500	1.000	3/4"-16 x 1.125	1"-14 x 1.125	7/8"-14 x 1.125	7/8"-14 x 1.875	1.499	.500	.875	3.500	1/2	---	---	.9375	.500	-8	.938	.625	1.750	1.500	.531	.750	4.750	3.000	3.000	.562	2.550	7.250	.500	1.375	7.0625	2.375
	1.375	1"-14 x 1.625	1 3/8"-12 x 1.625	1 1/4"-12 x 1.625	1 1/4"-12 x 2.500	1.999	.625	1.125			---	---																	1.625	7.3125	2.625
	1.750	1 1/4"-12 x 2.000	1 3/4"-12 x 2.000	1 1/2"-12 x 2.000	1 1/2"-12 x 3.000	2.374	.750	1.500			.620	.060																	1.875	7.5625	2.875
3.250	1.375	1"-14 x 1.625	1 3/8"-12 x 1.625	1 1/4"-12 x 1.625	1 1/4"-12 x 2.500	1.999	.625	1.125	4.500	3/4	---	---	1.125	.625	-12	1.250	.750	2.000	1.750	.656	.938	5.500	3.875	3.500	.688	3.250	8.500	.625	1.625	8.250	2.750
	1.750	1 1/4"-12 x 2.000	1 3/4"-12 x 2.000	1 1/2"-12 x 2.000	1 1/2"-12 x 3.000	2.374	.750	1.500																					1.875	8.500	3.000
	2.000	1 1/2"-12 x 2.250	2"-12 x 2.250	1 3/4"-12 x 2.250	1 3/4"-12 x 3.500	2.624	.875	1.688																					2.000	8.625	3.125
4.000	1.750	1 1/4"-12 x 2.000	1 3/4"-12 x 2.000	1 1/2"-12 x 2.000	1 1/2"-12 x 3.000	2.374	.750	1.500	5.000	3/4	---	---	1.125	.625	-12	1.188	.875	2.000	1.750	.656	.938	5.750	4.750	3.750	.688	3.820	8.875	.625	1.875	8.750	3.000
	2.000	1 1/2"-12 x 2.250	2"-12 x 2.250	1 3/4"-12 x 2.250	1 3/4"-12 x 3.500	2.624	.875	1.688																					2.000	8.875	3.125
	2.500	1 7/8"-12 x 3.000	2 1/2"-12 x 3.000	2 1/4"-12 x 3.000	2 1/4"-12 x 4.500	3.124	1.000	2.062																					2.250	9.125	3.375
5.000	2.000	1 1/2"-12 x 2.250	2"-12 x 2.250	1 3/4"-12 x 2.250	1 3/4"-12 x 3.500	2.624	.875	1.688	6.500	3/4	---	---	1.500	.750	-12	1.562	.875	2.000	1.750	.875	1.312	6.250	6.000	4.250	.938	4.950	10.125	.875	2.000	9.750	3.125
	2.500	1 7/8"-12 x 3.000	2 1/2"-12 x 3.000	2 1/4"-12 x 3.000	2 1/4"-12 x 4.500	3.124	1.000	2.062																					2.250	10.000	3.375
	3.000	2 1/4"-12 x 3.500	3"-12 x 3.500	2 3/4"-12 x 3.500	2 3/4"-12 x 5.500	3.749	1.000	2.625																					2.250	10.000	3.375
	3.500	2 1/2"-12 x 3.500	3 1/2"-12 x 3.500	3 1/4"-12 x 3.500	3 1/4"-12 x 6.500	4.249	1.000	3.000																					2.250	10.000	3.375
6.000	2.500	1 7/8"-12 x 3.000	2 1/2"-12 x 3.000	2 1/4"-12 x 3.000	2 1/4"-12 x 4.500	3.124	1.000	2.062	7.500	1	---	---	1.6875	.875	-16	1.750	1.000	2.250	2.250	1.000	1.500	7.375	7.000	4.875	1.062	5.730	11.750	1.000	2.250	11.3125	3.500
	3.000	2 1/4"-12 x 3.500	3"-12 x 3.500	2 3/4"-12 x 3.500	2 3/4"-12 x 5.500	3.749		2.625																							
	3.500	2 1/2"-12 x 3.500	3 1/2"-12 x 3.500	3 1/4"-12 x 3.500	3 1/4"-12 x 6.500	4.249		3.000																							
	4.000	3"-12 x 4.000	4"-12 x 4.000	3 3/4"-12 x 4.000	3 3/4"-12 x 7.500	4.749		3.375																							
BORE	MM	KM & KF	KD	KI	KA	B	C	D	E	EE	EG	EK	EL	EO	ES	ET	F	G	J	K	KN	LB	OD	P	PB	R	SE	TR	WB	XE	Y

FILE: 3.14_HP14S2.dwg REV: 02/09/2010

27650 Groesbeck Hwy Roseville, MI 48066-2759 Phone 586.775.7211 • Fax 586.775.4545 Toll Free 800.526.7968 e-mail: sales@peninsularcylinders.com www.peninsularcylinders.com

CENTERLINE LUGS

Heavy Duty Hydraulic Cylinder

Peninsular Mounting Style: **HP 15**

• 3000 P.S.I. Working Pressure • 5000 P.S.I. Rated Pressure

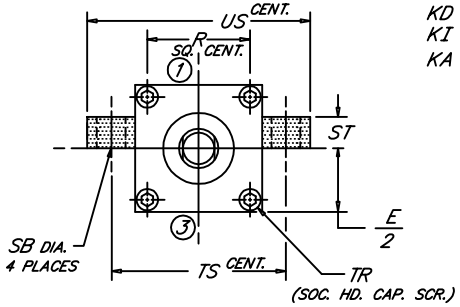

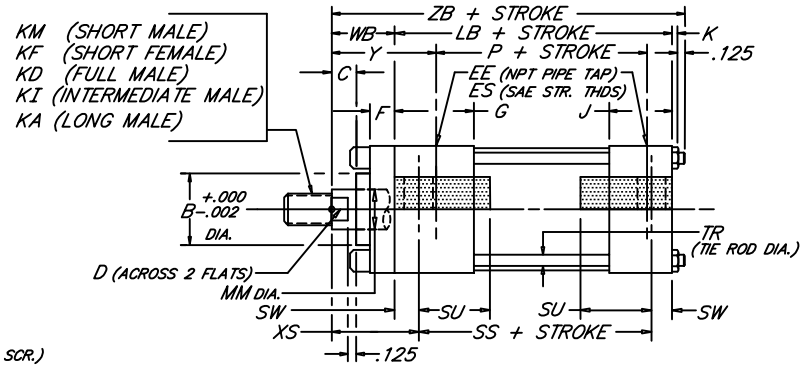

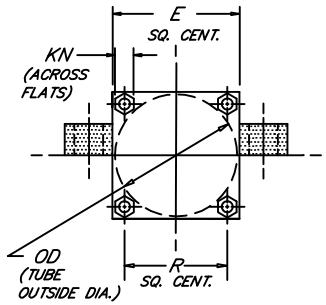

BORE	ROD MM	ROD THREAD X LENGTH KM & KF	KD	KI	KA	B	C	D	E	NPT EE	SAE ES	F	G	J	K	KN	LB	OD	P	R	SB	SS	ST	SU	SW	TR	TS	US	WB	XS	Y	ZB
1.500	.625	7/16"-20 x .750	5/8"-18 x .750	1/2"-20 x .750	1/2"-20 x 1.125	1.124	.375	.500	2.500	1/2	-8	.375	1.750	1.500	.406	.562	4.625	1.875	2.875	1.625	.438	3.875	.500	.938	.375	.375	3.250	4.000	1.000	1.375	2.000	6.156
	1.000	3/4"-16 x 1.125	1"-14 x 1.125	7/8"-14 x 1.125	7/8"-14 x 1.875	1.499	.500	.875																					1.375	1.750	2.375	6.531
2.000	1.000	3/4"-16 x 1.125	1"-14 x 1.125	7/8"-14 x 1.125	7/8"-14 x 1.875	1.499	.500	.875	3.000	1/2	-8	.625	1.750	1.500	.531	.750	4.625	2.375	2.875	2.050	.562	3.625	.750	1.250	.500	.500	4.000	5.000	1.375	1.875	2.375	6.656
	1.375	1"-14 x 1.625	1 3/8"-12 x 1.625	1 1/4"-12 x 1.625	1 1/4"-12 x 2.500	1.999	.625	1.125																					1.625	2.125	2.625	6.906
2.500	1.000	3/4"-16 x 1.125	1"-14 x 1.125	7/8"-14 x 1.125	7/8"-14 x 1.875	1.499	.500	.875																					1.375	2.062	2.375	6.781
	1.375	1"-14 x 1.625	1 3/8"-12 x 1.625	1 1/4"-12 x 1.625	1 1/4"-12 x 2.500	1.999	.625	1.125	3.500	1/2	-8	.625	1.750	1.500	.531	.750	4.750	3.000	3.000	2.550	.812	3.375	1.000	1.562	.6875	.500	4.875	6.250	1.625	2.312	2.625	7.031
	1.750	1 1/4"-12 x 2.000	1 3/4"-12 x 2.000	1 1/2"-12 x 2.000	1 1/2"-12 x 3.000	2.374	.750	1.500																					1.875	2.562	2.875	7.281
3.250	1.375	1"-14 x 1.625	1 3/8"-12 x 1.625	1 1/4"-12 x 1.625	1 1/4"-12 x 2.500	1.999	.625	1.125																					1.625	2.312	2.750	7.906
	1.750	1 1/4"-12 x 2.000	1 3/4"-12 x 2.000	1 1/2"-12 x 2.000	1 1/2"-12 x 3.000	2.374	.750	1.500	4.500	3/4	-12	.750	2.000	1.750	.656	.938	5.500	3.875	3.500	3.250	.812	4.125	1.000	1.562	.6875	.625	5.875	7.250	1.875	2.562	3.000	8.156
	2.000	1 1/2"-12 x 2.250	2"-12 x 2.250	1 3/4"-12 x 2.250	1 3/4"-12 x 3.500	2.624	.875	1.688																					2.000	2.687	3.125	8.281
4.000	1.750	1 1/4"-12 x 2.000	1 3/4"-12 x 2.000	1 1/2"-12 x 2.000	1 1/2"-12 x 3.000	2.374	.750	1.500																					1.875	2.750	3.000	8.406
	2.000	1 1/2"-12 x 2.250	2"-12 x 2.250	1 3/4"-12 x 2.250	1 3/4"-12 x 3.500	2.624	.875	1.688	5.000	3/4	-12	.875	2.000	1.750	.656	.938	5.750	4.750	3.750	3.820	1.062	4.000	1.250	2.000	.875	.625	6.750	8.500	2.000	2.875	3.125	8.531
	2.500	1 7/8"-12 x 3.000	2 1/2"-12 x 3.000	2 1/4"-12 x 3.000	2 1/4"-12 x 4.500	3.124	1.000	2.062																					2.250	3.125	3.375	8.781
5.000	2.000	1 1/2"-12 x 2.250	2"-12 x 2.250	1 3/4"-12 x 2.250	1 3/4"-12 x 3.500	2.624	.875	1.688																					2.000	2.875	3.125	9.250
	2.500	1 7/8"-12 x 3.000	2 1/2"-12 x 3.000	2 1/4"-12 x 3.000	2 1/4"-12 x 4.500	3.124	1.000	2.062	6.500	3/4	-12	.875	2.000	1.750	.875	1.312	6.250	6.000	4.250	4.950	1.062	4.500	1.250	2.000	.875	.875	8.250	10.000	2.250	3.125	3.375	9.500
	3.000	2 1/4"-12 x 3.500	3"-12 x 3.500	2 3/4"-12 x 3.500	2 3/4"-12 x 5.500	3.749	1.000	2.625																					2.250	3.125	3.375	9.500
	3.500	2 1/2"-12 x 3.500	3 1/2"-12 x 3.500	3 1/4"-12 x 3.500	3 1/4"-12 x 6.500	4.249	1.000	3.000																					2.250	3.125	3.375	9.500
6.000	2.500	1 7/8"-12 x 3.000	2 1/2"-12 x 3.000	2 1/4"-12 x 3.000	2 1/4"-12 x 4.500	3.124		2.062																								
	3.000	2 1/4"-12 x 3.500	3"-12 x 3.500	2 3/4"-12 x 3.500	2 3/4"-12 x 5.500	3.749	1.000	2.625	7.500	1	-16	1.000	2.250	2.250	1.000	1.500	7.375	7.000	4.875	5.730	1.312	5.125	1.500	2.500	1.125	1.000	9.750	12.000	2.250	3.375	3.500	10.750
	3.500	2 1/2"-12 x 3.500	3 1/2"-12 x 3.500	3 1/4"-12 x 3.500	3 1/4"-12 x 6.500	4.249		3.000																								
	4.000	3"-12 x 4.000	4"-12 x 4.000	3 3/4"-12 x 4.000	3 3/4"-12 x 7.500	4.749		3.375																								
BORE	MM	KM & KF	KD	KI	KA	B	C	D	E	EE	ES	F	G	J	K	KN	LB	OD	P	R	SB	SS	ST	SU	SW	TR	TS	US	WB	XS	Y	ZB

FILE: 3.15_HP15S2.dwg REV: 02/09/2010

27650 Groesbeck Hwy Roseville, MI 48066-2759 Phone 586.775.7211 • Fax 586.775.4545 Toll Free 800.526.7968 e-mail: sales@peninsularcylinders.com www.peninsularcylinders.com

CENTERLINE LUGS

Heavy Duty Hydraulic Cylinder • 3000 P.S.I. Working Pressure • 5000 P.S.I. Rated Pressure

Peninsular Mounting Style: **HP 15**

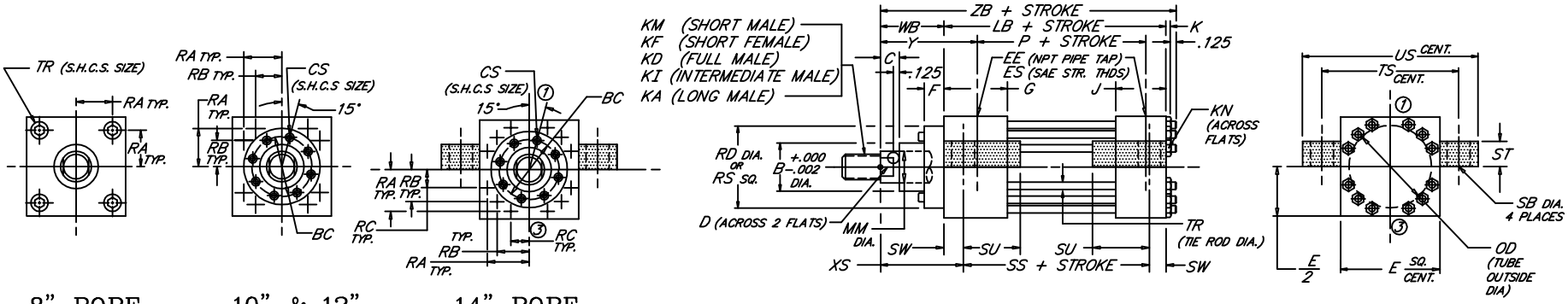

8" BORE 10" & 12" BORES 14" BORE

BORE	ROD MM	ROD THREAD X LENGTH KM & KF	KD	KI	KA	B	BC	C	CS	D	E	NPT EE	SAE ES	F	G	J	K	KN	LB	P	OD	RA	RB	RC	RD	RS	SB	SS	ST	SU	SW	TR	TS	US	WB	XS	Y	ZB
8.000	3.500	2 1/2"-12 x 3.500	3 1/2"-12 x 3.500	3 1/4"-12 x 3.500	3 1/4"-12 x 6.500	4.249				3.000																											
	4.000	3"-12 x 4.000	4"-12 x 4.000	3 3/4"-12 x 4.000	3 3/4"-12 x 7.500	4.749				3.375																											
	4.500	3 1/4"-12 x 4.500	4 1/2"-12 x 4.500	4 1/4"-12 x 4.500	4 1/4"-12 x 8.250	5.249	---	1.000	---	3.875	9.500	1 1/2	-24	1.000	3.000	3.000	1.188	1.844	9.500	6.125	9.250	3.750	---	---	---	9.500	1.562	6.750	1.750	2.875	1.375	1.250	12.250	15.000	2.250	3.625	3.938	13.063
	5.000	3 1/2"-12 x 5.000	5"-12 x 5.000	4 3/4"-12 x 5.000	4 3/4"-12 x 9.000	5.749				4.250																											
	5.500	4"-12 x 5.500	5 1/2"-12 x 5.500	5 1/4"-12 x 5.500	5 1/4"-12 x 10.000	6.249				4.625																											
10.000	4.500	3 1/4"-12 x 4.500	4 1/2"-12 x 4.500	4 1/4"-12 x 4.500	4 1/4"-12 x 8.250	5.249	6.375		.500	3.875				.500											7.260									2.937	4.562	4.750	16.281
	5.000	3 1/2"-12 x 5.000	5"-12 x 5.000	4 3/4"-12 x 5.000	4 3/4"-12 x 9.000	5.749	6.875		.500	4.250				.500											7.750									3.187	4.812	5.000	16.531
	5.500	4"-12 x 5.500	5 1/2"-12 x 5.500	5 1/4"-12 x 5.500	5 1/4"-12 x 10.000	6.249	7.375	1.000	.500	4.625	12.625	2	-32	.500	3.688	3.688	1.094	1.656	12.125	8.500	11.750	5.291	3.775	---	8.260	---	1.562	8.875	2.250	3.500	1.625	1.125	15.875	19.125	3.187	4.812	5.000	16.531
	6.000	4 1/2"-12 x 6.000	6"-12 x 6.000	5 3/4"-12 x 6.000	5 3/4"-12 x 10.000	6.749	8.500		.625	5.125				.875											10.000									3.437	5.062	5.250	16.781
	7.000	5"-12 x 7.000	7"-12 x 7.000	6 1/2"-12 x 7.000	6 1/2"-12 x 10.000	7.749	9.437		.625	6.000				.875											10.500									3.437	5.062	5.250	16.781
12.000	5.500	4"-12 x 5.500	5 1/2"-12 x 5.500	5 1/4"-12 x 5.500	5 1/4"-12 x 10.000	6.249	7.375	1.000	.500	4.625	14.875	2 1/2	-32	.500	4.438	4.438	1.188	1.844	14.500	10.125	14.000	6.270	4.555	---	8.260	---	1.562	10.500	3.000	4.250	2.000	1.250	18.875	22.875	3.187	5.187	5.375	19.000
	6.000	4 1/2"-12 x 6.000	6"-12 x 6.000	5 3/4"-12 x 6.000	5 3/4"-12 x 10.000	6.749	8.500		.625	5.125				.875											10.000									3.437	5.437	5.625	19.250
	7.000	5"-12 x 7.000	7"-12 x 7.000	6 1/2"-12 x 7.000	6 1/2"-12 x 10.000	7.749	9.437		.625	6.000				.875											10.500									3.437	5.437	5.625	19.250
	8.000	5 3/4"-12 x 8.000	8"-12 x 8.000	7 1/2"-12 x 8.000	7 1/2"-12 x 12.000	8.749	10.500		.625	7.000				.875											12.000									3.437	5.437	5.625	19.250
14.000	7.000	5"-12 x 7.000	7"-12 x 7.000	6 1/2"-12 x 7.000	6 1/2"-12 x 10.000	7.749	9.437	1.000	.625	6.000	17.125	3	-32	.875	4.875	4.875	1.188	1.844	15.625	10.875	16.000	7.485	6.143	4.409	10.500	---	2.312	11.125	4.000	4.750	2.250	1.250	21.625	26.125	3.437	5.687	5.625	20.375
	8.000	5 3/4"-12 x 8.000	8"-12 x 8.000	7 1/2"-12 x 8.000	7 1/2"-12 x 12.000	8.749	10.500			7.000															12.000												
	9.000	6 1/2"-12 x 9.000	9"-12 x 9.000	8 1/2"-12 x 9.000	8 1/2"-12 x 13.500	9.749	11.500			7.875															13.000												
	10.000	7 1/4"-12 x 10.000	10"-12 x 10.000	9 1/2"-12 x 10.000	9 1/2"-12 x 15.000	10.749	12.500			8.625															14.000												
BORE	MM	KM & KF	KD	KI	KA	B	BC	C	CS	D	E	EE	ES	F	G	J	K	KN	LB	P	OD	RA	RB	RC	RD	RS	SB	SS	ST	SU	SW	TR	TS	US	WB	XS	Y	ZB

FILE: 3.15_HP15L2.dwg REV: 02/09/2010

27650 Groesbeck Hwy Roseville, MI 48066-2759 Phone 586.775.7211 • Fax 586.775.4545 Toll Free 800.526.7968 e-mail: sales@peninsularcylinders.com www.peninsularcylinders.com

SIDE TAPPED

Peninsular Mounting Style: **HP 16**

Heavy Duty Hydraulic Cylinder • 3000 P.S.I. Working Pressure • 5000 P.S.I. Rated Pressure

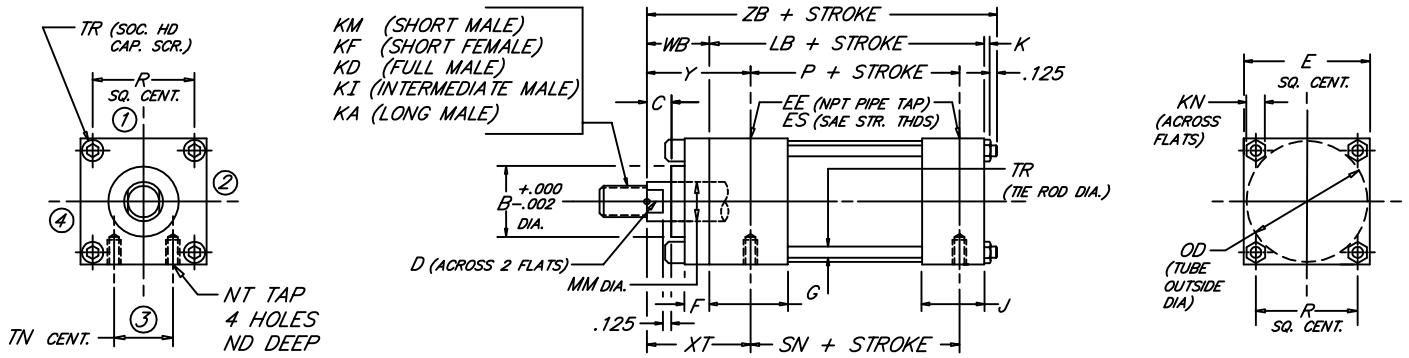

BORE	ROD MM	ROD THREAD X LENGTH KM & KF	KD	KI	KA	B	C	D	E	NPT EE	SAE ES	F	G	J	K	KN	LB	ND	NT	OD	P	R	SN	TN	TR	WB	XT	Y	ZB
1.500	.625	7/16"-20 x .750	5/8"-18 x .750	1/2"-20 x .750	1/2"-20 x 1.125	1.124	.375	.500	2.500	1/2	-8	.375	1.750	1.500	.406	.562	4.625	.375	3/8"-16	1.875	2.875	1.625	2.875	.750	.375	1.000	2.000	2.000	6.156
	1.000	3/4"-16 x 1.125	1"-14 x 1.125	7/8"-14 x 1.125	7/8"-14 x 1.875	1.499	.500	.875																		1.375	2.375	2.375	6.531
2.000	1.000	3/4"-16 x 1.125	1"-14 x 1.125	7/8"-14 x 1.125	7/8"-14 x 1.875	1.499	.500	.875	3.000	1/2	-8	.625	1.750	1.500	.531	.750	4.625	.375	1/2"-13	2.375	2.875	2.050	2.875	.938	.500	1.375	2.375	2.375	6.656
	1.375	1"-14 x 1.625	1 3/8"-12 x 1.625	1 1/4"-12 x 1.625	1 1/4"-12 x 2.500	1.999	.625	1.125																		1.625	2.625	2.625	6.906
2.500	1.000	3/4"-16 x 1.125	1"-14 x 1.125	7/8"-14 x 1.125	7/8"-14 x 1.875	1.499	.500	.875	3.500	1/2	-8	.625	1.750	1.500	.531	.750	4.750	.500	5/8"-11	3.000	3.000	2.550	3.000	1.312	.500	1.375	2.375	2.375	6.781
	1.375	1"-14 x 1.625	1 3/8"-12 x 1.625	1 1/4"-12 x 1.625	1 1/4"-12 x 2.500	1.999	.625	1.125																		1.625	2.625	2.625	7.031
	1.750	1 1/4"-12 x 2.000	1 3/4"-12 x 2.000	1 1/2"-12 x 2.000	1 1/2"-12 x 3.000	2.374	.750	1.500																		1.875	2.875	2.875	7.281
3.250	1.375	1"-14 x 1.625	1 3/8"-12 x 1.625	1 1/4"-12 x 1.625	1 1/4"-12 x 2.500	1.999	.625	1.125	4.500	3/4	-12	.750	2.000	1.750	.656	.938	5.500	.750	3/4"-10	3.875	3.500	3.250	3.500	1.500	.625	1.625	2.750	2.750	7.906
	1.750	1 1/4"-12 x 2.000	1 3/4"-12 x 2.000	1 1/2"-12 x 2.000	1 1/2"-12 x 3.000	2.374	.750	1.500																		1.875	3.000	3.000	8.156
	2.000	1 1/2"-12 x 2.250	2"-12 x 2.250	1 3/4"-12 x 2.250	1 3/4"-12 x 3.500	2.624	.875	1.688																		2.000	3.125	3.125	8.281
4.000	1.750	1 1/4"-12 x 2.000	1 3/4"-12 x 2.000	1 1/2"-12 x 2.000	1 1/2"-12 x 3.000	2.374	.750	1.500	5.000	3/4	-12	.875	2.000	1.750	.656	.938	5.750	.750	1"-8	4.750	3.750	3.820	3.750	2.062	.625	1.875	3.000	3.000	8.406
	2.000	1 1/2"-12 x 2.250	2"-12 x 2.250	1 3/4"-12 x 2.250	1 3/4"-12 x 3.500	2.624	.875	1.688																		2.000	3.125	3.125	8.531
	2.500	1 7/8"-12 x 3.000	2 1/2"-12 x 3.000	2 1/4"-12 x 3.000	2 1/4"-12 x 4.500	3.124	1.000	2.062																		2.250	3.375	3.375	8.781
5.000	2.000	1 1/2"-12 x 2.250	2"-12 x 2.250	1 3/4"-12 x 2.250	1 3/4"-12 x 3.500	2.624	.875	1.688	6.500	3/4	-12	.875	2.000	1.750	.875	1.312	6.250	1.000	1"-8	6.000	4.250	4.950	4.250	2.938	.875	2.000	3.125	3.125	9.250
	2.500	1 7/8"-12 x 3.000	2 1/2"-12 x 3.000	2 1/4"-12 x 3.000	2 1/4"-12 x 4.500	3.124	1.000	2.062																		2.250	3.375	3.375	9.500
	3.000	2 1/4"-12 x 3.500	3"-12 x 3.500	2 3/4"-12 x 3.500	2 3/4"-12 x 5.500	3.749	1.000	2.625																		2.250	3.375	3.375	9.500
	3.500	2 1/2"-12 x 3.500	3 1/2"-12 x 3.500	3 1/4"-12 x 3.500	3 1/4"-12 x 6.500	4.249	1.000	3.000																		2.250	3.375	3.375	9.500
6.000	2.500	1 7/8"-12 x 3.000	2 1/2"-12 x 3.000	2 1/4"-12 x 3.000	2 1/4"-12 x 4.500	3.124	1.000	2.062	7.500	1	-16	1.000	2.250	2.250	1.000	1.500	7.375	1.125	1 1/4"-7	7.000	4.875	5.730	5.125	3.312	1.000	2.250	3.500	3.500	10.750
	3.000	2 1/4"-12 x 3.500	3"-12 x 3.500	2 3/4"-12 x 3.500	2 3/4"-12 x 5.500	3.749		2.625																					
	3.500	2 1/2"-12 x 3.500	3 1/2"-12 x 3.500	3 1/4"-12 x 3.500	3 1/4"-12 x 6.500	4.249		3.000																					
	4.000	3"-12 x 4.000	4"-12 x 4.000	3 3/4"-12 x 4.000	3 3/4"-12 x 7.500	4.749		3.375																					
BORE	MM	KM & KF	KD	KI	KA	B	C	D	E	EE	ES	F	G	J	K	KN	LB	ND	NT	OD	P	R	SN	TN	TR	WB	XT	Y	ZB

FILE: 3.16_HP16S2.dwg REV: 02/09/2010

27650 Groesbeck Hwy Roseville, MI 48066-2759 Phone 586.775.7211 • Fax 586.775.4545 Toll Free 800.526.7968 e-mail: sales@peninsularcylinders.com www.peninsularcylinders.com

HEAD SQUARE FLANGE

Peninsular Mounting Style: **HP 17**

Heavy Duty Hydraulic Cylinder

•3000 P.S.I. Working Pressure •5000 P.S.I. Rated Pressure

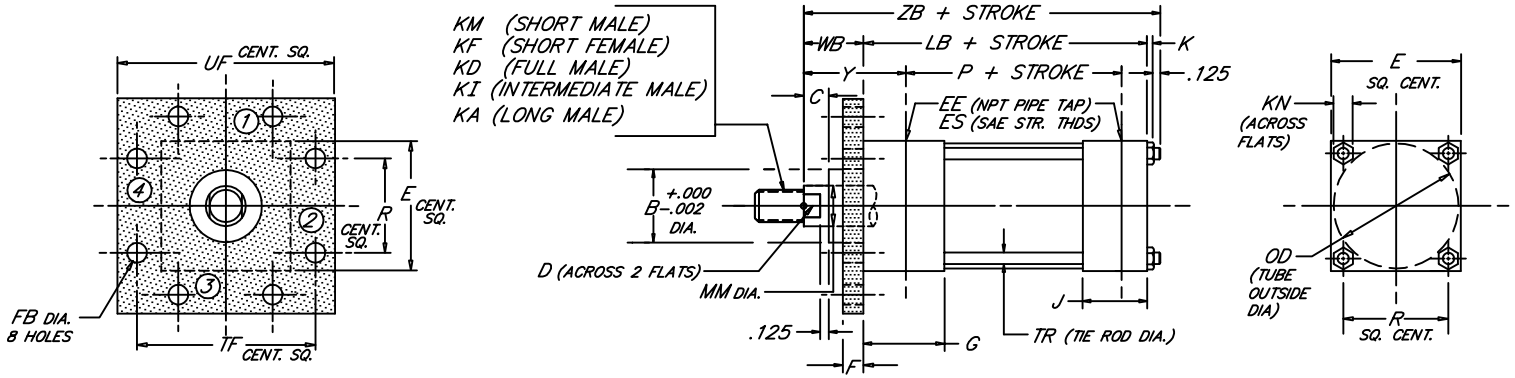

BORE	ROD MM	ROD THREAD X LENGTH KM & KF	KD	KI	KA	B	C	D	E	NPT EE	SAE ES	F	FB	G	J	K	KN	LB	OD	P	R	TF	TR	UF	WB	Y	ZB
1.500	.625	7/16"-20 x .750	5/8"-18 x .750	1/2"-20 x .750	1/2"-20 x 1.125	1.124	.375	.500	2.500	1/2	-8	.375	.437	1.750	1.500	.406	.562	4.625	1.875	2.875	1.625	3.438	.375	4.250	1.000	2.000	6.156
	1.000	3/4"-16 x 1.125	1"-14 x 1.125	7/8"-14 x 1.125	7/8"-14 x 1.875	1.499	.500	.875																	1.375	2.375	6.531
2.000	1.000	3/4"-16 x 1.125	1"-14 x 1.125	7/8"-14 x 1.125	7/8"-14 x 1.875	1.499	.500	.875	3.000	1/2	-8	.625	.562	1.750	1.500	.531	.750	4.625	2.375	2.875	2.050	4.125	.500	5.125	1.375	2.375	6.656
	1.375	1"-14 x 1.625	1 3/8"-12 x 1.625	1 1/4"-12 x 1.625	1 1/4"-12 x 2.500	1.999	.625	1.125																	1.625	2.625	6.906
2.500	1.000	3/4"-16 x 1.125	1"-14 x 1.125	7/8"-14 x 1.125	7/8"-14 x 1.875	1.499	.500	.875	3.500	1/2	-8	.625	.562	1.750	1.500	.531	.750	4.750	3.000	3.000	2.550	4.625	.500	5.625	1.375	2.375	6.781
	1.375	1"-14 x 1.625	1 3/8"-12 x 1.625	1 1/4"-12 x 1.625	1 1/4"-12 x 2.500	1.999	.625	1.125																	1.625	2.625	7.031
	1.750	1 1/4"-12 x 2.000	1 3/4"-12 x 2.000	1 1/2"-12 x 2.000	1 1/2"-12 x 3.000	2.374	.750	1.500																	1.875	2.875	7.281
3.250	1.375	1"-14 x 1.625	1 3/8"-12 x 1.625	1 1/4"-12 x 1.625	1 1/4"-12 x 2.500	1.999	.625	1.125	4.500	3/4	-12	.750	.687	2.000	1.750	.656	.938	5.500	3.875	3.500	3.250	5.875	.625	7.125	1.625	2.750	7.906
	1.750	1 1/4"-12 x 2.000	1 3/4"-12 x 2.000	1 1/2"-12 x 2.000	1 1/2"-12 x 3.000	2.374	.750	1.500																	1.875	3.000	8.156
	2.000	1 1/2"-12 x 2.250	2"-12 x 2.250	1 3/4"-12 x 2.250	1 3/4"-12 x 3.500	2.624	.875	1.688																	2.000	3.125	8.281
4.000	1.750	1 1/4"-12 x 2.000	1 3/4"-12 x 2.000	1 1/2"-12 x 2.000	1 1/2"-12 x 3.000	2.374	.750	1.500	5.000	3/4	-12	.875	.687	2.000	1.750	.656	.938	5.750	4.750	3.750	3.820	6.375	.625	7.625	1.875	3.000	8.406
	2.000	1 1/2"-12 x 2.250	2"-12 x 2.250	1 3/4"-12 x 2.250	1 3/4"-12 x 3.500	2.624	.875	1.688																	2.000	3.125	8.531
	2.500	1 7/8"-12 x 3.000	2 1/2"-12 x 3.000	2 1/4"-12 x 3.000	2 1/4"-12 x 4.500	3.124	1.000	2.062																	2.250	3.375	8.781
5.000	2.000	1 1/2"-12 x 2.250	2"-12 x 2.250	1 3/4"-12 x 2.250	1 3/4"-12 x 3.500	2.624	.875	1.688	6.500	3/4	-12	.875	.937	2.000	1.750	.875	1.312	6.250	6.000	4.250	4.950	8.188	.875	9.750	2.000	3.125	9.250
	2.500	1 7/8"-12 x 3.000	2 1/2"-12 x 3.000	2 1/4"-12 x 3.000	2 1/4"-12 x 4.500	3.124	1.000	2.062																	2.250	3.375	9.500
	3.000	2 1/4"-12 x 3.500	3"-12 x 3.500	2 3/4"-12 x 3.500	2 3/4"-12 x 5.500	3.749	1.000	2.625																	2.250	3.375	9.500
	3.500	2 1/2"-12 x 3.500	3 1/2"-12 x 3.500	3 1/4"-12 x 3.500	3 1/4"-12 x 6.500	4.249	1.000	3.000																	2.250	3.375	9.500
6.000	2.500	1 7/8"-12 x 3.000	2 1/2"-12 x 3.000	2 1/4"-12 x 3.000	2 1/4"-12 x 4.500	3.124	1.000	2.062	7.500	1	-16	1.000	1.062	2.250	2.250	1.000	1.500	7.375	7.000	4.875	5.730	9.438	1.000	11.250	2.250	3.500	10.750
	3.000	2 1/4"-12 x 3.500	3"-12 x 3.500	2 3/4"-12 x 3.500	2 3/4"-12 x 5.500	3.749		2.625																			
	3.500	2 1/2"-12 x 3.500	3 1/2"-12 x 3.500	3 1/4"-12 x 3.500	3 1/4"-12 x 6.500	4.249		3.000																			
	4.000	3"-12 x 4.000	4"-12 x 4.000	3 3/4"-12 x 4.000	3 3/4"-12 x 7.500	4.749		3.375																			
BORE	MM	KM & KF	KD	KI	KA	B	C	D	E	EE	ES	F	FB	G	J	K	KN	LB	OD	P	R	TF	TR	UF	WB	Y	ZB

FILE: 3.17_HP17S2.dwg REV: 02/09/2010

27650 Groesbeck Hwy Roseville, MI 48066-2759 Phone 586.775.7211 • Fax 586.775.4545 Toll Free 800.526.7968 e-mail: sales@peninsularcylinders.com www.peninsularcylinders.com

HEAD SQUARE FLANGE

Peninsular Mounting Style: **HP 17**

Heavy Duty Hydraulic Cylinder • 3000 P.S.I. Working Pressure • 5000 P.S.I. Rated Pressure

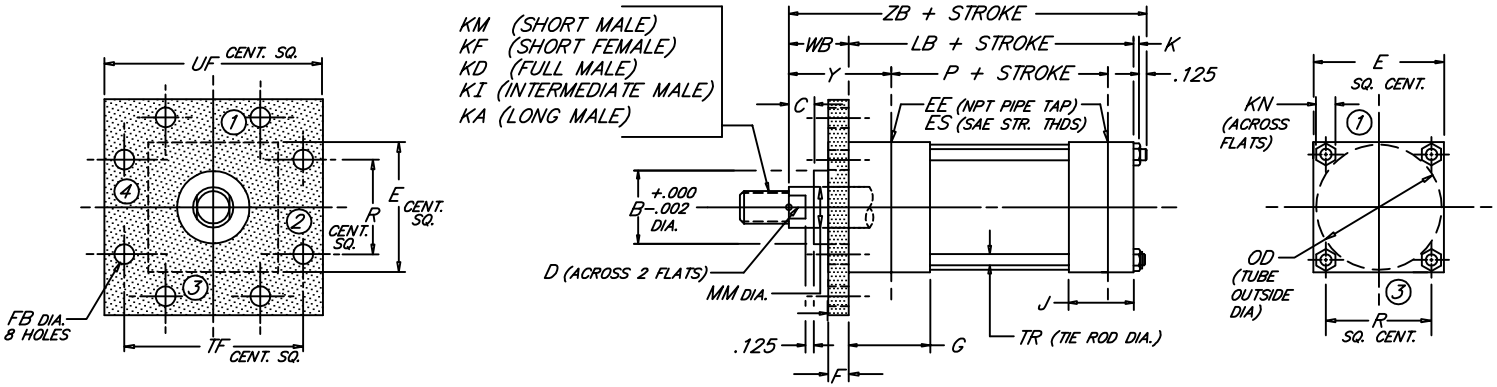

BORE	ROD MM	ROD THREAD X LENGTH KM & KF	KD	KI	KA	B	C	D	E	NPT EE	SAE ES	F	FB	G	J	K	KN	LB	OD	P	R	TF	TR	UF	WB	Y	ZB
	3.500	2 1/2"-12 x 3.500	3 1/2"-12 x 3.500	3 1/4"-12 x 3.500	3 1/4"-12 x 6.500	4.249		3.000																			
	4.000	3"-12 x 4.000	4"-12 x 4.000	3 3/4"-12 x 4.000	3 3/4"-12 x 7.500	4.749		3.375																			
8.000	4.500	3 1/4"-12 x 4.500	4 1/2"-12 x 4.500	4 1/4"-12 x 4.500	4 1/4"-12 x 8.250	5.249	1.000	3.875	9.500	1 1/2	-24	1.000	1.312	3.000	3.000	1.188	1.844	9.500	9.250	6.125	7.500	11.812	1.250	14.000	2.250	3.938	13.063
	5.000	3 1/2"-12 x 5.000	5"-12 x 5.000	4 3/4"-12 x 5.000	4 3/4"-12 x 9.000	5.749		4.250																			
	5.500	4"-12 x 5.500	5 1/2"-12 x 5.500	5 1/4"-12 x 5.500	5 1/4"-12 x 10.000	6.249		4.625																			
BORE	MM	KM & KF	KD	KI	KA	B	C	D	E	EE	ES	F	FB	G	J	K	KN	LB	OD	P	R	TF	TR	UF	WB	Y	ZB

FILE: 3.17_HP17L2.dwg REV: 02/09/2010

27650 Groesbeck Hwy Roseville, MI 48066-2759 Phone 586.775.7211 ∘ Fax 586.775.4545 Toll Free 800.526.7968 e-mail: sales@peninsularcylinders.com www.peninsularcylinders.com

CAP SQUARE FLANGE

Peninsular Mounting Style: **HP 18**

Heavy Duty Hydraulic Cylinder • 3000 P.S.I. Working Pressure • 5000 P.S.I. Rated Pressure

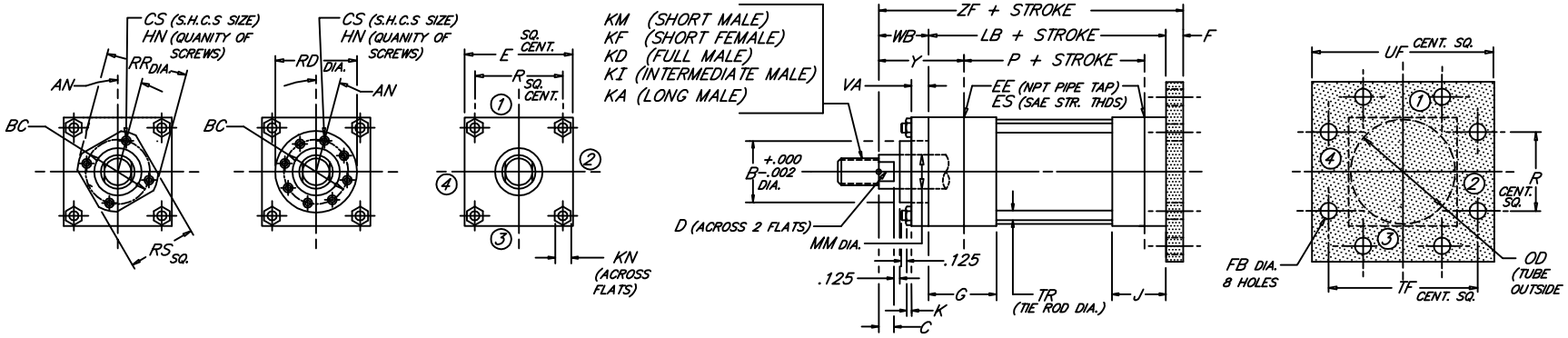

BORE	ROD MM	ROD THREAD X LENGTH KM & KF	KD	KI	KA	AN	B	BC	C	CS	D	E	NPT EE	SAE ES	F	FB	G	HN	J	K	KN	LB	OD	P	R	RD	RR	RS	TF	TR	UF	VA	WB	Y	ZF
1.500	.625	7/16"-20 x .750	5/8"-18 x .750	1/2"-20 x .750	1/2"-20 x 1.125	15°	1.124	1.750	.375	.250	.500	2.500	1/2	-8	.375	.437	1.750	4	1.500	.406	.562	4.625	1.875	2.875	1.625	---	2.125	1.625	3.438	.375	4.250	.250	1.000	2.000	6.000
	1.000	3/4"-16 x 1.125	1"-14 x 1.125	7/8"-14 x 1.125	7/8"-14 x 1.875	---	1.499	---	.500	---	.875							---								---	---	---				.375	1.375	2.375	6.375
2.000	1.000	3/4"-16 x 1.125	1"-14 x 1.125	7/8"-14 x 1.125	7/8"-14 x 1.875	15°	1.499	2.188	.500	.312	.875	3.000	1/2	-8	.625	.562	1.750	4	1.500	.531	.750	4.625	2.375	2.875	2.050	---	2.656	2.000	4.125	.500	5.125	.375	1.375	2.375	6.625
	1.375	1"-14 x 1.625	1 3/8"-12 x 1.625	1 1/4"-12 x 1.625	1 1/4"-12 x 2.500	---	1.999	---	.625	---	1.125							---								---	---	---				.625	1.625	2.625	6.875
2.500	1.000	3/4"-16 x 1.125	1"-14 x 1.125	7/8"-14 x 1.125	7/8"-14 x 1.875	15°	1.499	2.188	.500	.312	.875							4								---	2.656	2.000				.375	1.375	2.375	6.750
	1.375	1"-14 x 1.625	1 3/8"-12 x 1.625	1 1/4"-12 x 1.625	1 1/4"-12 x 2.500	15°	1.999	2.750	.625	.375	1.125	3.500	1/2	-8	.625	.562	1.750	4	1.500	.531	.750	4.750	3.000	3.000	2.550	---	3.320	2.500	4.625	.500	5.625	.375	1.625	2.625	7.000
	1.750	1 1/4"-12 x 2.000	1 3/4"-12 x 2.000	1 1/2"-12 x 2.000	1 1/2"-12 x 3.000	---	2.374	---	.750	---	1.500							---								---	---	---				.625	1.875	2.875	7.250
3.250	1.375	1"-14 x 1.625	1 3/8"-12 x 1.625	1 1/4"-12 x 1.625	1 1/4"-12 x 2.500	15°	1.999	2.750	.625	.375	1.125							4								---	3.320	2.500				.375	1.625	2.750	7.875
	1.750	1 1/4"-12 x 2.000	1 3/4"-12 x 2.000	1 1/2"-12 x 2.000	1 1/2"-12 x 3.000	15°	2.374	3.125	.750	.375	1.500	4.500	3/4	-12	.750	.687	2.000	4	1.750	.656	.938	5.500	3.875	3.500	3.250	---	3.760	2.760	5.875	.625	7.125	.375	1.875	3.000	8.125
	2.000	1 1/2"-12 x 2.250	2"-12 x 2.250	1 3/4"-12 x 2.250	1 3/4"-12 x 3.500	---	2.624	---	.875	---	1.688							---								---	---	---				.750	2.000	3.125	8.250
4.000	1.750	1 1/4"-12 x 2.000	1 3/4"-12 x 2.000	1 1/2"-12 x 2.000	1 1/2"-12 x 3.000	15°	2.374	3.125	.750	.375	1.500							4								---	3.760	2.760				.375	1.875	3.000	8.500
	2.000	1 1/2"-12 x 2.250	2"-12 x 2.250	1 3/4"-12 x 2.250	1 3/4"-12 x 3.500	30°	2.624	3.500	.875	.375	1.688	5.000	3/4	-12	.875	.687	2.000	6	1.750	.656	.938	5.750	4.750	3.750	3.820	4.260	---	---	6.375	.625	7.625	.375	2.000	3.125	8.625
	2.500	1 7/8"-12 x 3.000	2 1/2"-12 x 3.000	2 1/4"-12 x 3.000	2 1/4"-12 x 4.500	---	3.124	---	1.000	---	2.062							---								----	---	---				.875	2.250	3.375	8.875
5.000	2.000	1 1/2"-12 x 2.250	2"-12 x 2.250	1 3/4"-12 x 2.250	1 3/4"-12 x 3.500	15°	2.624	3.500	.875	.375	1.688							6								4.260	---	---				.375	2.000	3.125	9.125
	2.500	1 7/8"-12 x 3.000	2 1/2"-12 x 3.000	2 1/4"-12 x 3.000	2 1/4"-12 x 4.500	15°	3.124	4.000	1.000	.375	2.062	6.500	3/4	-12	.875	.937	2.000	6	1.750	.875	1.312	6.250	6.000	4.250	4.950	4.625	---	---	8.188	.875	9.750	.375	2.250	3.375	9.375
	3.000	2 1/4"-12 x 3.500	3"-12 x 3.500	2 3/4"-12 x 3.500	2 3/4"-12 x 5.500	15°	3.749	4.500	1.000	.375	2.625							6								5.125	---	---				.375	2.250	3.375	9.375
	3.500	2 1/2"-12 x 3.500	3 1/2"-12 x 3.500	3 1/4"-12 x 3.500	3 1/4"-12 x 6.500	---	4.249	---	1.000	---	3.000							---								---	---	---				.875	2.250	3.375	9.375
6.000	2.500	1 7/8"-12 x 3.000	2 1/2"-12 x 3.000	2 1/4"-12 x 3.000	2 1/4"-12 x 4.500	15°	3.124	4.000	1.000	.375	2.062	7.500	1	-16	1.000	1.062	2.250	6	2.250	1.000	1.500	7.375	7.000	4.875	5.730	4.625	---	---	9.438	1.000	11.250	.375	2.250	3.500	10.625
	3.000	2 1/4"-12 x 3.500	3"-12 x 3.500	2 3/4"-12 x 3.500	2 3/4"-12 x 5.500		3.749	4.500		.375	2.625							6								5.125	---	---				.375			
	3.500	2 1/2"-12 x 3.500	3 1/2"-12 x 3.500	3 1/4"-12 x 3.500	3 1/4"-12 x 6.500		4.249	5.000		.375	3.000							8								5.562	---	---				.375			
	4.000	3"-12 x 4.000	4"-12 x 4.000	3 3/4"-12 x 4.000	3 3/4"-12 x 7.500		4.749	5.625		.438	3.375							8								6.500	---	---				.500			
BORE	MM	KM & KF	KD	KI	KA	AN	B	BC	C	CS	D	E	EE	ES	F	FB	G	HN	J	K	KN	LB	OD	P	R	RD	RR	RS	TF	TR	UF	VA	WB	Y	ZF

3.18

FILE: 3.18_HP18S2.dwg REV: 02/09/2010

27650 Groesbeck Hwy Roseville, MI 48066-2759 Phone 586.775.7211 • Fax 586.775.4545 Toll Free 800.526.7968 e-mail: sales@peninsularcylinders.com www.peninsularcylinders.com

CAP SQUARE FLANGE

Peninsular Mounting Style: **HP 18**

Heavy Duty Hydraulic Cylinder • 3000 P.S.I. Working Pressure • 5000 P.S.I. Rated Pressure

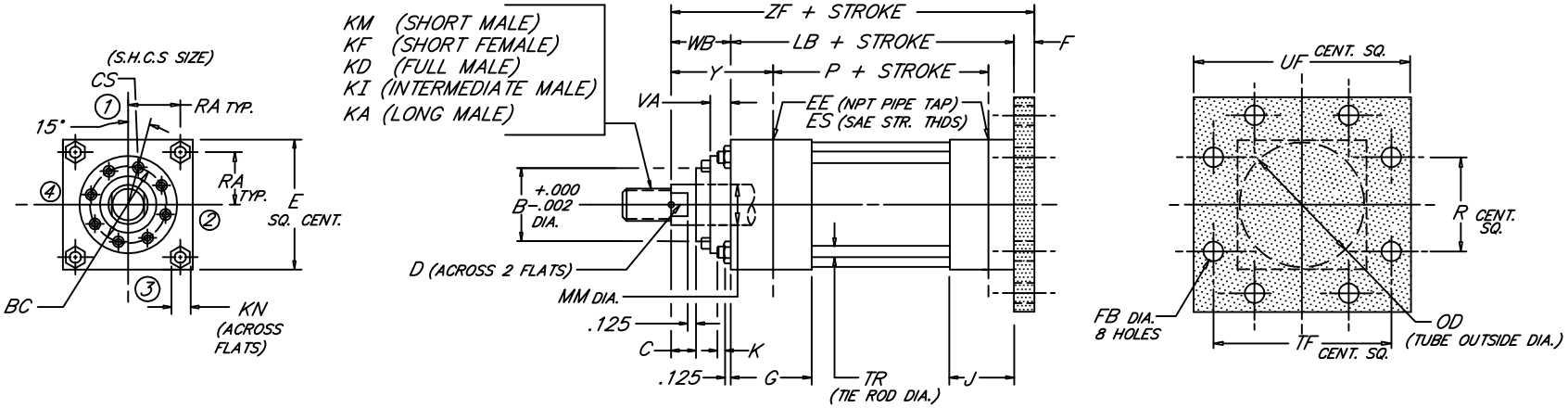

BORE	ROD MM	ROD THREAD X LENGTH KM & KF	KD	KI	KA	B	BC	C	CS	D	E	NPT EE	SAE ES	F	FB	G	J	K	KN	LB	OD	P	R	RA	RD	TF	TR	UF	VA	WB	Y	ZF
	3.500	2 1/2"-12 x 3.500	3 1/2"-12 x 3.500	3 1/4"-12 x 3.500	3 1/4"-12 x 6.500	4.249	5.000		.375	3.000															5.562				.375			
	4.000	3"-12 x 4.000	4"-12 x 4.000	3 3/4"-12 x 4.000	3 3/4"-12 x 7.500	4.749	5.625		.438	3.375															6.500				.500			
8.000	4.500	3 1/4"-12 x 4.500	4 1/2"-12 x 4.500	4 1/4"-12 x 4.500	4 1/4"-12 x 8.250	5.249	6.375	1.000	.500	3.875	9.500	1 1/2	-24	1.000	1.312	3.000	3.000	1.188	1.844	9.500	9.250	6.125	7.500	3.750	7.260	11.812	1.250	14.000	.500	2.250	3.938	12.750
	5.000	3 1/2"-12 x 5.000	5"-12 x 5.000	4 3/4"-12 x 5.000	4 3/4"-12 x 9.000	5.749	6.875		.500	4.250															7.750				.500			
	5.500	4"-12 x 5.500	5 1/2"-12 x 5.500	5 1/4"-12 x 5.500	5 1/4"-12 x 10.000	6.249	7.375		.500	4.625															8.260				.500			
BORE	MM	KM & KF	KD	KI	KA	B	BC	C	CS	D	E	EE	ES	F	FB	G	J	K	KN	LB	OD	P	R	RA	RD	TF	TR	UF	VA	WB	Y	ZF

FILE: 3.18_HP18S2.dwg REV: 02/09/2010

27650 Groesbeck Hwy Roseville, MI 48066-2759 Phone 586.775.7211 ∘ Fax 586.775.4545 Toll Free 800.526.7968 e-mail: sales@peninsularcylinders.com www.peninsularcylinders.com

CAP FIXED SPHERICAL EYE

Peninsular Mounting Style: **HP 22**

Heavy Duty Hydraulic Cylinder • 3000 P.S.I. Working Pressure • 5000 P.S.I. Rated Pressure

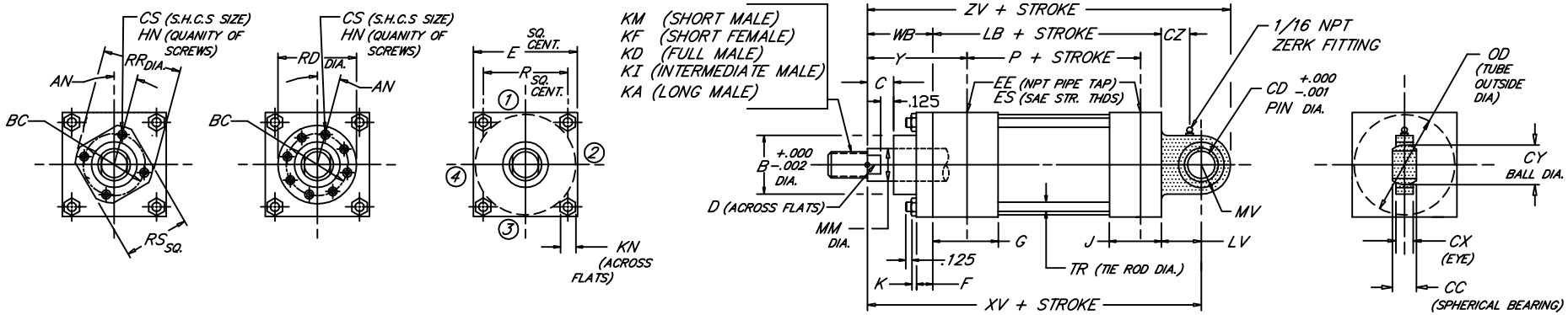

BORE	ROD MM	ROD THREAD X LENGTH KM & KF	KD	KI	KA	MAXIMUM PRESSURE	AN	B	BC	C	CC	CD	CS	CX	CY	CZ	D	E	EE (NPT)	ES (SAE)	F	G	HN	J	K	KN	LB	LV	MV	OD	P	R	RD	RR	RS	TR	WB	XV	Y	ZV
1.500	.625	7/16"-20 x .750	5/8"-18 x .750	1/2"-20 x .750	1/2"-20 x 1.125	1250 P.S.I.	15°	1.124	1.750	.375	.437	.500	.250	.375	.710	.438	.500	2.500	1/2	-8	.250	1.750	4	1.500	.406	.562	4.625	.812	.750	1.875	2.875	1.625	---	2.125	1.625	.375	1.000	6.437	2.000	7.187
	1.000	3/4"-16 x 1.125	1"-14 x 1.125	7/8"-14 x 1.125	7/8"-14 x 1.875		---	1.499	---	.500			---				.875				.375		---										---	---	---		1.375	6.812	2.375	7.562
2.000	1.000	3/4"-16 x 1.125	1"-14 x 1.125	7/8"-14 x 1.125	7/8"-14 x 1.875	2200 P.S.I.	15°	1.499	2.188	.500	.656	.750	.312	.562	1.086	.625	.875	3.000	1/2	-8	.375	1.750	4	1.500	.531	.750	4.625	1.187	1.250	2.375	2.875	2.050	---	2.656	2.000	.500	1.375	7.187	2.375	8.437
	1.375	1"-14 x 1.625	1 3/8"-12 x 1.625	1 1/4"-12 x 1.625	1 1/4"-12 x 2.500		---	1.999	---	.625			---				1.125				.625		---										---	---	---		1.625	7.437	2.625	8.687
2.500	1.000	3/4"-16 x 1.125	1"-14 x 1.125	7/8"-14 x 1.125	7/8"-14 x 1.875	1450 P.S.I.	15°	1.499	2.188	.500	.656	.750	.312	.562	1.086	.625	.875	3.500	1/2	-8	.375	1.750	4	1.500	.531	.750	4.750	1.187	1.250	3.000	3.000	2.550	---	2.656	2.000	.500	1.375	7.312	2.375	8.562
	1.375	1"-14 x 1.625	1 3/8"-12 x 1.625	1 1/4"-12 x 1.625	1 1/4"-12 x 2.500		15°	1.999	2.750	.625			.375				1.125				.375		4										---	3.320	2.500		1.625	7.562	2.625	8.812
	1.750	1 1/4"-12 x 2.000	1 3/4"-12 x 2.000	1 1/2"-12 x 2.000	1 1/2"-12 x 3.000		---	2.374	---	.750			---				1.500				.625		---										---	---	---		1.875	7.812	2.875	9.062
3.250	1.375	1"-14 x 1.625	1 3/8"-12 x 1.625	1 1/4"-12 x 1.625	1 1/4"-12 x 2.500	1500 P.S.I.	15°	1.999	2.750	.625	.875	1.000	.375	.750	1.436	.812	1.125	4.500	3/4	-12	.375	2.000	4	1.750	.656	.938	5.500	1.562	1.500	3.875	3.500	3.250	---	3.320	2.500	.625	1.625	8.687	2.750	10.187
	1.750	1 1/4"-12 x 2.000	1 3/4"-12 x 2.000	1 1/2"-12 x 2.000	1 1/2"-12 x 3.000		15°	2.374	3.125	.750			.375				1.500				.375		4										---	3.760	2.760		1.875	8.937	3.000	10.437
	2.000	1 1/2"-12 x 2.250	2"-12 x 2.250	1 3/4"-12 x 2.250	1 3/4"-12 x 3.500		---	2.624	---	.875			---				1.688				.750		---										---	---	---		2.000	9.062	3.125	10.562
4.000	1.750	1 1/4"-12 x 2.000	1 3/4"-12 x 2.000	1 1/2"-12 x 2.000	1 1/2"-12 x 3.000	1850 P.S.I.	15°	2.374	3.125	.750	1.187	1.375	.375	1.031	1.926	.906	1.500	5.000	3/4	-12	.375	2.000	4	1.750	.656	.938	5.750	1.937	1.750	4.750	3.750	3.820	---	3.760	2.760	.625	1.875	9.562	3.000	11.312
	2.000	1 1/2"-12 x 2.250	2"-12 x 2.250	1 3/4"-12 x 2.250	1 3/4"-12 x 3.500		30°	2.624	3.500	.875			.375				1.688				.375		6										4.260	---	---		2.000	9.687	3.125	11.437
	2.500	1 7/8"-12 x 3.000	2 1/2"-12 x 3.000	2 1/4"-12 x 3.000	2 1/4"-12 x 4.500		---	3.124	---	1.000			---				2.062				.875		---										----	---	---		2.250	9.937	3.375	11.687
5.000	2.000	1 1/2"-12 x 2.250	2"-12 x 2.250	1 3/4"-12 x 2.250	1 3/4"-12 x 3.500	2000 P.S.I.	15°	2.624	3.500	.875	1.531	1.750	.375	1.312	2.515	1.094	1.688	6.500	3/4	-12	.375	2.000	6	1.750	.875	1.312	6.250	2.437	2.250	6.000	4.250	4.950	4.260	---	---	.875	2.000	10.687	3.125	12.937
	2.500	1 7/8"-12 x 3.000	2 1/2"-12 x 3.000	2 1/4"-12 x 3.000	2 1/4"-12 x 4.500		15°	3.124	4.000	1.000			.375				2.062				.375		6										4.625	---	---		2.250	10.937	3.375	13.187
	3.000	2 1/4"-12 x 3.500	3"-12 x 3.500	2 3/4"-12 x 3.500	2 3/4"-12 x 5.500		15°	3.749	4.500	1.000			.375				2.625				.375		6										5.125	---	---		2.250	10.937	3.375	13.187
	3.500	2 1/2"-12 x 3.500	3 1/2"-12 x 3.500	3 1/4"-12 x 3.500	3 1/4"-12 x 6.500		---	4.249	---	1.000			---				3.000				.875		---										---	---	---		2.250	10.937	3.375	13.187
6.000	2.500	1 7/8"-12 x 3.000	2 1/2"-12 x 3.000	2 1/4"-12 x 3.000	2 1/4"-12 x 4.500	1800 P.S.I.	15°	3.124	4.000	1.000	1.750	2.000	.375	1.500	2.872	1.156	2.062	7.500	1	-16	.375	2.250	6	2.250	1.000	1.500	7.375	2.687	2.750	7.000	4.875	5.730	4.625	---	---	1.000	2.250	12.312	3.500	15.062
	3.000	2 1/4"-12 x 3.500	3"-12 x 3.500	2 3/4"-12 x 3.500	2 3/4"-12 x 5.500			3.749	4.500				.375				2.625				.375		6										5.125	---	---					
	3.500	2 1/2"-12 x 3.500	3 1/2"-12 x 3.500	3 1/4"-12 x 3.500	3 1/4"-12 x 6.500			4.249	5.000				.375				3.000				.375		8										5.562	---	---					
	4.000	3"-12 x 4.000	4"-12 x 4.000	3 3/4"-12 x 4.000	3 3/4"-12 x 7.500			4.749	5.625				.438				3.375				.500		8										6.500	---	---					
BORE	MM	KM & KF	KD	KI	KA	MAX. P.S.I.	AN	B	BC	C	CC	CD	CS	CX	CY	CZ	D	E	EE	ES	F	G	HN	J	K	KN	LB	LV	MV	OD	P	R	RD	RR	RS	TR	WB	XV	Y	ZV

FILE: 3.22_HP22L2.dwg REV: 02/09/2010

27650 Groesbeck Hwy Roseville, MI 48066-2759 Phone 586.775.7211 • Fax 586.775.4545 Toll Free 800.526.7968 e-mail: sales@peninsularcylinders.com www.peninsularcylinders.com

CAP FIXED EYE

Heavy Duty Hydraulic Cylinder • 3000 P.S.I. Working Pressure • 5000 P.S.I. Rated Pressure

Peninsular Mounting Style: **HP 25**

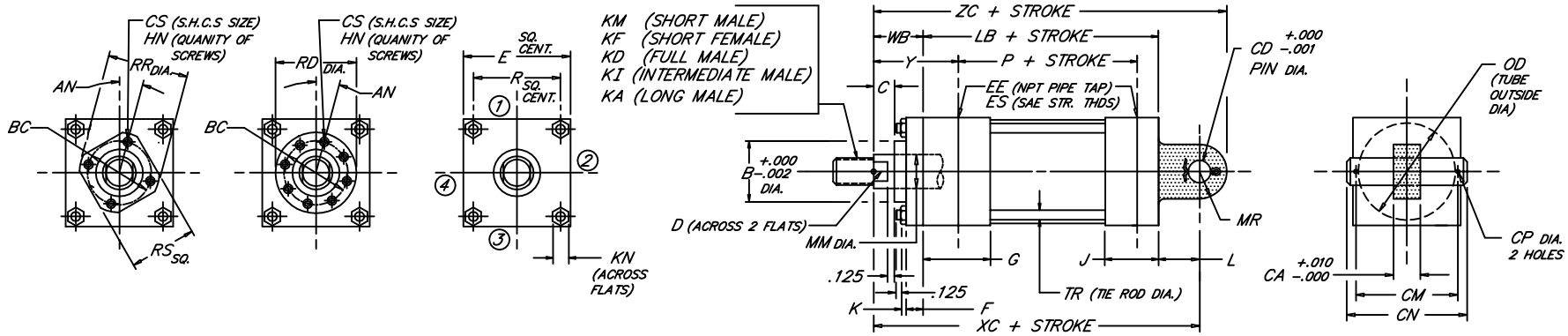

BORE	ROD MM	ROD THREAD X LENGTH KM & KF	KD	KI	KA	AN	B	BC	C	CA	CD	CS	CN	CM	CP	D	E	NPT EE	SAE ES	F	G	HN	J	K	KN	L	LB	MR	OD	P	R	RD	RR	RS	TR	WB	XC	Y	ZC
1.500	.625	7/16"-20 x .750	5/8"-18 x .750	1/2"-20 x .750	1/2"-20 x 1.125	15°	1.124	1.750	.375	.735	.500	.250	2.281	1.938	.106	.500	2.500	1/2	-8	.250	1.750	4	1.500	.406	.562	.750	4.625	.500.	1.875	2.875	1.625	---	2.125	1.625	.375	1.000	6.375	2.000	6.875
	1.000	3/4"-16 x 1.125	1"-14 x 1.125	7/8"-14 x 1.125	7/8"-14 x 1.875	---	1.499	---	.500			---				.875				.375		---										---	---	---		1.375	6.750	2.375	7.250
2.000	1.000	3/4"-16 x 1.125	1"-14 x 1.125	7/8"-14 x 1.125	7/8"-14 x 1.875	15°	1.499	2.188	.500	1.235	.750	.312	3.094	2.719	.140	.875	3.000	1/2	-8	.375	1.750	4	1.500	.531	.750	1.250	4.625	.750	2.375	2.875	2.050	---	2.656	2.000	.500	1.375	7.250	2.375	8.000
	1.375	1"-14 x 1.625	1 3/8"-12 x 1.625	1 1/4"-12 x 1.625	1 1/4"-12 x 2.500	---	1.999	---	.625			---				1.125				.625		---										---	---	---		1.625	7.500	2.625	8.250
2.500	1.000	3/4"-16 x 1.125	1"-14 x 1.125	7/8"-14 x 1.125	7/8"-14 x 1.875	15°	1.499	2.188	.500			.312				.875				.375		4										---	2.656	2.000		1.375	7.375	2.375	8.125
	1.375	1"-14 x 1.625	1 3/8"-12 x 1.625	1 1/4"-12 x 1.625	1 1/4"-12 x 2.500	15°	1.999	2.750	.625	1.235	.750	.375	3.094	2.719	.140	1.125	3.500	1/2	-8	.375	1.750	4	1.500	.531	.750	1.250	4.750	.750	3.000	3.000	2.550	---	3.320	2.500	.500	1.625	7.625	2.625	8.375
	1.750	1 1/4"-12 x 2.000	1 3/4"-12 x 2.000	1 1/2"-12 x 2.000	1 1/2"-12 x 3.000	---	2.374	---	.750			---				1.500				.625		---										---	---	---		1.875	7.875	2.875	8.625
3.250	1.375	1"-14 x 1.625	1 3/8"-12 x 1.625	1 1/4"-12 x 1.625	1 1/4"-12 x 2.500	15°	1.999	2.750	.625			.375				1.125				.375		4										---	3.320	2.500		1.625	8.625	2.750	9.625
	1.750	1 1/4"-12 x 2.000	1 3/4"-12 x 2.000	1 1/2"-12 x 2.000	1 1/2"-12 x 3.000	15°	2.374	3.125	.750	1.485	1.000	.375	3.594	3.219	.140	1.500	4.500	3/4	-12	.375	2.000	4	1.750	.656	.938	1.500	5.500	1.000	3.875	3.500	3.250	---	3.760	2.760	.625	1.875	8.875	3.000	9.875
	2.000	1 1/2"-12 x 2.250	2"-12 x 2.250	1 3/4"-12 x 2.250	1 3/4"-12 x 3.500	---	2.624	---	.875			---				1.688				.750		---										---	---	---		2.000	9.000	3.125	10.000
4.000	1.750	1 1/4"-12 x 2.000	1 3/4"-12 x 2.000	1 1/2"-12 x 2.000	1 1/2"-12 x 3.000	15°	2.374	3.125	.750			.375				1.500				.375		4										---	3.760	2.760		1.875	9.750	3.000	11.125
	2.000	1 1/2"-12 x 2.250	2"-12 x 2.250	1 3/4"-12 x 2.250	1 3/4"-12 x 3.500	30°	2.624	3.500	.875	1.985	1.375	.375	4.656	4.250	.173	1.688	5.000	3/4	-12	.375	2.000	6	1.750	.656	.938	2.125	5.750	1.375	4.750	3.750	3.820	4.260	---	---	.625	2.000	9.875	3.125	11.250
	2.500	1 7/8"-12 x 3.000	2 1/2"-12 x 3.000	2 1/4"-12 x 3.000	2 1/4"-12 x 4.500	---	3.124	---	1.000			---				2.062				.875		---										----	---	---		2.250	10.125	3.375	11.500
5.000	2.000	1 1/2"-12 x 2.250	2"-12 x 2.250	1 3/4"-12 x 2.250	1 3/4"-12 x 3.500	15°	2.624	3.500	.875			.375				1.688				.375		6										4.260	---	---		2.000	10.500	3.125	12.250
	2.500	1 7/8"-12 x 3.000	2 1/2"-12 x 3.000	2 1/4"-12 x 3.000	2 1/4"-12 x 4.500	15°	3.124	4.000	1.000			.375				2.062				.375		6										4.625	---	---		2.250	10.750	3.375	12.500
	3.000	2 1/4"-12 x 3.500	3"-12 x 3.500	2 3/4"-12 x 3.500	2 3/4"-12 x 5.500	15°	3.749	4.500	1.000	2.485	1.750	.375	5.656	5.250	.173	2.625	6.500	3/4	-12	.375	2.000	6	1.750	.875	1.312	2.250	6.250	1.750	6.000	4.250	4.950	5.125	---	---	.875	2.250	10.750	3.375	12.500
	3.500	2 1/2"-12 x 3.500	3 1/2"-12 x 3.500	3 1/4"-12 x 3.500	3 1/4"-12 x 6.500	---	4.249	---	1.000			---				3.000				.875		---										---	---	---		2.250	10.750	3.375	12.500
6.000	2.500	1 7/8"-12 x 3.000	2 1/2"-12 x 3.000	2 1/4"-12 x 3.000	2 1/4"-12 x 4.500		3.124	4.000				.375				2.062				.375		6										4.625	---	---					
	3.000	2 1/4"-12 x 3.500	3"-12 x 3.500	2 3/4"-12 x 3.500	2 3/4"-12 x 5.500	15°	3.749	4.500	1.000	2.485	2.000	.375	5.719	5.281	.204	2.625	7.500	1	-16	.375	2.250	6	2.250	1.000	1.500	2.500	7.375	2.000	7.000	4.875	5.730	5.125	---	---	1.000	2.250	12.125	3.500	14.125
	3.500	2 1/2"-12 x 3.500	3 1/2"-12 x 3.500	3 1/4"-12 x 3.500	3 1/4"-12 x 6.500		4.249	5.000				.375				3.000				.375		8										5.562	---	---					
	4.000	3"-12 x 4.000	4"-12 x 4.000	3 3/4"-12 x 4.000	3 3/4"-12 x 7.500		4.749	5.625				.438				3.375				.500		8										6.500	---	---					
BORE	MM	KM & KF	KD	KI	KA	AN	B	BC	C	CA	CD	CS	CN	CM	CP	D	E	EE	ES	F	G	HN	J	K	KN	L	LB	MR	OD	P	R	RD	RR	RS	TR	WB	XC	Y	ZC

FILE: 3.25_HP25S2.dwg REV: 02/09/2010

27650 Groesbeck Hwy Roseville, MI 48066-2759 Phone 586.775.7211 • Fax 586.775.4545 Toll Free 800.526.7968 e-mail: sales@peninsularcylinders.com www.peninsularcylinders.com

CAP FIXED EYE

Heavy Duty Hydraulic Cylinder • 3000 P.S.I. Working Pressure • 5000 P.S.I. Rated Pressure

Peninsular Mounting Style: **HP 25**

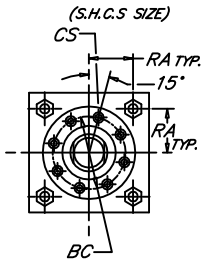

8" BORE

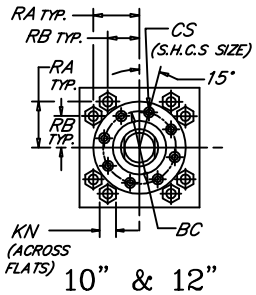

10" & 12" BORES

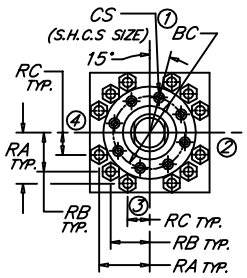

14" BORE

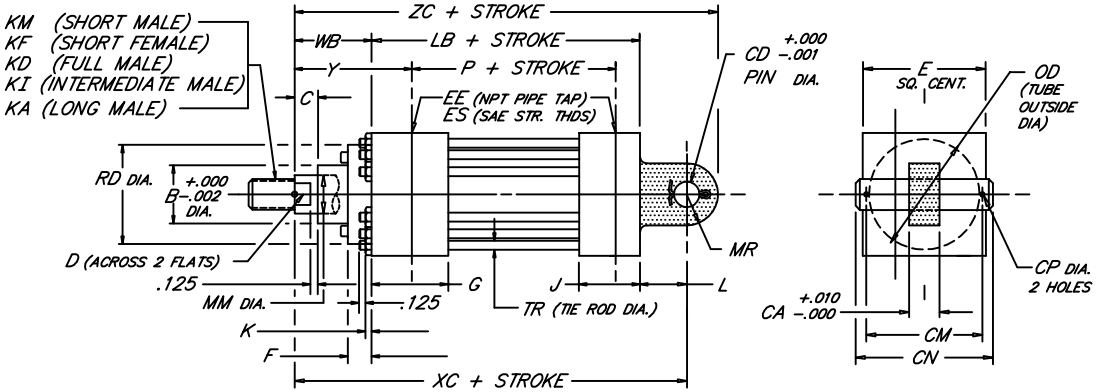

BORE	ROD MM	ROD THREAD X LENGTH KM & KF	KD	KI	KA	B	BC	C	CA	CD	CM	CN	CP	CS	D	E	NPT EE	SAE ES	F	G	J	K	KN	L	LB	MR	P	OD	RA	RB	RC	RD	TR	WB	XC	Y	ZC
8.000	3.500	2 1/2"-12 x 3.500	3 1/2"-12 x 3.500	3 1/4"-12 x 3.500	3 1/4"-12 x 6.500	4.249	5.000							.375	3.000				.375													5.562					
	4.000	3"-12 x 4.000	4"-12 x 4.000	3 3/4"-12 x 4.000	3 3/4"-12 x 7.500	4.749	5.625							.438	3.375				.500													6.500					
	4.500	3 1/4"-12 x 4.500	4 1/2"-12 x 4.500	4 1/4"-12 x 4.500	4 1/4"-12 x 8.250	5.249	6.375	1.000	2.985	3.000	6.344	6.844	.250	.500	3.875	9.500	1 1/2	-24	.500	3.000	3.000	1.188	1.844	3.250	9.500	2.750	6.125	9.250	3.750	---	---	7.260	1.250	2.250	15.000	3.938	17.750
	5.000	3 1/2"-12 x 5.000	5"-12 x 5.000	4 3/4"-12 x 5.000	4 3/4"-12 x 9.000	5.749	6.875							.500	4.250				.500													7.750					
	5.500	4"-12 x 5.500	5 1/2"-12 x 5.500	5 1/4"-12 x 5.500	5 1/4"-12 x 10.000	6.249	7.375							.500	4.625				.500													8.260					
10.000	4.500	3 1/4"-12 x 4.500	4 1/2"-12 x 4.500	4 1/4"-12 x 4.500	4 1/4"-12 x 8.250	5.249	6.375							.500	3.875				.500													7.260		2.937	19.062	4.750	22.562
	5.000	3 1/2"-12 x 5.000	5"-12 x 5.000	4 3/4"-12 x 5.000	4 3/4"-12 x 9.000	5.749	6.875							.500	4.250				.500													7.750		3.187	19.312	5.000	22.812
	5.500	4"-12 x 5.500	5 1/2"-12 x 5.500	5 1/4"-12 x 5.500	5 1/4"-12 x 10.000	6.249	7.375	1.000	3.985	3.500	8.406	8.969	.312	.500	4.625	12.625	2	-32	.500	3.688	3.688	1.094	1.656	4.000	12.125	3.500	8.500	11.750	5.291	3.775	---	8.260	1.125	3.187	19.312	5.000	22.812
	6.000	4 1/2"-12 x 6.000	6"-12 x 6.000	5 3/4"-12 x 6.000	5 3/4"-12 x 10.000	6.749	8.500							.625	5.125				.875													10.000		3.437	19.562	5.250	23.062
	7.000	5"-12 x 7.000	7"-12 x 7.000	6 1/2"-12 x 7.000	6 1/2"-12 x 10.000	7.749	9.437							.625	6.000				.875													10.500		3.437	19.562	5.250	23.062
12.000	5.500	4"-12 x 5.500	5 1/2"-12 x 5.500	5 1/4"-12 x 5.500	5 1/4"-12 x 10.000	6.249	7.375							.500	4.625				.500													8.260		3.187	22.187	5.375	26.187
	6.000	4 1/2"-12 x 6.000	6"-12 x 6.000	5 3/4"-12 x 6.000	5 3/4"-12 x 10.000	6.749	8.500	1.000	4.485	4.000	9.406	9.969	.312	.625	5.125	14.875	2 1/2	-32	.875	4.438	4.438	1.188	1.844	4.500	14.500	4.000	10.125	14.000	6.270	4.555	---	10.000	1.250	3.437	22.437	5.625	26.437
	7.000	5"-12 x 7.000	7"-12 x 7.000	6 1/2"-12 x 7.000	6 1/2"-12 x 10.000	7.749	9.437							.625	6.000				.875													10.500		3.437	22.437	5.625	26.437
	8.000	5 3/4"-12 x 8.000	8"-12 x 8.000	7 1/2"-12 x 8.000	7 1/2"-12 x 12.000	8.749	10.500							.625	7.000				.875													12.000		3.437	22.437	5.625	26.437
14.000	7.000	5"-12 x 7.000	7"-12 x 7.000	6 1/2"-12 x 7.000	6 1/2"-12 x 10.000	7.749	9.437								6.000																	10.500					
	8.000	5 3/4"-12 x 8.000	8"-12 x 8.000	7 1/2"-12 x 8.000	7 1/2"-12 x 12.000	8.749	10.500	1.000	5.985	5.000	12.406	12.969	.312	.625	7.000	17.125	3	-32	.875	4.875	4.875	1.188	1.844	5.750	15.625	5.000	10.875	16.000	7.485	6.143	4.409	12.000	1.250	3.437	24.812	5.625	29.812
	9.000	6 1/2"-12 x 9.000	9"-12 x 9.000	8 1/2"-12 x 9.000	8 1/2"-12 x 13.500	9.749	11.500								7.875																	13.000					
	10.000	7 1/4"-12 x 10.000	10"-12 x 10.000	9 1/2"-12 x 10.000	9 1/2"-12 x 15.000	10.749	12.500								8.625																	14.000					

FILE: 3.25_HP25L2.dwg REV: 02/09/2010

27650 Groesbeck Hwy Roseville, MI 48066-2759 Phone 586.775.7211 • Fax 586.775.4545 Toll Free 800.526.7968 e-mail: sales@peninsularcylinders.com www.peninsularcylinders.com

HEAD RECTANGULAR

Heavy Duty Hydraulic Cylinder • 3000 P.S.I. Working Pressure • 5000 P.S.I. Rated Pressure

Peninsular Mounting Style: **HP 28**

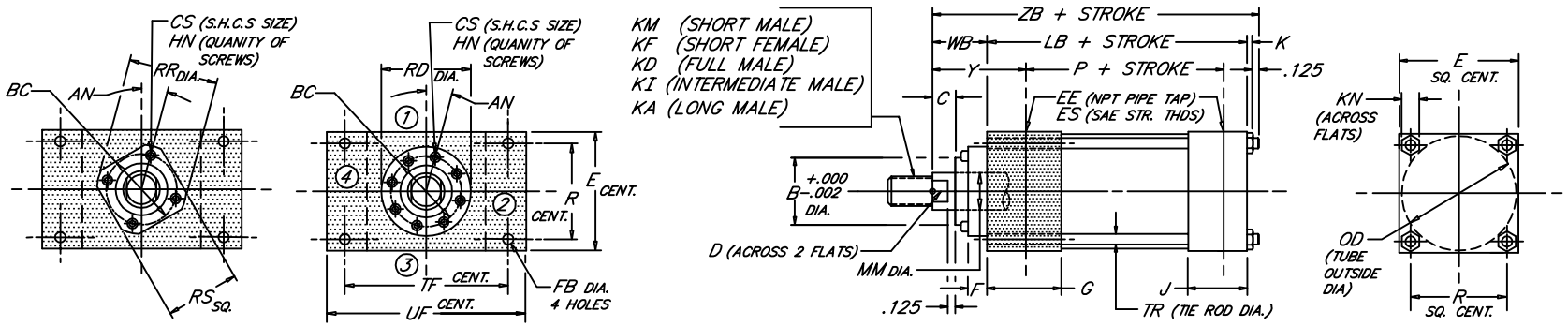

BORE	ROD MM	ROD THREAD X LENGTH KM & KF	KD	KI	KA	AN	B	BC	C	CS	D	E	EE (NPT)	ES (SAE)	F	FB	G	HN	J	K	KN	LB	OD	P	R	RD	RR	RS	TF	TR	UF	WB	Y	ZB
1.500	.625	7/16"-20 x .750	5/8"-18 x .750	1/2"-20 x .750	1/2"-20 x 1.125	15°	1.124	1.750	.375	.250	.500	2.500	1/2	-8	.250	.437	1.750	4	1.500	.406	.562	4.625	1.875	2.875	1.625	---	2.125	1.625	3.438	.375	4.250	1.000	2.000	6.156
	1.000	3/4"-16 x 1.125	1"-14 x 1.125	7/8"-14 x 1.125	7/8"-14 x 1.875		1.499	2.125	.500		.875							6								2.500	---	---				1.375	2.375	6.531
2.000	1.000	3/4"-16 x 1.125	1"-14 x 1.125	7/8"-14 x 1.125	7/8"-14 x 1.875	15°	1.499	2.188	.500	.312	.875	3.000	1/2	-8	.375	.562	1.750	4	1.500	.531	.750	4.625	2.375	2.875	2.050	---	2.656	2.000	4.125	.500	5.125	1.375	2.375	6.656
	1.375	1"-14 x 1.625	1 3/8"-12 x 1.625	1 1/4"-12 x 1.625	1 1/4"-12 x 2.500		1.999	2.594	.625	.250	1.125				.250			8								3.000	---	---				1.625	2.625	6.906
2.500	1.000	3/4"-16 x 1.125	1"-14 x 1.125	7/8"-14 x 1.125	7/8"-14 x 1.875	15°	1.499	2.188	.500	.312	.875	3.500	1/2	-8	.375	.562	1.750	4	1.500	.531	.750	4.750	3.000	3.000	2.550	---	2.656	2.000	4.625	.500	5.625	1.375	2.375	6.781
	1.375	1"-14 x 1.625	1 3/8"-12 x 1.625	1 1/4"-12 x 1.625	1 1/4"-12 x 2.500	15°	1.999	2.750	.625	.375	1.125							4								---	3.320	2.500				1.625	2.625	7.031
	1.750	1 1/4"-12 x 2.000	1 3/4"-12 x 2.000	1 1/2"-12 x 2.000	1 1/2"-12 x 3.000	30°	2.374	3.125	.750	.375	1.500							4								---	3.760	2.760				1.875	2.875	7.281
3.250	1.375	1"-14 x 1.625	1 3/8"-12 x 1.625	1 1/4"-12 x 1.625	1 1/4"-12 x 2.500		1.999	2.750	.625		1.125	4.500	3/4	-12	.375	.687	2.000	4	1.750	.656	.938	5.500	3.875	3.500	3.250	---	3.320	2.500	5.875	.625	7.125	1.625	2.750	7.906
	1.750	1 1/4"-12 x 2.000	1 3/4"-12 x 2.000	1 1/2"-12 x 2.000	1 1/2"-12 x 3.000	15°	2.374	3.125	.750	.375	1.500							4								---	3.760	2.760				1.875	3.000	8.156
	2.000	1 1/2"-12 x 2.250	2"-12 x 2.250	1 3/4"-12 x 2.250	1 3/4"-12 x 3.500		2.624	3.500	.875		1.688							6								4.260	---	---				2.000	3.125	8.281
4.000	1.750	1 1/4"-12 x 2.000	1 3/4"-12 x 2.000	1 1/2"-12 x 2.000	1 1/2"-12 x 3.000	15°	2.374	3.125	.750		1.500	5.000	3/4	-12	.375	.687	2.000	4	1.750	.656	.938	5.750	4.750	3.750	3.820	---	3.760	2.760	6.375	.625	7.625	1.875	3.000	8.406
	2.000	1 1/2"-12 x 2.250	2"-12 x 2.250	1 3/4"-12 x 2.250	1 3/4"-12 x 3.500	30°	2.624	3.500	.875	.375	1.688							6								4.260	---	---				2.000	3.125	8.531
	2.500	1 7/8"-12 x 3.000	2 1/2"-12 x 3.000	2 1/4"-12 x 3.000	2 1/4"-12 x 4.500	15°	3.124	4.000	1.000		2.062							6								4.625	---	---				2.250	3.375	8.781
5.000	2.000	1 1/2"-12 x 2.250	2"-12 x 2.250	1 3/4"-12 x 2.250	1 3/4"-12 x 3.500	15°	2.624	3.500	.875	.375	1.688	6.500	3/4	-12	.375	.937	2.000	6	1.750	.875	1.312	6.250	6.000	4.250	4.950	4.260	---	---	8.188	.875	9.750	2.000	3.125	9.250
	2.500	1 7/8"-12 x 3.000	2 1/2"-12 x 3.000	2 1/4"-12 x 3.000	2 1/4"-12 x 4.500		3.124	4.000	1.000		2.062							6								4.625	---	---				2.250	3.375	9.500
	3.000	2 1/4"-12 x 3.500	3"-12 x 3.500	2 3/4"-12 x 3.500	2 3/4"-12 x 5.500		3.749	4.500	1.000		2.625							6								5.125	---	---				2.250	3.375	9.500
	3.500	2 1/2"-12 x 3.500	3 1/2"-12 x 3.500	3 1/4"-12 x 3.500	3 1/4"-12 x 6.500		4.249	5.000	1.000		3.000							8								5.562	---	---				2.250	3.375	9.500
6.000	2.500	1 7/8"-12 x 3.000	2 1/2"-12 x 3.000	2 1/4"-12 x 3.000	2 1/4"-12 x 4.500	15°	3.124	4.000		.375	2.062	7.500	1	-16	.375	1.062	2.250	6	2.250	1.000	1.500	7.375	7.000	4.875	5.730	4.625	---	---	9.438	1.000	11.250	2.250	3.500	10.750
	3.000	2 1/4"-12 x 3.500	3"-12 x 3.500	2 3/4"-12 x 3.500	2 3/4"-12 x 5.500		3.749	4.500	1.000	.375	2.625				.375			6								5.125	---	---						
	3.500	2 1/2"-12 x 3.500	3 1/2"-12 x 3.500	3 1/4"-12 x 3.500	3 1/4"-12 x 6.500		4.249	5.000		.375	3.000				.375			8								5.562	---	---						
	4.000	3"-12 x 4.000	4"-12 x 4.000	3 3/4"-12 x 4.000	3 3/4"-12 x 7.500		4.749	5.625		.438	3.375				.500			8								6.500	---	---						
BORE	MM	KM & KF	KD	KI	KA	AN	B	BC	C	CS	D	E	EE	ES	F	FB	G	HN	J	K	KN	LB	OD	P	R	RD	RR	RS	TF	TR	UF	WB	Y	ZB

FILE: 3.28_HP28S2.dwg REV: 02/09/2010

27650 Groesbeck Hwy Roseville, MI 48066-2759 Phone 586.775.7211 • Fax 586.775.4545 Toll Free 800.526.7968 e-mail: sales@peninsularcylinders.com www.peninsularcylinders.com

HEAD RECTANGULAR

Heavy Duty Hydraulic Cylinder • 3000 P.S.I. Working Pressure • 5000 P.S.I. Rated Pressure

Peninsular Mounting Style: **HP 28**

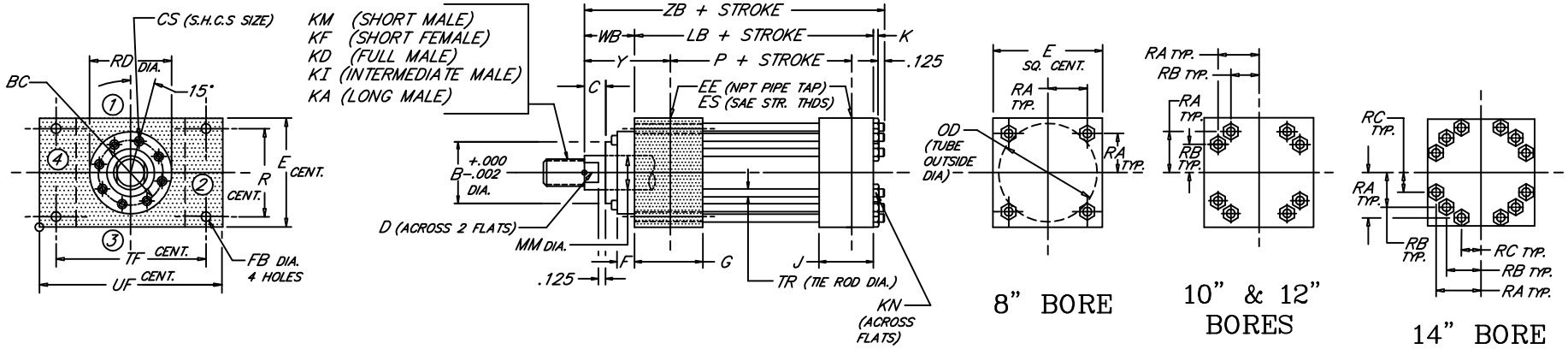

BORE	ROD MM	ROD THREAD X LENGTH KM & KF	KD	KI	KA	B	BC	C	CS	D	E	NPT EE	SAE ES	F	FB	G	J	K	KN	LB	P	OD	R	RA	RB	RC	RD	TF	TR	UF	WB	Y	ZB
8.000	3.500	2 1/2"-12 x 3.500	3 1/2"-12 x 3.500	3 1/4"-12 x 3.500	3 1/4"-12 x 6.500	4.249	5.000		.375	3.000				.375													5.562						
	4.000	3"-12 x 4.000	4"-12 x 4.000	3 3/4"-12 x 4.000	3 3/4"-12 x 7.500	4.749	5.625		.438	3.375				.500													6.500						
	4.500	3 1/4"-12 x 4.500	4 1/2"-12 x 4.500	4 1/4"-12 x 4.500	4 1/4"-12 x 8.250	5.249	6.375	1.000	.500	3.875	9.500	1 1/2	-24	.500	1.312	3.000	3.000	1.188	1.844	9.500	6.125	9.250	7.500	3.750	---	---	7.260	11.812	1.250	14.000	2.250	3.938	13.063
	5.000	3 1/2"-12 x 5.000	5"-12 x 5.000	4 3/4"-12 x 5.000	4 3/4"-12 x 9.000	5.749	6.875		.500	4.250				.500													7.750						
	5.500	4"-12 x 5.500	5 1/2"-12 x 5.500	5 1/4"-12 x 5.500	5 1/4"-12 x 10.000	6.249	7.375		.500	4.625				.500													8.260						
10.000	4.500	3 1/4"-12 x 4.500	4 1/2"-12 x 4.500	4 1/4"-12 x 4.500	4 1/4"-12 x 8.250	5.249	6.375		.500	3.875				.500													7.260				2.937	4.750	16.281
	5.000	3 1/2"-12 x 5.000	5"-12 x 5.000	4 3/4"-12 x 5.000	4 3/4"-12 x 9.000	5.749	6.875		.500	4.250				.500													7.750				3.187	5.000	16.531
	5.500	4"-12 x 5.500	5 1/2"-12 x 5.500	5 1/4"-12 x 5.500	5 1/4"-12 x 10.000	6.249	7.375	1.000	.500	4.625	12.625	2	-32	.500	1.812	3.688	3.688	1.094	1.656	12.125	8.500	11.750	9.625	5.291	3.775	---	8.260	15.875	1.125	19.000	3.187	5.000	16.531
	6.000	4 1/2"-12 x 6.000	6"-12 x 6.000	5 3/4"-12 x 6.000	5 3/4"-12 x 10.000	6.749	8.500		.625	5.125				.875													10.000				3.437	5.250	16.781
	7.000	5"-12 x 7.000	7"-12 x 7.000	6 1/2"-12 x 7.000	6 1/2"-12 x 10.000	7.749	9.437		.625	6.000				.875													10.500				3.437	5.250	16.781
12.000	5.500	4"-12 x 5.500	5 1/2"-12 x 5.500	5 1/4"-12 x 5.500	5 1/4"-12 x 10.000	6.249	7.375		.500	4.625				.500													8.260				3.187	5.375	19.000
	6.000	4 1/2"-12 x 6.000	6"-12 x 6.000	5 3/4"-12 x 6.000	5 3/4"-12 x 10.000	6.749	8.500	1.000	.625	5.125	14.875	2 1/2	-32	.875	2.062	4.438	4.438	1.188	1.844	14.500	10.125	14.000	11.450	6.270	4.555	---	10.000	18.500	1.250	22.000	3.437	5.625	19.250
	7.000	5"-12 x 7.000	7"-12 x 7.000	6 1/2"-12 x 7.000	6 1/2"-12 x 10.000	7.749	9.437		.625	6.000				.875													10.500				3.437	5.625	19.250
	8.000	5 3/4"-12 x 8.000	8"-12 x 8.000	7 1/2"-12 x 8.000	7 1/2"-12 x 12.000	8.749	10.500		.625	7.000				.875													12.000				3.437	5.625	19.250
14.000	7.000	5"-12 x 7.000	7"-12 x 7.000	6 1/2"-12 x 7.000	6 1/2"-12 x 10.000	7.749	9.437			6.000																	10.500						
	8.000	5 3/4"-12 x 8.000	8"-12 x 8.000	7 1/2"-12 x 8.000	7 1/2"-12 x 12.000	8.749	10.500	1.000	.625	7.000	17.125	3	-32	.875	2.312	4.875	4.875	1.188	1.844	15.625	10.875	16.000	13.260	7.485	6.143	4.409	12.000	21.000	1.250	25.000	3.437	5.625	20.375
	9.000	6 1/2"-12 x 9.000	9"-12 x 9.000	8 1/2"-12 x 9.000	8 1/2"-12 x 13.500	9.749	11.500			7.875																	13.000						
	10.000	7 1/4"-12 x 10.000	10"-12 x 10.000	9 1/2"-12 x 10.000	9 1/2"-12 x 15.000	10.749	12.500			8.625																	14.000						
BORE	MM	KM & KF	KD	KI	KA	B	BC	C	CS	D	E	EE	ES	F	FB	G	J	K	KN	LB	P	OD	R	RA	RB	RC	RD	TF	TR	UF	WB	Y	ZB

FILE: 3.28_HP28L2.dwg REV: 02/09/2010

27650 Groesbeck Hwy Roseville, MI 48066-2759 Phone 586.775.7211 • Fax 586.775.4545 Toll Free 800.526.7968 e-mail: sales@peninsularcylinders.com www.peninsularcylinders.com

CAP RECTANGULAR

Heavy Duty Hydraulic Cylinder • 3000 P.S.I. Working Pressure • 5000 P.S.I. Rated Pressure

Peninsular Mounting Style: **HP 29**

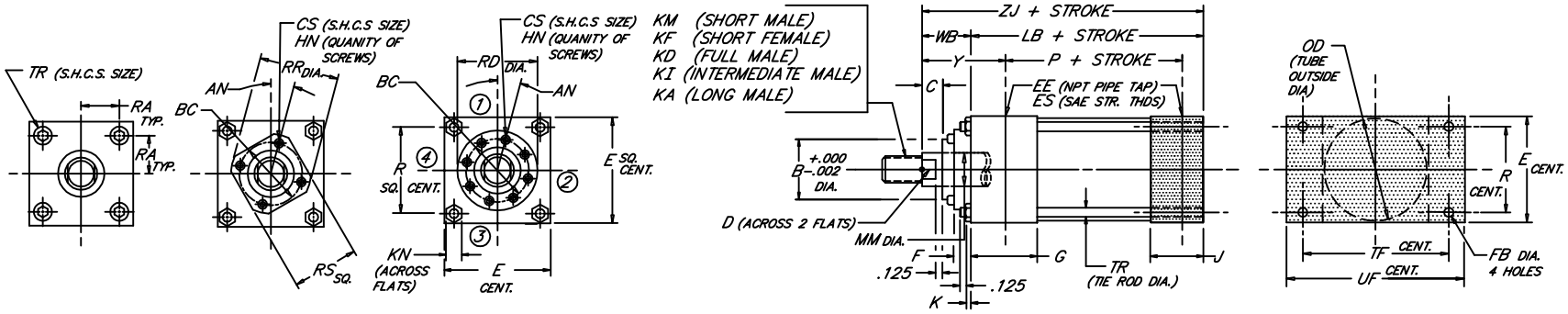

BORE	ROD MM	ROD THREAD X LENGTH KM & KF	KD	KI	KA	AN	B	BC	C	CS	D	E	NPT EE	SAE ES	F	FB	G	HN	J	K	KN	LB	OD	P	R	RD	RR	RS	TF	TR	UF	WB	Y	ZJ
1.500	.625	7/16"-20 x .750	5/8"-18 x .750	1/2"-20 x .750	1/2"-20 x 1.125	15°	1.124	1.750	.375	.250	.500	2.500	1/2	-8	.250	.437	1.750	4	1.500	.406	.562	4.625	1.875	2.875	1.625	---	2.125	1.625	3.438	.375	4.250	1.000	2.000	5.625
	1.000	3/4"-16 x 1.125	1"-14 x 1.125	7/8"-14 x 1.125	7/8"-14 x 1.875	---	1.499	---	.500	---	.875				.375			---								---	---	---				1.375	2.375	6.000
2.000	1.000	3/4"-16 x 1.125	1"-14 x 1.125	7/8"-14 x 1.125	7/8"-14 x 1.875	15°	1.499	2.188	.500	.312	.875	3.000	1/2	-8	.375	.562	1.750	4	1.500	.531	.750	4.625	2.375	2.875	2.050	---	2.656	2.000	4.125	.500	5.125	1.375	2.375	6.000
	1.375	1"-14 x 1.625	1 3/8"-12 x 1.625	1 1/4"-12 x 1.625	1 1/4"-12 x 2.500	---	1.999	---	.625	---	1.125				.625			---								---	---	---				1.625	2.625	6.250
2.500	1.000	3/4"-16 x 1.125	1"-14 x 1.125	7/8"-14 x 1.125	7/8"-14 x 1.875	15°	1.499	2.188	.500	.312	.875	3.500	1/2	-8	.375	.562	1.750	4	1.500	.531	.750	4.750	3.000	3.000	2.550	---	2.656	2.000	4.625	.500	5.625	1.375	2.375	6.125
	1.375	1"-14 x 1.625	1 3/8"-12 x 1.625	1 1/4"-12 x 1.625	1 1/4"-12 x 2.500	15°	1.999	2.750	.625	.375	1.125				.375			4								---	3.320	2.500				1.625	2.625	6.375
	1.750	1 1/4"-12 x 2.000	1 3/4"-12 x 2.000	1 1/2"-12 x 2.000	1 1/2"-12 x 3.000	---	2.374	---	.750	---	1.500				.625			---								---	---	---				1.875	2.875	6.625
3.250	1.375	1"-14 x 1.625	1 3/8"-12 x 1.625	1 1/4"-12 x 1.625	1 1/4"-12 x 2.500	15°	1.999	2.750	.625	.375	1.125	4.500	3/4	-12	.375	.687	2.000	4	1.750	.656	.938	5.500	3.875	3.500	3.250	---	3.320	2.500	5.875	.625	7.125	1.625	2.750	7.125
	1.750	1 1/4"-12 x 2.000	1 3/4"-12 x 2.000	1 1/2"-12 x 2.000	1 1/2"-12 x 3.000	15°	2.374	3.125	.750	.375	1.500				.375			4								---	3.760	2.760				1.875	3.000	7.375
	2.000	1 1/2"-12 x 2.250	2"-12 x 2.250	1 3/4"-12 x 2.250	1 3/4"-12 x 3.500	---	2.624	---	.875	---	1.688				.750			---								---	---	---				2.000	3.125	7.500
4.000	1.750	1 1/4"-12 x 2.000	1 3/4"-12 x 2.000	1 1/2"-12 x 2.000	1 1/2"-12 x 3.000	15°	2.374	3.125	.750	.375	1.500	5.000	3/4	-12	.375	.687	2.000	4	1.750	.656	.938	5.750	4.750	3.750	3.820	---	3.760	2.760	6.375	.625	7.625	1.875	3.000	7.625
	2.000	1 1/2"-12 x 2.250	2"-12 x 2.250	1 3/4"-12 x 2.250	1 3/4"-12 x 3.500	30°	2.624	3.500	.875	.375	1.688				.375			6								4.260	---	---				2.000	3.125	7.750
	2.500	1 7/8"-12 x 3.000	2 1/2"-12 x 3.000	2 1/4"-12 x 3.000	2 1/4"-12 x 4.500	---	3.124	---	1.000	---	2.062				.875			---								---	---	---				2.250	3.375	8.000
5.000	2.000	1 1/2"-12 x 2.250	2"-12 x 2.250	1 3/4"-12 x 2.250	1 3/4"-12 x 3.500	15°	2.624	3.500	.875	.375	1.688	6.500	3/4	-12	.375	.937	2.000	6	1.750	.875	1.312	6.250	6.000	4.250	4.950	4.260	---	---	8.188	.875	9.750	2.000	3.125	8.250
	2.500	1 7/8"-12 x 3.000	2 1/2"-12 x 3.000	2 1/4"-12 x 3.000	2 1/4"-12 x 4.500	15°	3.124	4.000	1.000	.375	2.062				.375			6								4.625	---	---				2.250	3.375	8.500
	3.000	2 1/4"-12 x 3.500	3"-12 x 3.500	2 3/4"-12 x 3.500	2 3/4"-12 x 5.500	15°	3.749	4.500	1.000	.375	2.625				.375			6								5.125	---	---				2.250	3.375	8.500
	3.500	2 1/2"-12 x 3.500	3 1/2"-12 x 3.500	3 1/4"-12 x 3.500	3 1/4"-12 x 6.500	---	4.249	---	1.000	---	3.000				.875			---								---	---	---				2.250	3.375	8.500
6.000	2.500	1 7/8"-12 x 3.000	2 1/2"-12 x 3.000	2 1/4"-12 x 3.000	2 1/4"-12 x 4.500	15°	3.124	4.000	1.000	.375	2.062	7.500	1	-16	.375	1.062	2.250	6	2.250	1.000	1.500	7.375	7.000	4.875	5.730	4.625	---	---	9.438	1.000	11.250	2.250	3.500	9.625
	3.000	2 1/4"-12 x 3.500	3"-12 x 3.500	2 3/4"-12 x 3.500	2 3/4"-12 x 5.500		3.749	4.500		.375	2.625				.375			6								5.125	---	---						
	3.500	2 1/2"-12 x 3.500	3 1/2"-12 x 3.500	3 1/4"-12 x 3.500	3 1/4"-12 x 6.500		4.249	5.000		.375	3.000				.375			8								5.562	---	---						
	4.000	3"-12 x 4.000	4"-12 x 4.000	3 3/4"-12 x 4.000	3 3/4"-12 x 7.500		4.749	5.625		.438	3.375				.500			8								6.500	---	---						
BORE	MM	KM & KF	KD	KI	KA	AN	B	BC	C	CS	D	E	EE	ES	F	FB	G	HN	J	K	KN	LB	OD	P	R	RD	RR	RS	TF	TR	UF	WB	Y	ZJ

FILE: 3.29_HP29S2.dwg REV: 02/09/2010

27650 Groesbeck Hwy Roseville, MI 48066-2759 Phone 586.775.7211 • Fax 586.775.4545 Toll Free 800.526.7968 e-mail: sales@peninsularcylinders.com www.peninsularcylinders.com

CAP RECTANGULAR

Heavy Duty Hydraulic Cylinder • 3000 P.S.I. Working Pressure • 5000 P.S.I. Rated Pressure

Peninsular Mounting Style: **HP 29**

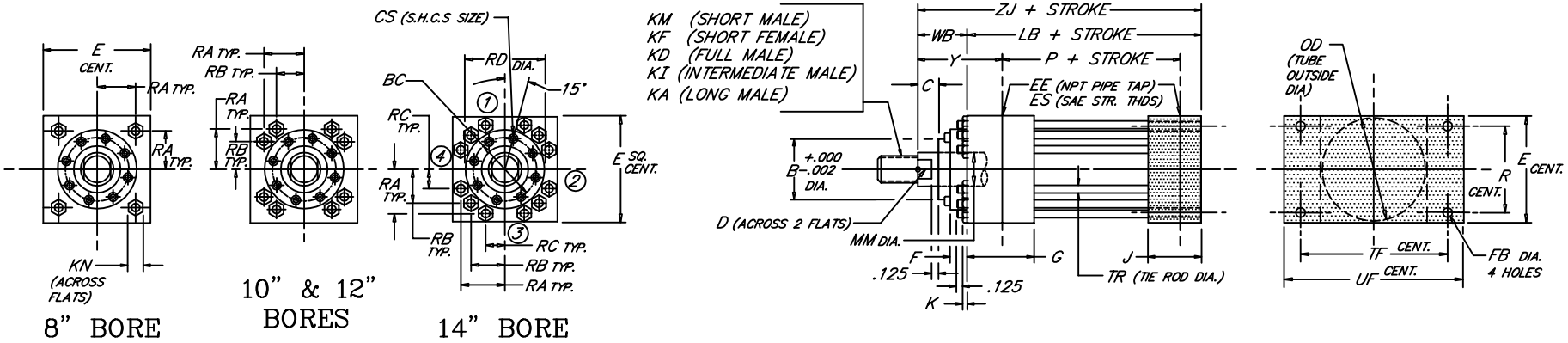

BORE	ROD MM	ROD THREAD X LENGTH KM & KF	KD	KI	KA	B	BC	C	CS	D	E	NPT EE	SAE ES	F	FB	G	J	K	KN	LB	P	OD	R	RA	RB	RC	RD	TF	TR	UF	WB	Y	ZJ
	3.500	2 1/2"-12 x 3.500	3 1/2"-12 x 3.500	3 1/4"-12 x 3.500	3 1/4"-12 x 6.500	4.249	5.000		.375	3.000				.375													5.562						
	4.000	3"-12 x 4.000	4"-12 x 4.000	3 3/4"-12 x 4.000	3 3/4"-12 x 7.500	4.749	5.625		.438	3.375				.500													6.500						
8.000	4.500	3 1/4"-12 x 4.500	4 1/2"-12 x 4.500	4 1/4"-12 x 4.500	4 1/4"-12 x 8.250	5.249	6.375	1.000	.500	3.875	9.500	1 1/2	-24	.500	1.312	3.000	3.000	1.188	1.844	9.500	6.125	9.250	7.500	3.750	---	---	7.260	11.812	1.250	14.000	2.250	3.938	11.750
	5.000	3 1/2"-12 x 5.000	5"-12 x 5.000	4 3/4"-12 x 5.000	4 3/4"-12 x 9.000	5.749	6.875		.500	4.250				.500													7.750						
	5.500	4"-12 x 5.500	5 1/2"-12 x 5.500	5 1/4"-12 x 5.500	5 1/4"-12 x 10.000	6.249	7.375		.500	4.625				.500													8.260						
	4.500	3 1/4"-12 x 4.500	4 1/2"-12 x 4.500	4 1/4"-12 x 4.500	4 1/4"-12 x 8.250	5.249	6.375		.500	3.875				.500													7.260				2.937	4.750	15.062
	5.000	3 1/2"-12 x 5.000	5"-12 x 5.000	4 3/4"-12 x 5.000	4 3/4"-12 x 9.000	5.749	6.875		.500	4.250				.500													7.750				3.187	5.000	15.312
10.000	5.500	4"-12 x 5.500	5 1/2"-12 x 5.500	5 1/4"-12 x 5.500	5 1/4"-12 x 10.000	6.249	7.375	1.000	.500	4.625	12.625	2	-32	.500	1.812	3.688	3.688	1.094	1.656	12.125	8.500	11.750	9.625	5.291	3.775	---	8.260	15.875	1.125	19.000	3.187	5.000	15.312
	6.000	4 1/2"-12 x 6.000	6"-12 x 6.000	5 3/4"-12 x 6.000	5 3/4"-12 x 10.000	6.749	8.500		.625	5.125				.875													10.000				3.437	5.250	15.562
	7.000	5"-12 x 7.000	7"-12 x 7.000	6 1/2"-12 x 7.000	6 1/2"-12 x 10.000	7.749	9.437		.625	6.000				.875													10.500				3.437	5.250	15.562
	5.500	4"-12 x 5.500	5 1/2"-12 x 5.500	5 1/4"-12 x 5.500	5 1/4"-12 x 10.000	6.249	7.375		.500	4.625				.500													8.260				3.187	5.375	17.687
	6.000	4 1/2"-12 x 6.000	6"-12 x 6.000	5 3/4"-12 x 6.000	5 3/4"-12 x 10.000	6.749	8.500		.625	5.125				.875													10.000				3.437	5.625	17.937
12.000	7.000	5"-12 x 7.000	7"-12 x 7.000	6 1/2"-12 x 7.000	6 1/2"-12 x 10.000	7.749	9.437	1.000	.625	6.000	14.875	2 1/2	-32	.875	2.062	4.438	4.438	1.188	1.844	14.500	10.125	14.000	11.450	6.270	4.555	---	10.500	18.500	1.250	22.000	3.437	5.625	17.937
	8.000	5 3/4"-12 x 8.000	8"-12 x 8.000	7 1/2"-12 x 8.000	7 1/2"-12 x 12.000	8.749	10.500		.625	7.000				.875													12.000				3.437	5.625	17.937
	7.000	5"-12 x 7.000	7"-12 x 7.000	6 1/2"-12 x 7.000	6 1/2"-12 x 10.000	7.749	9.437			6.000																	10.500						
14.000	8.000	5 3/4"-12 x 8.000	8"-12 x 8.000	7 1/2"-12 x 8.000	7 1/2"-12 x 12.000	8.749	10.500	1.000	.625	7.000	17.125	3	-32	.875	2.312	4.875	4.875	1.188	1.844	15.625	10.875	16.000	13.260	7.485	6.143	4.409	12.000	21.000	1.250	25.000	3.437	5.625	19.062
	9.000	6 1/2"-12 x 9.000	9"-12 x 9.000	8 1/2"-12 x 9.000	8 1/2"-12 x 13.500	9.749	11.500			7.875																	13.000						
	10.000	7 1/4"-12 x 10.000	10"-12 x 10.000	9 1/2"-12 x 10.000	9 1/2"-12 x 15.000	10.749	12.500			8.625																	14.000						
BORE	MM	KM & KF	KD	KI	KA	B	BC	C	CS	D	E	EE	ES	F	FB	G	J	K	KN	LB	P	OD	R	RA	RB	RC	RD	TF	TR	UF	WB	Y	ZJ

FILE: 3.29_HP29L2.dwg REV: 02/09/2010

27650 Groesbeck Hwy Roseville, MI 48066-2759 Phone 586.775.7211 ∘ Fax 586.775.4545 Toll Free 800.526.7968 e-mail: sales@peninsularcylinders.com www.peninsularcylinders.com

"PUSH" & "PULL" Force Charts - Hydraulic Cylinders

for Peninsular - Series HP - High-Pressure, NFPA Hydraulic Cylinders

"PUSH" (EXTENDED STROKE) CYLINDER FORCES IN POUNDS

Cylinder Bore Size	Hydraulic Working Line Pressure (PSI)									Line Pressure
	500	750	1000	1250	1500	2000	2500	3000	5000	←
1 1/2	884	1325	1767	2209	2651	3534	4418	5301	8836	
2	1571	2356	3142	3927	4712	6283	7854	9425	15708	
2 1/2	2454	3682	4909	6136	7363	9818	12272	14726	24544	
3 1/4	4148	6222	8296	10370	12444	16592	20739	24887	41479	
4	6283	9425	12566	15708	18850	25133	31416	37699	62832	
5	9818	14726	19635	24544	29453	39270	49088	58905	98175	
6	14137	21206	28274	35343	42412	56549	70686	84823	141372	
8	25133	37699	50266	62832	75398	100531	125664	150797	251328	
10	39270	58905	78540	98175	117810	157080	196350	235620	392700	
12	56549	84823	113098	141372	169646	226195	282744	339293	565488	
14	76969	115454	153938	192423	230908	307877	384846	461815	769692	

Note: "Push" Forces in Pounds = (Cylinder Bore Diameter)^2 x .7854 x Line Pressure

"PULL" (RETRACTED STROKE) CYLINDER FORCES IN POUNDS

Cylinder Bore Size	Cylinder Rod DIA	Hydraulic Working Line Pressure (PSI)									Line Pressure
		500	750	1000	1250	1500	2000	2500	3000	5000	←
1 1/2	5/8	730	1095	1460	1825	2191	2921	3651	4381	7302	
	1	491	736	982	1227	1473	1964	2454	2945	4909	
2	1	1178	1767	2356	2945	3534	4712	5891	7069	11781	
	1 3/8	828	1243	1657	2071	2485	3313	4142	4970	8284	
2 1/2	1	2062	3093	4123	5154	6185	8247	10308	12370	20617	
	1 3/8	1712	2568	3424	4280	5136	6848	8560	10272	17119	
	1 3/4	1252	1878	2503	3129	3755	5007	6259	7510	12517	
3 1/4	1 3/8	3405	5108	6811	8514	10216	13622	17027	20433	34054	
	1 3/4	2945	4418	5891	7363	8836	11781	14726	17672	29453	
	2	2577	3866	5154	6443	7731	10308	12885	15463	25771	
4	1 3/4	5081	7621	10161	12701	15242	20322	25403	30483	50806	
	2	4712	7069	9425	11781	14137	18850	23562	28274	47124	
	2 1/2	3829	5743	7658	9572	11486	15315	19144	22973	38288	
5	2	8247	12370	16493	20617	24740	32987	41234	49480	82467	
	2 1/2	7363	11045	14726	18408	22089	29453	36816	44179	73631	
	3	6283	9425	12566	15708	18850	25133	31416	37699	62832	
	3 1/2	5007	7510	10014	12517	15021	20028	25035	30042	50069	

The "PULL" Chart is continued on the next page

Rev. 2/9/2010

"PUSH" & "PULL" Force Charts - Hydraulic Cylinders

for Peninsular - Series HP - High-Pressure, NFPA Hydraulic Cylinders

continued "PULL" (RETRACTED STROKE) CYLINDER FORCES IN POUNDS

Cylinder Bore Size	Cylinder Rod DIA	Hydraulic Working Line Pressure (PSI)									Line Pressure
		500	750	1000	1250	1500	2000	2500	3000	5000	←
6	2 1/2	11683	17524	23366	29207	35048	46731	58414	70097	116828	
	3	10603	15904	21206	26507	31809	42412	53015	63617	106029	
	3 1/2	9327	13990	18653	23317	27980	37307	46633	55960	93266	
	4	7854	11781	15708	19635	23562	31416	39270	47124	78540	
8	3 1/2	20322	30483	40644	50806	60967	81289	101611	121933	203222	
	4	18850	28274	37699	47124	56549	75398	94248	113098	188496	
	4 1/2	17181	25771	34361	42952	51542	68723	85903	103084	171806	
	5	15315	22973	30631	38288	45946	61261	76577	91892	153153	
	5 1/2	13254	19880	26507	33134	39761	53015	66268	79522	132536	
10	4 1/2	31318	46977	62636	78295	93953	125271	156589	187907	313178	
	5	29453	44179	58905	73631	88358	117810	147263	176715	294525	
	5 1/2	27391	41086	54782	68477	82172	109563	136954	164345	273908	
	6	25133	37699	50266	62832	75398	100531	125664	150797	251328	
	7	20028	30042	40055	50069	60083	80111	100139	120166	200277	
12	5 1/2	44670	67004	89339	111674	134009	178679	223348	268018	446696	
	6	42412	63617	84823	106029	127235	169646	212058	254470	424116	
	7	37307	55960	74613	93266	111920	149226	186533	223839	373065	
	8	31416	47124	62832	78540	94248	125664	157080	188496	314160	
14	7	57727	86590	115454	144317	173181	230908	288635	346361	577269	
	8	51836	77755	103673	129591	155509	207346	259182	311018	518364	
	9	45161	67741	90321	112901	135482	180642	225803	270963	451605	
	10	37699	56549	75398	94248	113098	150797	188496	226195	376992	

Note:

"Pull" Forces in Pounds = (Cylinder Bore Diameter)^2 - (Cylinder Rod Diameter)^2 x .7854 x Line Pressure

Rev. 2/9/2010

PENINSULAR®
CYLINDER CO.

Section 4

Table of Contents

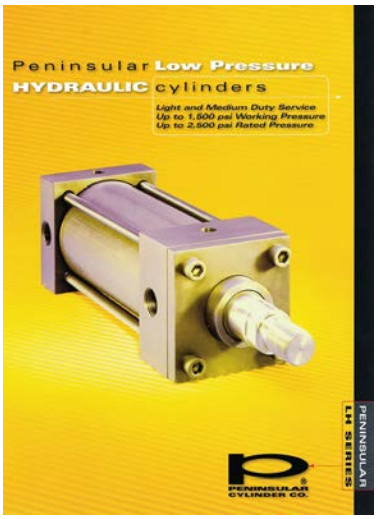

Model LH - *NFPA, Low Pressure Hydraulic Cylinders*

Our Yellow Model LH - FAB Brochure - contains information about :

- ***FEATURES, ADVANTAGES & BENEFITS of the Model LH Hydraulic Cylinder***
- ***HOW TO ORDER the Model LH NFPA Low Pressure Hydraulic Cylinder***

Model LH - Hydraulic Cylinder Dimensional Data

Page 4.00 LH 0 — No Mount Single Rod (Available for Front or Rear Flush Mounts) (MX0)	**Page 4.08** LH 8 — Head Tie Rod Extended (MX3)	**Page 4.18** LH 18 — Cap Square Flange (MF6)
Page 4.01 LH 1 — Foot Side Lugs (MS2)	**Page 4.11** LH 11 — Cap Tie Rod Extended (MX2)	**Page 4.21** LH 21 — Cap Detachable Eye (MP4)
Page 4.02 LH 2 — Head Trunnion (MT1)	**Page 4.12** LH 12 — Head & Cap Tie Rod Extended (MX1)	**Page 4.22** LH 22 — Cap-Fixed Spherical Eye (MP5)
Page 4.03 LH 3 — Cap Fixed Clevis (MP1)	**Page 4.13** LH 13 — End Angles (MS1)	**Page 4.24** LH 24 — Cap Detachable Clevis (MP2)
Page 4.04 LH 4 — Head Rectangular Flange (MF1)	**Page 4.14** LH 14 — End Lugs (MS7)	**Page 4.25** LH 25 — Cap Fixed Eye (MP3)
Page 4.05 LH 5 — Cap Rectangular Flange (MF2)	**Page 4.15** LH 15 — Centerline Lugs (MS3)	**Page 4.27** LH 27 — Cap Detachable Clevis (Equals MP1 envelope.)
Page 4.06 LH 6 — Intermediate Trunnion (MT4)	**Page 4.16** LH 16 — Side Tapped (MS4)	**Pages 4.28 & 4.29** — Cylinder "Push" & "Pull" Force Charts: (use to select the correct cylinder Bore Size)
Page 4.07 LH 7 — Cap Trunnion (MT2)	**Page 4.17** LH 17 — Head Square Flange (MF5)	

www.peninsularcylinders.com

1-800-526-7968

27650 Groesbeck Highway * Roseville, Michigan 48066-2759

(586) 775-7211 * (586) 775-4545 fax * email: sales@peninsularcylinders.com

REV. 2/9/2010

NO MOUNT

Low Pressure Steel Hydraulic Cylinder

Peninsular Mounting Style: **LH 0**

BORE	WORKING P.S.I.	RATED P.S.I.
1.50	1500	2500
2.00	1500	2500
2.50	1000	1500
3.25	1000	1500
4.00	1000	1500
5.00	800	1200
6.00	800	1200

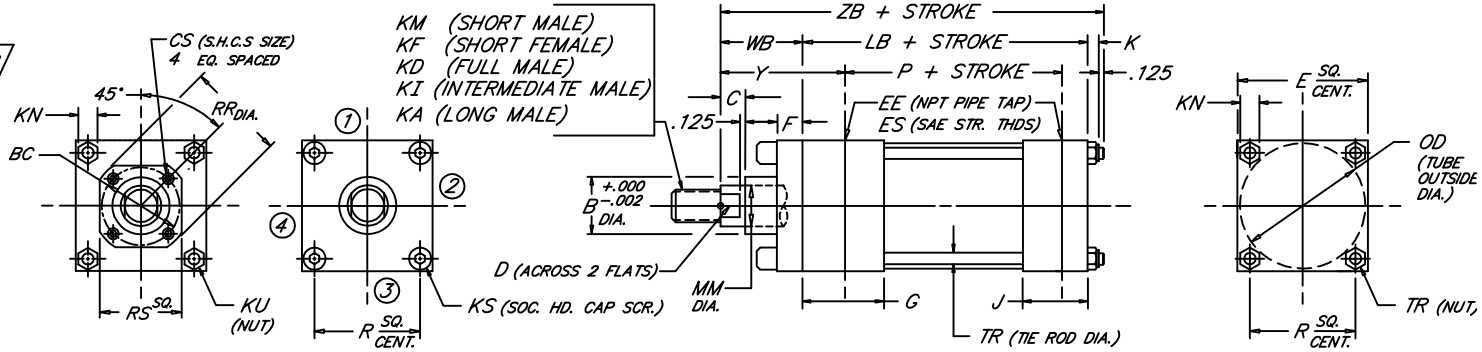

BORE	MM	ROD KM & KF	ROD KD	ROD KI	ROD KA	B	BC	C	CS	D	E	EE	ES	F	G	J	K	KN	KS	KU	LB	OD	P	R	RR	RS	TR	WB	Y	ZB
1.500	.625	7/16"-20 x .750	5/8"-18 x .750	1/2"-20 x .750	1/2"-20 x 1.125	1.124	---	.375	---	.500	2.000	3/8	-6	.375	1.500	1.000	.344	.500	.312	---	3.625	1.750	2.335	1.478	---	---	.312	1.000	1.875	5.094
	1.000	3/4"-16 x 1.125	1"-14 x 1.125	7/8"-14 x 1.125	7/8"-14 x 1.875	1.499		.500		.875																		1.375	2.250	5.469
2.000	.625	7/16"-20 x .750	5/8"-18 x .750	1/2"-20 x .750	1/2"-20 x 1.125	1.124	---	.375	---	.500	2.500	3/8	-6	.375	1.500	1.000	.406	.562	.375	---	3.625	2.375	2.335	1.966	---	---	.375	1.000	1.875	5.156
	1.000	3/4"-16 x 1.125	1"-14 x 1.125	7/8"-14 x 1.125	7/8"-14 x 1.875	1.499		.500		.875																		1.375	2.250	5.531
	1.375	1"-14 x 1.625	1 3/8"-12 x 1.625	1 1/4"-12 x 1.625	1 1/4"-12 x 2.500	1.999		.625		1.125																		1.625	2.500	5.781
2.500	.625	7/16"-20 x .750	5/8"-18 x .750	1/2"-20 x .750	1/2"-20 x 1.125	1.124	---	.375	---	.500	3.000	3/8	-6	.375	1.500	1.000	.406	.562	.375	---	3.750	2.875	2.460	2.320	---	---	.375	1.000	1.875	5.281
	1.000	3/4"-16 x 1.125	1"-14 x 1.125	7/8"-14 x 1.125	7/8"-14 x 1.875	1.499		.500		.875																		1.375	2.250	5.656
	1.375	1"-14 x 1.625	1 3/8"-12 x 1.625	1 1/4"-12 x 1.625	1 1/4"-12 x 2.500	1.999		.625		1.125																		1.625	2.500	5.906
	1.750	1 1/4"-12 x 2.000	1 3/4"-12 x 2.000	1 1/2"-12 x 2.000	1 1/2"-12 x 3.000	2.374		.750		1.500																		1.875	2.750	6.156
3.250	1.000	3/4"-16 x 1.125	1"-14 x 1.125	7/8"-14 x 1.125	7/8"-14 x 1.875	1.499	---	.500	---	.875	3.750	1/2	-8	.625	1.750	1.250	.531	.750	.500	---	4.250	3.625	2.750	2.942	---	---	.500	1.375	2.375	6.281
	1.375	1"-14 x 1.625	1 3/8"-12 x 1.625	1 1/4"-12 x 1.625	1 1/4"-12 x 2.500	1.999		.625		1.125																		1.625	2.625	6.531
	1.750	1 1/4"-12 x 2.000	1 3/4"-12 x 2.000	1 1/2"-12 x 2.000	1 1/2"-12 x 3.000	2.374		.750		1.500																		1.875	2.875	6.781
	2.000	1 1/2"-12 x 2.250	2"-12 x 2.250	1 3/4"-12 x 2.250	1 3/4"-12 x 3.500	2.624		.875		1.688																		2.000	3.000	6.906
4.000	1.000	3/4"-16 x 1.125	1"-14 x 1.125	7/8"-14 x 1.125	7/8"-14 x 1.875	1.499	2.562	.500	.250	.875	4.500	1/2	-8	.625	1.750	1.250	.531	.750	---	.500	4.250	4.375	2.750	3.469	2.969	2.500	.500	1.375	2.375	6.281
	1.375	1"-14 x 1.625	1 3/8"-12 x 1.625	1 1/4"-12 x 1.625	1 1/4"-12 x 2.500	1.999	2.562	.625	.250	1.125									---	.500					2.969	2.500		1.625	2.625	6.531
	1.750	1 1/4"-12 x 2.000	1 3/4"-12 x 2.000	1 1/2"-12 x 2.000	1 1/2"-12 x 3.000	2.374	3.267	.750	.312	1.500									---	.500					3.734	3.000		1.875	2.875	6.781
	2.000	1 1/2"-12 x 2.250	2"-12 x 2.250	1 3/4"-12 x 2.250	1 3/4"-12 x 3.500	2.624	---	.875	---	1.688									.500	---					---	---		2.000	3.000	6.906
	2.500	1 7/8"-12 x 3.000	2 1/2"-12 x 3.000	2 1/4"-12 x 3.000	2 1/4"-12 x 4.500	3.124	---	1.000	---	2.062									.500	---					---	---		2.250	3.250	7.156
5.000	1.000	3/4"-16 x 1.125	1"-14 x 1.125	7/8"-14 x 1.125	7/8"-14 x 1.875	1.499	2.562	.500	.250	.875	5.500	1/2	-8	.625	1.750	1.250	.656	.938	---	.625	4.500	5.375	3.000	4.285	2.969	2.500	.625	1.375	2.375	6.656
	1.375	1"-14 x 1.625	1 3/8"-12 x 1.625	1 1/4"-12 x 1.625	1 1/4"-12 x 2.500	1.999	2.562	.625	.250	1.125									---	.625					2.969	2.500		1.625	2.625	6.906
	1.750	1 1/4"-12 x 2.000	1 3/4"-12 x 2.000	1 1/2"-12 x 2.000	1 1/2"-12 x 3.000	2.374	3.267	.750	.312	1.500									---	.625					3.734	3.000		1.875	2.875	7.156
	2.000	1 1/2"-12 x 2.250	2"-12 x 2.250	1 3/4"-12 x 2.250	1 3/4"-12 x 3.500	2.624	3.812	.875	.312	1.688									---	.625					4.312	3.750		2.000	3.000	7.281
	2.500	1 7/8"-12 x 3.000	2 1/2"-12 x 3.000	2 1/4"-12 x 3.000	2 1/4"-12 x 4.500	3.124	3.812	1.000	.312	2.062									---	.625					4.312	3.750		2.250	3.250	7.531
	3.000	2 1/4"-12 x 3.500	3"-12 x 3.500	2 3/4"-12 x 3.500	2 3/4"-12 x 5.500	3.749	---	1.000	---	2.625									.625	---					---	---		2.250	3.250	7.531
	3.500	2 1/2"-12 x 3.500	3 1/2"-12 x 3.500	3 1/4"-12 x 3.500	3 1/4"-12 x 6.500	4.249	---	1.000	---	3.000									.625	---					---	---		2.250	3.250	7.531
6.000	1.375	1"-14 x 1.625	1 3/8"-12 x 1.625	1 1/4"-12 x 1.625	1 1/4"-12 x 2.500	1.999	3.267	.625	.312	1.125	6.500	3/4	-12	.625	2.000	1.500	.656	.938	---	.625	5.000	6.375	3.250	4.992	3.734	3.000	.625	1.625	2.750	7.406
	1.750	1 1/4"-12 x 2.000	1 3/4"-12 x 2.000	1 1/2"-12 x 2.000	1 1/2"-12 x 3.000	2.374	3.267	.750	.312	1.500				.625					---	.625					3.734	3.000		1.875	3.000	7.656
	2.000	1 1/2"-12 x 2.250	2"-12 x 2.250	1 3/4"-12 x 2.250	1 3/4"-12 x 3.500	2.624	3.812	.875	.312	1.688				.625					---	.625					4.312	3.750		2.000	3.125	7.781
	2.500	1 7/8"-12 x 3.000	2 1/2"-12 x 3.000	2 1/4"-12 x 3.000	2 1/4"-12 x 4.500	3.124	3.812	1.000	.312	2.062				.625					---	.625					4.312	3.750		2.250	3.375	8.031
	3.000	2 1/4"-12 x 3.500	3"-12 x 3.500	2 3/4"-12 x 3.500	2 3/4"-12 x 5.500	3.749	4.700	1.000	.375	2.625				.625					---	.625					5.562	4.500		2.250	3.375	8.031
	3.500	2 1/2"-12 x 3.500	3 1/2"-12 x 3.500	3 1/4"-12 x 3.500	3 1/4"-12 x 6.500	4.249	5.200	1.000	.375	3.000				.625					---	.625					6.062	5.000		2.250	3.375	8.031
	4.000	3"-12 x 4.000	4"-12 x 4.000	3 3/4"-12 x 4.000	3 3/4"-12 x 7.500	4.749	---	1.000	---	3.375				.750					.625	---					---	---		2.250	3.375	8.031
BORE	MM	KM & KF	KD	KI	KA	B	BC	C	CS	D	E	EE	ES	F	G	J	K	KN	KS	KU	LB	OD	P	R	RR	RS	TR	WB	Y	ZB

NEVA DESIGN

4.00

FILE: 4.00_LH00S2.dwg REV: 02/09/2010

27650 Groesbeck Hwy • Roseville, MI 48066-2759 • Phone 586.775.7211 • Fax 586.775.4545 • Toll Free 800.526.7968 • e-mail: sales@peninsularcylinders.com • www.peninsularcylinders.com

FOOT SIDE LUGS

Low Pressure Steel Hydraulic Cylinder

BORE	1.50	2.00	2.50	3.25	4.00	5.00	6.00
WORKING P.S.I.	1500	1500	1000	1000	1000	800	800
RATED P.S.I.	2500	2500	1500	1500	1500	1200	1200

Peninsular Mounting Style: **LH 1**

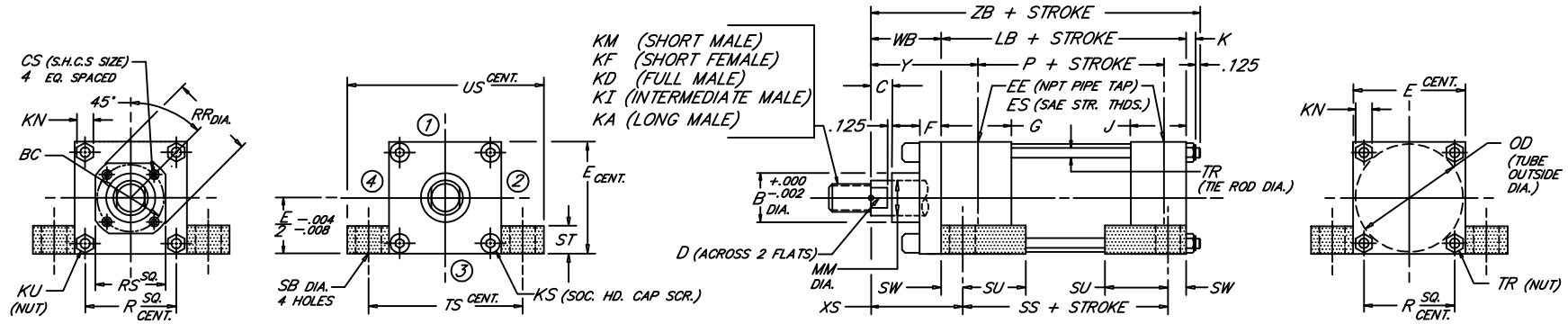

BORE	MM	KM & KF	KD	KI	KA	B	BC	C	CS	D	E	EE	ES	F	G	J	K	KN	KS	KU	LB	OD	P	R	RR	RS	SB	SS	ST	SU	SW	TR	TS	US	WB	XS	Y	ZB
		ROD	ROD THREAD X LENGTH									NPT/SAE																									
1.500	.625	7/16"-20 x .750	5/8"-18 x .750	1/2"-20 x .750	1/2"-20 x 1.125	1.124	---	.375	---	.500	2.000	3/8	-6	.375	1.500	1.000	.344	.500	.312	---	3.625	1.750	2.335	1.478	---	---	.438	2.875	.500	.938	.375	.312	2.750	3.500	1.000	1.375	1.875	5.094
	1.000	3/4"-16 x 1.125	1"-14 x 1.125	7/8"-14 x 1.125	7/8"-14 x 1.875	1.499		.500		.875																									1.375	1.750	2.250	5.469
2.000	.625	7/16"-20 x .750	5/8"-18 x .750	1/2"-20 x .750	1/2"-20 x 1.125	1.124	---	.375	---	.500	2.500	3/8	-6	.375	1.500	1.000	.406	.562	.375	---	3.625	2.375	2.335	1.966	---	---	.438	2.875	.500	.938	.375	.375	3.250	4.000	1.000	1.375	1.875	5.156
	1.000	3/4"-16 x 1.125	1"-14 x 1.125	7/8"-14 x 1.125	7/8"-14 x 1.875	1.499		.500		.875																									1.375	1.750	2.250	5.531
	1.375	1"-14 x 1.625	1 3/8"-12 x 1.625	1 1/4"-12 x 1.625	1 1/4"-12 x 2.500	1.999		.625		1.125																									1.625	2.000	2.500	5.781
2.500	.625	7/16"-20 x .750	5/8"-18 x .750	1/2"-20 x .750	1/2"-20 x 1.125	1.124	---	.375	---	.500	3.000	3/8	-6	.375	1.500	1.000	.406	.562	.375	---	3.750	2.875	2.460	2.320	---	---	.438	3.000	.500	.938	.375	.375	3.750	4.500	1.000	1.375	1.875	5.281
	1.000	3/4"-16 x 1.125	1"-14 x 1.125	7/8"-14 x 1.125	7/8"-14 x 1.875	1.499		.500		.875																									1.375	1.750	2.250	5.656
	1.375	1"-14 x 1.625	1 3/8"-12 x 1.625	1 1/4"-12 x 1.625	1 1/4"-12 x 2.500	1.999		.625		1.125																									1.625	2.000	2.500	5.906
	1.750	1 1/4"-12 x 2.000	1 3/4"-12 x 2.000	1 1/2"-12 x 2.000	1 1/2"-12 x 3.000	2.374		.750		1.500																									1.875	2.250	2.750	6.156
3.250	1.000	3/4"-16 x 1.125	1"-14 x 1.125	7/8"-14 x 1.125	7/8"-14 x 1.875	1.499	---	.500	---	.875	3.750	1/2	-8	.625	1.750	1.250	.531	.750	.500	---	4.250	3.625	2.750	2.942	---	---	.562	3.250	.750	1.250	.500	.500	4.750	5.750	1.375	1.875	2.375	6.281
	1.375	1"-14 x 1.625	1 3/8"-12 x 1.625	1 1/4"-12 x 1.625	1 1/4"-12 x 2.500	1.999		.625		1.125																									1.625	2.125	2.625	6.531
	1.750	1 1/4"-12 x 2.000	1 3/4"-12 x 2.000	1 1/2"-12 x 2.000	1 1/2"-12 x 3.000	2.374		.750		1.500																									1.875	2.375	2.875	6.781
	2.000	1 1/2"-12 x 2.250	2"-12 x 2.250	1 3/4"-12 x 2.250	1 3/4"-12 x 3.500	2.624		.875		1.688																									2.000	2.500	3.000	6.906
4.000	1.000	3/4"-16 x 1.125	1"-14 x 1.125	7/8"-14 x 1.125	7/8"-14 x 1.875	1.499	2.562	.500	.250	.875	4.500	1/2	-8	.625	1.750	1.250	.531	.750	---	.500	4.250	4.375	2.750	3.469	2.969	2.500	.562	3.250	.750	1.250	.500	.500	5.500	6.500	1.375	1.875	2.375	6.281
	1.375	1"-14 x 1.625	1 3/8"-12 x 1.625	1 1/4"-12 x 1.625	1 1/4"-12 x 2.500	1.999	2.562	.625	.250	1.125									---	.500					2.969	2.500									1.625	2.125	2.625	6.531
	1.750	1 1/4"-12 x 2.000	1 3/4"-12 x 2.000	1 1/2"-12 x 2.000	1 1/2"-12 x 3.000	2.374	3.267	.750	.312	1.500									---	.500					3.734	3.000									1.875	2.375	2.875	6.781
	2.000	1 1/2"-12 x 2.250	2"-12 x 2.250	1 3/4"-12 x 2.250	1 3/4"-12 x 3.500	2.624	---	.875	---	1.688									.500	---					---	---									2.000	2.500	3.000	6.906
	2.500	1 7/8"-12 x 3.000	2 1/2"-12 x 3.000	2 1/4"-12 x 3.000	2 1/4"-12 x 4.500	3.124	---	1.000	---	2.062									.500	---					---	---									2.250	2.750	3.250	7.156
5.000	1.000	3/4"-16 x 1.125	1"-14 x 1.125	7/8"-14 x 1.125	7/8"-14 x 1.875	1.499	2.562	.500	.250	.875	5.500	1/2	-8	.625	1.750	1.250	.656	.938	---	.625	4.500	5.375	3.000	4.285	2.969	2.500	.812	3.125	1.000	1.562	.6875	.625	6.875	8.250	1.375	2.062	2.375	6.656
	1.375	1"-14 x 1.625	1 3/8"-12 x 1.625	1 1/4"-12 x 1.625	1 1/4"-12 x 2.500	1.999	2.562	.625	.250	1.125									---	.625					2.969	2.500									1.625	2.312	2.625	6.906
	1.750	1 1/4"-12 x 2.000	1 3/4"-12 x 2.000	1 1/2"-12 x 2.000	1 1/2"-12 x 3.000	2.374	3.267	.750	.312	1.500									---	.625					3.734	3.000									1.875	2.562	2.875	7.156
	2.000	1 1/2"-12 x 2.250	2"-12 x 2.250	1 3/4"-12 x 2.250	1 3/4"-12 x 3.500	2.624	3.812	.875	.312	1.688									---	.625					4.312	3.750									2.000	2.688	3.000	7.281
	2.500	1 7/8"-12 x 3.000	2 1/2"-12 x 3.000	2 1/4"-12 x 3.000	2 1/4"-12 x 4.500	3.124	3.812	1.000	.312	2.062									---	.625					4.312	3.750									2.250	2.938	3.250	7.531
	3.000	2 1/4"-12 x 3.500	3"-12 x 3.500	2 3/4"-12 x 3.500	2 3/4"-12 x 5.500	3.749	---	1.000	---	2.625									.625	---					---	---									2.250	2.938	3.250	7.531
	3.500	2 1/2"-12 x 3.500	3 1/2"-12 x 3.500	3 1/4"-12 x 3.500	3 1/4"-12 x 6.500	4.249	---	1.000	---	3.000									.625	---					---	---									2.250	2.938	3.250	7.531
6.000	1.375	1"-14 x 1.625	1 3/8"-12 x 1.625	1 1/4"-12 x 1.625	1 1/4"-12 x 2.500	1.999	3.267	.625	.312	1.125	6.500	3/4	-12	.625	2.000	1.500	.656	.938	---	.625	5.000	6.375	3.250	4.992	3.734	3.000	.812	3.625	1.000	1.562	.6875	.625	7.875	9.250	1.625	2.312	2.750	7.406
	1.750	1 1/4"-12 x 2.000	1 3/4"-12 x 2.000	1 1/2"-12 x 2.000	1 1/2"-12 x 3.000	2.374	3.267	.750	.312	1.500				.625					---	.625					3.734	3.000									1.875	2.562	3.000	7.656
	2.000	1 1/2"-12 x 2.250	2"-12 x 2.250	1 3/4"-12 x 2.250	1 3/4"-12 x 3.500	2.624	3.812	.875	.312	1.688				.625					---	.625					4.312	3.750									2.000	2.688	3.125	7.781
	2.500	1 7/8"-12 x 3.000	2 1/2"-12 x 3.000	2 1/4"-12 x 3.000	2 1/4"-12 x 4.500	3.124	3.812	1.000	.312	2.062				.625					---	.625					4.312	3.750									2.250	2.938	3.375	8.031
	3.000	2 1/4"-12 x 3.500	3"-12 x 3.500	2 3/4"-12 x 3.500	2 3/4"-12 x 5.500	3.749	4.700	1.000	.375	2.625				.625					---	.625					5.562	4.500									2.250	2.938	3.375	8.031
	3.500	2 1/2"-12 x 3.500	3 1/2"-12 x 3.500	3 1/4"-12 x 3.500	3 1/4"-12 x 6.500	4.249	5.200	1.000	.375	3.000				.625					---	.625					6.062	5.000									2.250	2.938	3.375	8.031
	4.000	3"-12 x 4.000	4"-12 x 4.000	3 3/4"-12 x 4.000	3 3/4"-12 x 7.500	4.749	---	1.000	---	3.375				.750					.625	---					---	---									2.250	2.938	3.375	8.031
BORE	MM	KM & KF	KD	KI	KA	B	BC	C	CS	D	E	EE	ES	F	G	J	K	KN	KS	KU	LB	OD	P	R	RR	RS	SB	SS	ST	SU	SW	TR	TS	US	WB	XS	Y	ZB

4.01

NEVA DESIGN

FILE: 4.00_LH01S2.dwg REV: 02/09/2010

27650 Groesbeck Hwy • Roseville, MI 48066-2759 • Phone 586.775.7211 • Fax 586.775.4545 • Toll Free 800.526.7968 • e-mail: sales@peninsularcylinders.com • www.peninsularcylinders.com

HEAD TRUNNION

Low Pressure Steel Hydraulic Cylinder

Peninsular Mounting Style: **LH 2**

BORE	WORKING P.S.I.	RATED P.S.I.
1.50	1500	2500
2.00	1500	2500
2.50	1000	1500
3.25	1000	1500
4.00	1000	1500
5.00	800	1200
6.00	800	1200

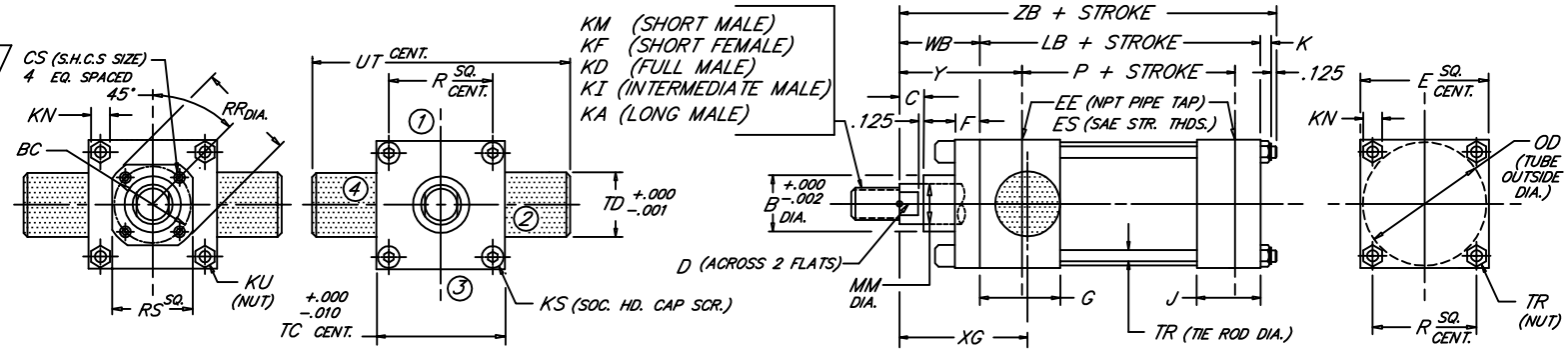

BORE	MM	KM & KF	KD	KI	KA	B	BC	C	CS	D	E	EE	ES	F	G	J	K	KN	KS	KU	LB	OD	P	R	RR	RS	TC	TD	TR	UT	WB	XG	Y	ZB
	ROD	ROD THREAD X LENGTH										NPT/SAE																					
1.500	.625	7/16"-20 x .750	5/8"-18 x .750	1/2"-20 x .750	1/2"-20 x 1.125	1.124	---	.375	---	.500	2.000	3/8	-6	.375	1.500	1.000	.344	.500	.312	---	3.625	1.750	2.335	1.478	---	---	2.000	1.000	.312	4.000	1.000	1.750	1.875	5.094
	1.000	3/4"-16 x 1.125	1"-14 x 1.125	7/8"-14 x 1.125	7/8"-14 x 1.875	1.499		.500		.875																					1.375	2.125	2.250	5.469
2.000	.625	7/16"-20 x .750	5/8"-18 x .750	1/2"-20 x .750	1/2"-20 x 1.125	1.124	---	.375	---	.500	2.500	3/8	-6	.375	1.500	1.000	.406	.562	.375	---	3.625	2.375	2.335	1.966	---	---	2.500	1.000	.375	4.500	1.000	1.750	1.875	5.156
	1.000	3/4"-16 x 1.125	1"-14 x 1.125	7/8"-14 x 1.125	7/8"-14 x 1.875	1.499		.500		.875																					1.375	2.125	2.250	5.531
	1.375	1"-14 x 1.625	1 3/8"-12 x 1.625	1 1/4"-12 x 1.625	1 1/4"-12 x 2.500	1.999		.625		1.125																					1.625	2.375	2.500	5.781
2.500	.625	7/16"-20 x .750	5/8"-18 x .750	1/2"-20 x .750	1/2"-20 x 1.125	1.124	---	.375	---	.500	3.000	3/8	-6	.375	1.500	1.000	.406	.562	.375	---	3.750	2.875	2.460	2.320	---	---	3.000	1.000	.375	5.000	1.000	1.750	1.875	5.281
	1.000	3/4"-16 x 1.125	1"-14 x 1.125	7/8"-14 x 1.125	7/8"-14 x 1.875	1.499		.500		.875																					1.375	2.125	2.250	5.656
	1.375	1"-14 x 1.625	1 3/8"-12 x 1.625	1 1/4"-12 x 1.625	1 1/4"-12 x 2.500	1.999		.625		1.125																					1.625	2.375	2.500	5.906
	1.750	1 1/4"-12 x 2.000	1 3/4"-12 x 2.000	1 1/2"-12 x 2.000	1 1/2"-12 x 3.000	2.374		.750		1.500																					1.875	2.625	2.750	6.156
3.250	1.000	3/4"-16 x 1.125	1"-14 x 1.125	7/8"-14 x 1.125	7/8"-14 x 1.875	1.499	---	.500	---	.875	3.750	1/2	-8	.625	1.750	1.250	.531	.750	.500	---	4.250	3.625	2.750	2.942	---	---	3.750	1.000	.500	5.750	1.375	2.250	2.375	6.281
	1.375	1"-14 x 1.625	1 3/8"-12 x 1.625	1 1/4"-12 x 1.625	1 1/4"-12 x 2.500	1.999		.625		1.125																					1.625	2.500	2.625	6.531
	1.750	1 1/4"-12 x 2.000	1 3/4"-12 x 2.000	1 1/2"-12 x 2.000	1 1/2"-12 x 3.000	2.374		.750		1.500																					1.875	2.750	2.875	6.781
	2.000	1 1/2"-12 x 2.250	2"-12 x 2.250	1 3/4"-12 x 2.250	1 3/4"-12 x 3.500	2.624		.875		1.688																					2.000	2.875	3.000	6.906
4.000	1.000	3/4"-16 x 1.125	1"-14 x 1.125	7/8"-14 x 1.125	7/8"-14 x 1.875	1.499	2.562	.500	.250	.875	4.500	1/2	-8	.625	1.750	1.250	.531	.750	---	.500	4.250	4.375	2.750	3.469	2.969	2.500	4.500	1.000	.500	6.500	1.375	2.250	2.375	6.281
	1.375	1"-14 x 1.625	1 3/8"-12 x 1.625	1 1/4"-12 x 1.625	1 1/4"-12 x 2.500	1.999	2.562	.625	.250	1.125									---	.500					2.969	2.500					1.625	2.500	2.625	6.531
	1.750	1 1/4"-12 x 2.000	1 3/4"-12 x 2.000	1 1/2"-12 x 2.000	1 1/2"-12 x 3.000	2.374	3.267	.750	.312	1.500									---	.500					3.734	3.000					1.875	2.750	2.875	6.781
	2.000	1 1/2"-12 x 2.250	2"-12 x 2.250	1 3/4"-12 x 2.250	1 3/4"-12 x 3.500	2.624	---	.875	---	1.688									.500	---					---	---					2.000	2.875	3.000	6.906
	2.500	1 7/8"-12 x 3.000	2 1/2"-12 x 3.000	2 1/4"-12 x 3.000	2 1/4"-12 x 4.500	3.124	---	1.000	---	2.062									.500	---					---	---					2.250	3.125	3.250	7.156
5.000	1.000	3/4"-16 x 1.125	1"-14 x 1.125	7/8"-14 x 1.125	7/8"-14 x 1.875	1.499	2.562	.500	.250	.875	5.500	1/2	-8	.625	1.750	1.250	.656	.938	---	.625	4.500	5.375	3.000	4.285	2.969	2.500	5.500	1.000	.625	7.500	1.375	2.250	2.375	6.656
	1.375	1"-14 x 1.625	1 3/8"-12 x 1.625	1 1/4"-12 x 1.625	1 1/4"-12 x 2.500	1.999	2.562	.625	.250	1.125									---	.625					2.969	2.500					1.625	2.500	2.625	6.906
	1.750	1 1/4"-12 x 2.000	1 3/4"-12 x 2.000	1 1/2"-12 x 2.000	1 1/2"-12 x 3.000	2.374	3.267	.750	.312	1.500									---	.625					3.734	3.000					1.875	2.750	2.875	7.156
	2.000	1 1/2"-12 x 2.250	2"-12 x 2.250	1 3/4"-12 x 2.250	1 3/4"-12 x 3.500	2.624	3.812	.875	.312	1.688									---	.625					4.312	3.750					2.000	2.875	3.000	7.281
	2.500	1 7/8"-12 x 3.000	2 1/2"-12 x 3.000	2 1/4"-12 x 3.000	2 1/4"-12 x 4.500	3.124	3.812	1.000	.312	2.062									---	.625					4.312	3.750					2.250	3.125	3.250	7.531
	3.000	2 1/4"-12 x 3.500	3"-12 x 3.500	2 3/4"-12 x 3.500	2 3/4"-12 x 5.500	3.749	---	1.000	---	2.625									.625	---					---	---					2.250	3.125	3.250	7.531
	3.500	2 1/2"-12 x 3.500	3 1/2"-12 x 3.500	3 1/4"-12 x 3.500	3 1/4"-12 x 6.500	4.249	---	1.000	---	3.000									.625	---					---	---					2.250	3.125	3.250	7.531
6.000	1.375	1"-14 x 1.625	1 3/8"-12 x 1.625	1 1/4"-12 x 1.625	1 1/4"-12 x 2.500	1.999	3.267	.625	.312	1.125	6.500	3/4	-12	.625	2.000	1.500	.656	.938	---	.625	5.000	6.375	3.250	4.992	3.734	3.000	6.500	1.375	.625	9.250	1.625	2.625	2.750	7.406
	1.750	1 1/4"-12 x 2.000	1 3/4"-12 x 2.000	1 1/2"-12 x 2.000	1 1/2"-12 x 3.000	2.374	3.267	.750	.312	1.500				.625					---	.625					3.734	3.000					1.875	2.875	3.000	7.656
	2.000	1 1/2"-12 x 2.250	2"-12 x 2.250	1 3/4"-12 x 2.250	1 3/4"-12 x 3.500	2.624	3.812	.875	.312	1.688				.625					---	.625					4.312	3.750					2.000	3.000	3.125	7.781
	2.500	1 7/8"-12 x 3.000	2 1/2"-12 x 3.000	2 1/4"-12 x 3.000	2 1/4"-12 x 4.500	3.124	3.812	1.000	.312	2.062				.625					---	.625					4.312	3.750					2.250	3.250	3.375	8.031
	3.000	2 1/4"-12 x 3.500	3"-12 x 3.500	2 3/4"-12 x 3.500	2 3/4"-12 x 5.500	3.749	4.700	1.000	.375	2.625				.625					---	.625					5.562	4.500					2.250	3.250	3.375	8.031
	3.500	2 1/2"-12 x 3.500	3 1/2"-12 x 3.500	3 1/4"-12 x 3.500	3 1/4"-12 x 6.500	4.249	5.200	1.000	.375	3.000				.625					---	.625					6.062	5.000					2.250	3.250	3.375	8.031
	4.000	3"-12 x 4.000	4"-12 x 4.000	3 3/4"-12 x 4.000	3 3/4"-12 x 7.500	4.749	---	1.000	---	3.375				.750					.625	---					---	---					2.250	3.250	3.375	8.031
BORE	MM	KM & KF	KD	KI	KA	B	BC	C	CS	D	E	EE	ES	F	G	J	K	KN	KS	KU	LB	OD	P	R	RR	RS	TC	TD	TR	UT	WB	XG	Y	ZB

NEVA DESIGN

4.02

FILE: 4.02_LH2S2.dwg REV: 02/09/2010

27650 Groesbeck Hwy • Roseville, MI 48066-2759 • Phone 586.775.7211 • Fax 586.775.4545 • Toll Free 800.526.7968 • e-mail: sales@peninsularcylinders.com • www.peninsularcylinders.com

CAP FIXED CLEVIS

Low Pressure Steel Hydraulic Cylinder

BORE	1.50	2.00	2.50	3.25	4.00	5.00	6.00
WORKING P.S.I.	1500	1500	1000	1000	1000	800	800
RATED P.S.I.	2500	2500	1500	1500	1500	1200	1200

Peninsular Mounting Style: **LH 3**

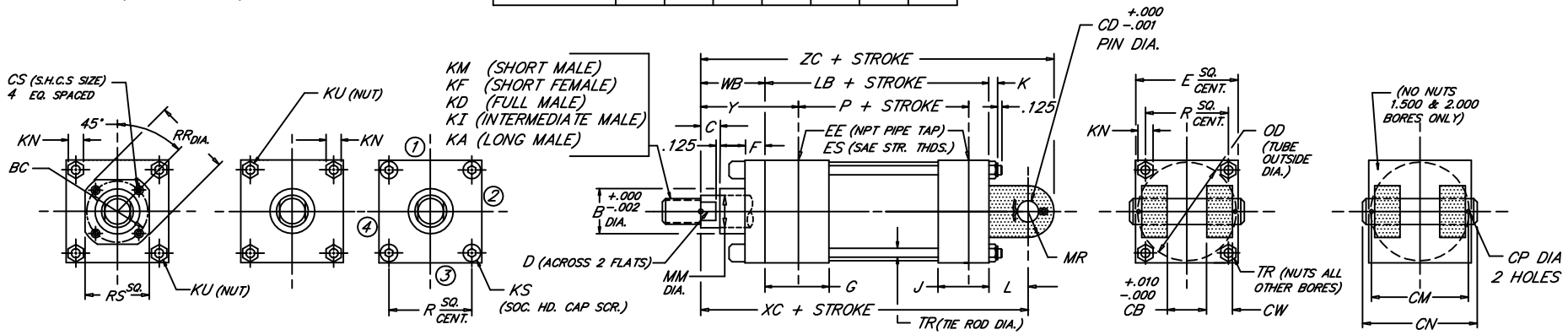

BORE	ROD MM	ROD THREAD X LENGTH KM & KF	KD	KI	KA	B	BC	C	CB	CD	CM	CN	CP	CS	CW	D	E	EE	ES	F	G	J	K	KN	KS	KU	L	LB	MR	OD	P	R	RR	RS	TR	WB	XC	Y	ZC
1.500	.625	7/16"-20 x .750	5/8"-18 x .750	1/2"-20 x .750	1/2"-20 x 1.125	1.124	---	.375	.765	.500	1.938	2.281	.106	---	.500	.500	2.000	3/8	-6	.375	1.500	1.000	.344	.500	---	.312	.750	3.625	.500	1.750	2.335	1.478	---	---	.312	1.000	5.375	1.875	5.875
	1.000	3/4"-16 x 1.125	1"-14 x 1.125	7/8"-14 x 1.125	7/8"-14 x 1.875	1.499		.500								.875																				1.375	5.750	2.250	6.250
2.000	.625	7/16"-20 x .750	5/8"-18 x .750	1/2"-20 x .750	1/2"-20 x 1.125	1.124	---	.375	.765	.500	1.938	2.281	.106	---	.500	.500	2.500	3/8	-6	.375	1.500	1.000	.406	.562	---	.375	.750	3.625	.500	2.375	2.335	1.966	---	---	.375	1.000	5.375	1.875	5.875
	1.000	3/4"-16 x 1.125	1"-14 x 1.125	7/8"-14 x 1.125	7/8"-14 x 1.875	1.499		.500								.875																				1.375	5.750	2.250	6.250
	1.375	1"-14 x 1.625	1 3/8"-12 x 1.625	1 1/4"-12 x 1.625	1 1/4"-12 x 2.500	1.999		.625								1.125																				1.625	6.000	2.500	6.500
2.500	.625	7/16"-20 x .750	5/8"-18 x .750	1/2"-20 x .750	1/2"-20 x 1.125	1.124	---	.375	.765	.500	1.938	2.281	.106	---	.500	.500	3.000	3/8	-6	.375	1.500	1.000	.406	.562	.375	---	.750	3.750	.500	2.875	2.460	2.320	---	---	.375	1.000	5.500	1.875	6.000
	1.000	3/4"-16 x 1.125	1"-14 x 1.125	7/8"-14 x 1.125	7/8"-14 x 1.875	1.499		.500								.875																				1.375	5.875	2.250	6.375
	1.375	1"-14 x 1.625	1 3/8"-12 x 1.625	1 1/4"-12 x 1.625	1 1/4"-12 x 2.500	1.999		.625								1.125																				1.625	6.125	2.500	6.625
	1.750	1 1/4"-12 x 2.000	1 3/4"-12 x 2.000	1 1/2"-12 x 2.000	1 1/2"-12 x 3.000	2.374		.750								1.500																				1.875	6.375	2.750	6.875
3.250	1.000	3/4"-16 x 1.125	1"-14 x 1.125	7/8"-14 x 1.125	7/8"-14 x 1.875	1.499	---	.500	1.265	.750	2.719	3.094	.140	---	.625	.875	3.750	1/2	-8	.625	1.750	1.250	.531	.750	.500	---	1.250	4.250	.750	3.625	2.750	2.942	---	---	.500	1.375	6.875	2.375	7.625
	1.375	1"-14 x 1.625	1 3/8"-12 x 1.625	1 1/4"-12 x 1.625	1 1/4"-12 x 2.500	1.999		.625								1.125																				1.625	7.125	2.625	7.875
	1.750	1 1/4"-12 x 2.000	1 3/4"-12 x 2.000	1 1/2"-12 x 2.000	1 1/2"-12 x 3.000	2.374		.750								1.500																				1.875	7.375	2.875	8.125
	2.000	1 1/2"-12 x 2.250	2"-12 x 2.250	1 3/4"-12 x 2.250	1 3/4"-12 x 3.500	2.624		.875								1.688																				2.000	7.500	3.000	8.250
4.000	1.000	3/4"-16 x 1.125	1"-14 x 1.125	7/8"-14 x 1.125	7/8"-14 x 1.875	1.499	2.562	.500	1.265	.750	2.719	3.094	.140	.250	.625	.875	4.500	1/2	-8	.625	1.750	1.250	.531	.750	---	.500	1.250	4.250	.750	4.375	2.750	3.469	2.969	2.500	.500	1.375	6.875	2.375	7.625
	1.375	1"-14 x 1.625	1 3/8"-12 x 1.625	1 1/4"-12 x 1.625	1 1/4"-12 x 2.500	1.999	2.562	.625						.250		1.125									---	.500							2.969	2.500		1.625	7.125	2.625	7.875
	1.750	1 1/4"-12 x 2.000	1 3/4"-12 x 2.000	1 1/2"-12 x 2.000	1 1/2"-12 x 3.000	2.374	3.267	.750						.312		1.500									---	.500							3.734	3.000		1.875	7.375	2.875	8.125
	2.000	1 1/2"-12 x 2.250	2"-12 x 2.250	1 3/4"-12 x 2.250	1 3/4"-12 x 3.500	2.624	---	.875						---		1.688									.500	---							---	---		2.000	7.500	3.000	8.250
	2.500	1 7/8"-12 x 3.000	2 1/2"-12 x 3.000	2 1/4"-12 x 3.000	2 1/4"-12 x 4.500	3.124	---	1.000						---		2.062									.500	---							---	---		2.250	7.750	3.250	8.500
5.000	1.000	3/4"-16 x 1.125	1"-14 x 1.125	7/8"-14 x 1.125	7/8"-14 x 1.875	1.499	2.562	.500	1.265	.750	2.719	3.094	.140	.250	.625	.875	5.500	1/2	-8	.625	1.750	1.250	.656	.938	---	.625	1.250	4.500	.750	5.375	3.000	4.285	2.969	2.500	.625	1.375	7.125	2.375	7.875
	1.375	1"-14 x 1.625	1 3/8"-12 x 1.625	1 1/4"-12 x 1.625	1 1/4"-12 x 2.500	1.999	2.562	.625						.250		1.125									---	.625							2.969	2.500		1.625	7.375	2.625	8.125
	1.750	1 1/4"-12 x 2.000	1 3/4"-12 x 2.000	1 1/2"-12 x 2.000	1 1/2"-12 x 3.000	2.374	3.267	.750						.312		1.500									---	.625							3.734	3.000		1.875	7.625	2.875	8.375
	2.000	1 1/2"-12 x 2.250	2"-12 x 2.250	1 3/4"-12 x 2.250	1 3/4"-12 x 3.500	2.624	3.812	.875						.312		1.688									---	.625							4.312	3.750		2.000	7.750	3.000	8.500
	2.500	1 7/8"-12 x 3.000	2 1/2"-12 x 3.000	2 1/4"-12 x 3.000	2 1/4"-12 x 4.500	3.124	3.812	1.000						.312		2.062									---	.625							4.312	3.750		2.250	8.000	3.250	8.750
	3.000	2 1/4"-12 x 3.500	3"-12 x 3.500	2 3/4"-12 x 3.500	2 3/4"-12 x 5.500	3.749	---	1.000						---		2.625									.625	---							---	---		2.250	8.000	3.250	8.750
	3.500	2 1/2"-12 x 3.500	3 1/2"-12 x 3.500	3 1/4"-12 x 3.500	3 1/4"-12 x 6.500	4.249	---	1.000						---		3.000									.625	---							---	---		2.250	8.000	3.250	8.750
6.000	1.375	1"-14 x 1.625	1 3/8"-12 x 1.625	1 1/4"-12 x 1.625	1 1/4"-12 x 2.500	1.999	3.267	.625	1.515	1.000	3.219	3.594	.140	.312	.750	1.125	6.500	3/4	-12	.625	2.000	1.500	.656	.938	---	.625	1.500	5.000	1.000	6.375	3.250	4.992	3.734	3.000	.625	1.625	8.125	2.750	9.125
	1.750	1 1/4"-12 x 2.000	1 3/4"-12 x 2.000	1 1/2"-12 x 2.000	1 1/2"-12 x 3.000	2.374	3.267	.750						.312		1.500				.625					---	.625							3.734	3.000		1.875	8.375	3.000	9.375
	2.000	1 1/2"-12 x 2.250	2"-12 x 2.250	1 3/4"-12 x 2.250	1 3/4"-12 x 3.500	2.624	3.812	.875						.312		1.688				.625					---	.625							4.312	3.750		2.000	8.500	3.125	9.500
	2.500	1 7/8"-12 x 3.000	2 1/2"-12 x 3.000	2 1/4"-12 x 3.000	2 1/4"-12 x 4.500	3.124	3.812	1.000						.312		2.062				.625					---	.625							4.312	3.750		2.250	8.750	3.375	9.750
	3.000	2 1/4"-12 x 3.500	3"-12 x 3.500	2 3/4"-12 x 3.500	2 3/4"-12 x 5.500	3.749	4.700	1.000						.375		2.625				.625					---	.625							5.562	4.500		2.250	8.750	3.375	9.750
	3.500	2 1/2"-12 x 3.500	3 1/2"-12 x 3.500	3 1/4"-12 x 3.500	3 1/4"-12 x 6.500	4.249	5.200	1.000						.375		3.000				.625					---	.625							6.062	5.000		2.250	8.750	3.375	9.750
	4.000	3"-12 x 4.000	4"-12 x 4.000	3 3/4"-12 x 4.000	3 3/4"-12 x 7.500	4.749	---	1.000						---		3.375				.750					.625	---							---	---		2.250	8.750	3.375	9.750

NEVA DESIGN

4.03

FILE: 4.03_LH03S2.dwg REV: 02/09/2010

27650 Groesbeck Hwy • Roseville, MI 48066-2759 • Phone 586.775.7211 • Fax 586.775.4545 • Toll Free 800.526.7968 • e-mail: sales@peninsularcylinders.com • www.peninsularcylinders.com

HEAD RECTANGULAR FLANGE

Peninsular Mounting Style: **LH 4**

Low Pressure Steel Hydraulic Cylinder

BORE	WORKING P.S.I.	RATED P.S.I.
1.50	1500	2500
2.00	1500	2500
2.50	1000	1500
3.25	1000	1500
4.00	1000	1500
5.00	800	1200
6.00	800	1200

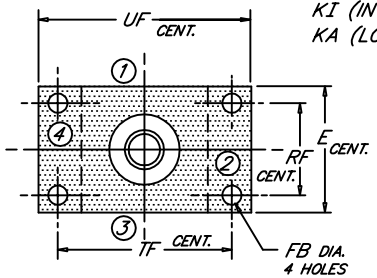

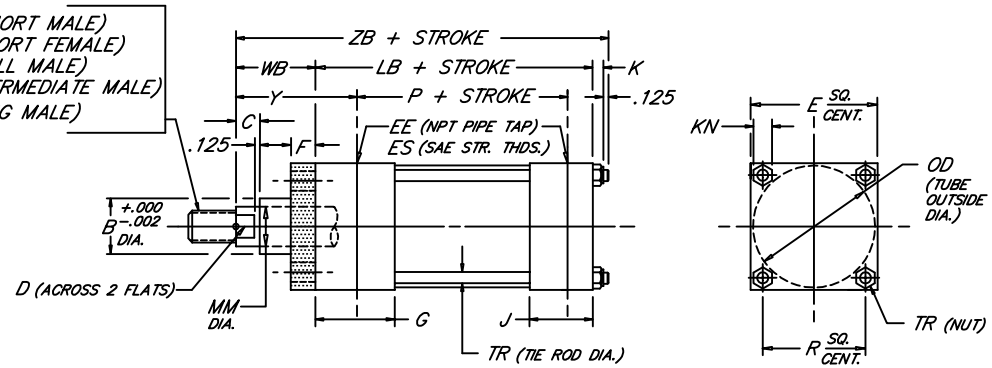

BORE	ROD MM	ROD THREAD X LENGTH KM & KF	KD	KI	KA	B	C	D	E	NPT/SAE EE	ES	F	FB	G	J	K	KN	LB	OD	P	R	RF	TF	TR	UF	WB	Y	ZB
1.500	.625	7/16"-20 x .750	5/8"-18 x .750	1/2"-20 x .750	1/2"-20 x 1.125	1.124	.375	.500	2.000	3/8	-6	.375	.312	1.500	1.000	.344	.500	3.625	1.750	2.335	1.478	1.428	2.750	.312	3.375	1.000	1.875	5.094
	1.000	3/4"-16 x 1.125	1"-14 x 1.125	7/8"-14 x 1.125	7/8"-14 x 1.875	1.499	.500	.875																		1.375	2.250	5.469
2.000	.625	7/16"-20 x .750	5/8"-18 x .750	1/2"-20 x .750	1/2"-20 x 1.125	1.124	.375	.500	2.500	3/8	-6	.375	.375	1.500	1.000	.406	.562	3.625	2.375	2.335	1.966	1.838	3.375	.375	4.125	1.000	1.875	5.156
	1.000	3/4"-16 x 1.125	1"-14 x 1.125	7/8"-14 x 1.125	7/8"-14 x 1.875	1.499	.500	.875																		1.375	2.250	5.531
	1.375	1"-14 x 1.625	1 3/8"-12 x 1.625	1 1/4"-12 x 1.625	1 1/4"-12 x 2.500	1.999	.625	1.125																		1.625	2.500	5.781
2.500	.625	7/16"-20 x .750	5/8"-18 x .750	1/2"-20 x .750	1/2"-20 x 1.125	1.124	.375	.500	3.000	3/8	-6	.375	.375	1.500	1.000	.406	.562	3.750	2.875	2.460	2.320	2.192	3.875	.375	4.625	1.000	1.875	5.281
	1.000	3/4"-16 x 1.125	1"-14 x 1.125	7/8"-14 x 1.125	7/8"-14 x 1.875	1.499	.500	.875																		1.375	2.250	5.656
	1.375	1"-14 x 1.625	1 3/8"-12 x 1.625	1 1/4"-12 x 1.625	1 1/4"-12 x 2.500	1.999	.625	1.125																		1.625	2.500	5.906
	1.750	1 1/4"-12 x 2.000	1 3/4"-12 x 2.000	1 1/2"-12 x 2.000	1 1/2"-12 x 3.000	2.374	.750	1.500																		1.875	2.750	6.156
3.250	1.000	3/4"-16 x 1.125	1"-14 x 1.125	7/8"-14 x 1.125	7/8"-14 x 1.875	1.499	.500	.875	3.750	1/2	-8	.625	.438	1.750	1.250	.531	.750	4.250	3.625	2.750	2.942	2.758	4.688	.500	5.500	1.375	2.375	6.281
	1.375	1"-14 x 1.625	1 3/8"-12 x 1.625	1 1/4"-12 x 1.625	1 1/4"-12 x 2.500	1.999	.625	1.125																		1.625	2.625	6.531
	1.750	1 1/4"-12 x 2.000	1 3/4"-12 x 2.000	1 1/2"-12 x 2.000	1 1/2"-12 x 3.000	2.374	.750	1.500																		1.875	2.875	6.781
	2.000	1 1/2"-12 x 2.250	2"-12 x 2.250	1 3/4"-12 x 2.250	1 3/4"-12 x 3.500	2.624	.875	1.688																		2.000	3.000	6.906
4.000	1.000	3/4"-16 x 1.125	1"-14 x 1.125	7/8"-14 x 1.125	7/8"-14 x 1.875	1.499	.500	.875	4.500	1/2	-8	.625	.438	1.750	1.250	.531	.750	4.250	4.375	2.750	3.469	3.323	5.438	.500	6.250	1.375	2.375	6.281
	1.375	1"-14 x 1.625	1 3/8"-12 x 1.625	1 1/4"-12 x 1.625	1 1/4"-12 x 2.500	1.999	.625	1.125																		1.625	2.625	6.531
	1.750	1 1/4"-12 x 2.000	1 3/4"-12 x 2.000	1 1/2"-12 x 2.000	1 1/2"-12 x 3.000	2.374	.750	1.500																		1.875	2.875	6.781
	2.000	1 1/2"-12 x 2.250	2"-12 x 2.250	1 3/4"-12 x 2.250	1 3/4"-12 x 3.500	2.624	.875	1.688																		2.000	3.000	6.906
	2.500	1 7/8"-12 x 3.000	2 1/2"-12 x 3.000	2 1/4"-12 x 3.000	2 1/4"-12 x 4.500	3.124	1.000	2.062																		2.250	3.250	7.156
5.000	1.000	3/4"-16 x 1.125	1"-14 x 1.125	7/8"-14 x 1.125	7/8"-14 x 1.875	1.499	.500	.875	5.500	1/2	-8	.625	.562	1.750	1.250	.656	.938	4.500	5.375	3.000	4.285	4.101	6.625	.625	7.625	1.375	2.375	6.656
	1.375	1"-14 x 1.625	1 3/8"-12 x 1.625	1 1/4"-12 x 1.625	1 1/4"-12 x 2.500	1.999	.625	1.125																		1.625	2.625	6.906
	1.750	1 1/4"-12 x 2.000	1 3/4"-12 x 2.000	1 1/2"-12 x 2.000	1 1/2"-12 x 3.000	2.374	.750	1.500																		1.875	2.875	7.156
	2.000	1 1/2"-12 x 2.250	2"-12 x 2.250	1 3/4"-12 x 2.250	1 3/4"-12 x 3.500	2.624	.875	1.688																		2.000	3.000	7.281
	2.500	1 7/8"-12 x 3.000	2 1/2"-12 x 3.000	2 1/4"-12 x 3.000	2 1/4"-12 x 4.500	3.124	1.000	2.062																		2.250	3.250	7.531
	3.000	2 1/4"-12 x 3.500	3"-12 x 3.500	2 3/4"-12 x 3.500	2 3/4"-12 x 5.500	3.749	1.000	2.625																		2.250	3.250	7.531
	3.500	2 1/2"-12 x 3.500	3 1/2"-12 x 3.500	3 1/4"-12 x 3.500	3 1/4"-12 x 6.500	4.249	1.000	3.000																		2.250	3.250	7.531
6.000	1.375	1"-14 x 1.625	1 3/8"-12 x 1.625	1 1/4"-12 x 1.625	1 1/4"-12 x 2.500	1.999	.625	1.125	6.500	3/4	-12	.750	.562	2.000	1.500	.656	.938	5.000	6.375	3.250	4.992	4.879	7.625	.625	8.625	1.625	2.750	7.406
	1.750	1 1/4"-12 x 2.000	1 3/4"-12 x 2.000	1 1/2"-12 x 2.000	1 1/2"-12 x 3.000	2.374	.750	1.500																		1.875	3.000	7.656
	2.000	1 1/2"-12 x 2.250	2"-12 x 2.250	1 3/4"-12 x 2.250	1 3/4"-12 x 3.500	2.624	.875	1.688																		2.000	3.125	7.781
	2.500	1 7/8"-12 x 3.000	2 1/2"-12 x 3.000	2 1/4"-12 x 3.000	2 1/4"-12 x 4.500	3.124	1.000	2.062																		2.250	3.375	8.031
	3.000	2 1/4"-12 x 3.500	3"-12 x 3.500	2 3/4"-12 x 3.500	2 3/4"-12 x 5.500	3.749	1.000	2.625																		2.250	3.375	8.031
	3.500	2 1/2"-12 x 3.500	3 1/2"-12 x 3.500	3 1/4"-12 x 3.500	3 1/4"-12 x 6.500	4.249	1.000	3.000																		2.250	3.375	8.031
	4.000	3"-12 x 4.000	4"-12 x 4.000	3 3/4"-12 x 4.000	3 3/4"-12 x 7.500	4.749	1.000	3.375																		2.250	3.375	8.031
BORE	MM	KM & KF	KD	KI	KA	B	C	D	E	EE	ES	F	FB	G	J	K	KN	LB	OD	P	R	RF	TF	TR	UF	WB	Y	ZB

NEVA DESIGN

4.04

FILE: 4.04_LH04S2.dwg REV: 02/09/2010

27650 Groesbeck Hwy • Roseville, MI 48066-2759 • Phone 586.775.7211 • Fax 586.775.4545 • Toll Free 800.526.7968 • e-mail: sales@peninsularcylinders.com • www.peninsularcylinders.com

CAP RECTANGULAR FLANGE

Peninsular Mounting Style: **LH 5**

Low Pressure Steel Hydraulic Cylinder

BORE	WORKING P.S.I.	RATED P.S.I.
1.50	1500	2500
2.00	1500	2500
2.50	1000	1500
3.25	1000	1500
4.00	1000	1500
5.00	800	1200
6.00	800	1200

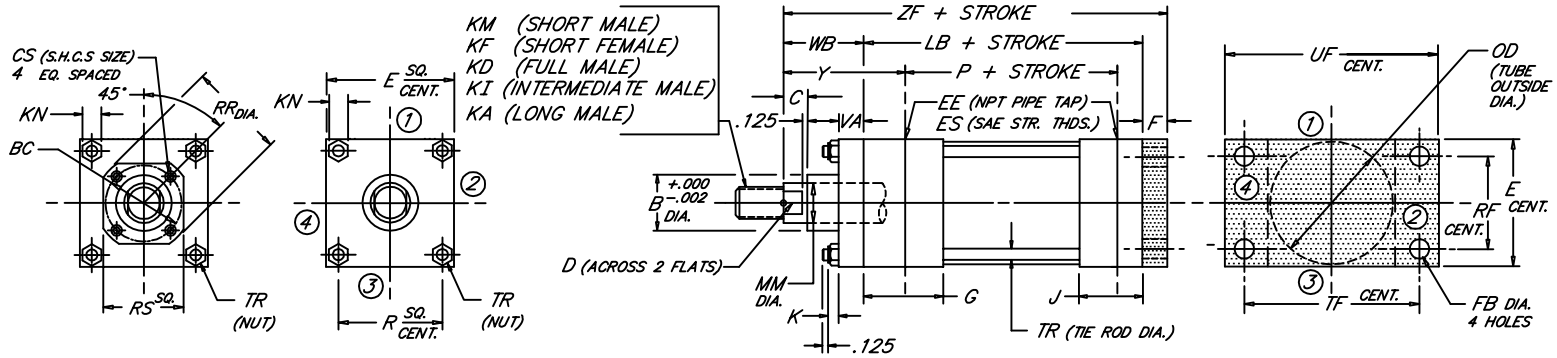

BORE	ROD MM	ROD THREAD X LENGTH KM & KF	KD	KI	KA	B	BC	C	CS	D	E	EE (NPT)	ES (SAE)	F	FB	G	J	K	KN	LB	OD	P	R	RF	RR	RS	TF	TR	UF	VA	WB	Y	ZF
1.500	.625	7/16"-20 x .750	5/8"-18 x .750	1/2"-20 x .750	1/2"-20 x 1.125	1.124	---	.375	---	.500	2.000	3/8	-6	.375	.312	1.500	1.000	.344	.500	3.625	1.750	2.335	1.478	1.428	---	---	2.750	.312	3.375	.375	1.000	1.875	5.000
	1.000	3/4"-16 x 1.125	1"-14 x 1.125	7/8"-14 x 1.125	7/8"-14 x 1.875	1.499		.500		.875																					1.375	2.250	5.375
2.000	.625	7/16"-20 x .750	5/8"-18 x .750	1/2"-20 x .750	1/2"-20 x 1.125	1.124	---	.375	---	.500	2.500	3/8	-6	.375	.375	1.500	1.000	.406	.562	3.625	2.375	2.335	1.966	1.838	---	---	3.375	.375	4.125	.375	1.000	1.875	5.000
	1.000	3/4"-16 x 1.125	1"-14 x 1.125	7/8"-14 x 1.125	7/8"-14 x 1.875	1.499		.500		.875																					1.375	2.250	5.375
	1.375	1"-14 x 1.625	1 3/8"-12 x 1.625	1 1/4"-12 x 1.625	1 1/4"-12 x 2.500	1.999		.625		1.125																					1.625	2.500	5.625
2.500	.625	7/16"-20 x .750	5/8"-18 x .750	1/2"-20 x .750	1/2"-20 x 1.125	1.124	---	.375	---	.500	3.000	3/8	-6	.375	.375	1.500	1.000	.406	.562	3.750	2.875	2.460	2.320	2.192	---	---	3.875	.375	4.625	.375	1.000	1.875	5.125
	1.000	3/4"-16 x 1.125	1"-14 x 1.125	7/8"-14 x 1.125	7/8"-14 x 1.875	1.499		.500		.875																					1.375	2.250	5.500
	1.375	1"-14 x 1.625	1 3/8"-12 x 1.625	1 1/4"-12 x 1.625	1 1/4"-12 x 2.500	1.999		.625		1.125																					1.625	2.500	5.750
	1.750	1 1/4"-12 x 2.000	1 3/4"-12 x 2.000	1 1/2"-12 x 2.000	1 1/2"-12 x 3.000	2.374		.750		1.500																					1.875	2.750	6.000
3.250	1.000	3/4"-16 x 1.125	1"-14 x 1.125	7/8"-14 x 1.125	7/8"-14 x 1.875	1.499	---	.500	---	.875	3.750	1/2	-8	.625	.438	1.750	1.250	.531	.750	4.250	3.625	2.750	2.942	2.758	---	---	4.688	.500	5.500	.625	1.375	2.375	6.250
	1.375	1"-14 x 1.625	1 3/8"-12 x 1.625	1 1/4"-12 x 1.625	1 1/4"-12 x 2.500	1.999		.625		1.125																					1.625	2.625	6.500
	1.750	1 1/4"-12 x 2.000	1 3/4"-12 x 2.000	1 1/2"-12 x 2.000	1 1/2"-12 x 3.000	2.374		.750		1.500																					1.875	2.875	6.750
	2.000	1 1/2"-12 x 2.250	2"-12 x 2.250	1 3/4"-12 x 2.250	1 3/4"-12 x 3.500	2.624		.875		1.688																					2.000	3.000	6.875
4.000	1.000	3/4"-16 x 1.125	1"-14 x 1.125	7/8"-14 x 1.125	7/8"-14 x 1.875	1.499	2.562	.500	.250	.875	4.500	1/2	-8	.625	.438	1.750	1.250	.531	.750	4.250	4.375	2.750	3.469	3.323	2.969	2.500	5.438	.500	6.250	.625	1.375	2.375	6.250
	1.375	1"-14 x 1.625	1 3/8"-12 x 1.625	1 1/4"-12 x 1.625	1 1/4"-12 x 2.500	1.999	2.562	.625	.250	1.125															2.969	2.500					1.625	2.625	6.500
	1.750	1 1/4"-12 x 2.000	1 3/4"-12 x 2.000	1 1/2"-12 x 2.000	1 1/2"-12 x 3.000	2.374	3.267	.750	.312	1.500															3.734	3.000					1.875	2.875	6.750
	2.000	1 1/2"-12 x 2.250	2"-12 x 2.250	1 3/4"-12 x 2.250	1 3/4"-12 x 3.500	2.624	---	.875	---	1.688															---	---					2.000	3.000	6.875
	2.500	1 7/8"-12 x 3.000	2 1/2"-12 x 3.000	2 1/4"-12 x 3.000	2 1/4"-12 x 4.500	3.124	---	1.000	---	2.062															---	---					2.250	3.250	7.125
5.000	1.000	3/4"-16 x 1.125	1"-14 x 1.125	7/8"-14 x 1.125	7/8"-14 x 1.875	1.499	2.562	.500	.250	.875	5.500	1/2	-8	.625	.562	1.750	1.250	.656	.938	4.500	5.375	3.000	4.285	4.101	2.969	2.500	6.625	.625	7.625	.625	1.375	2.375	6.500
	1.375	1"-14 x 1.625	1 3/8"-12 x 1.625	1 1/4"-12 x 1.625	1 1/4"-12 x 2.500	1.999	2.562	.625	.250	1.125															2.969	2.500					1.625	2.625	6.750
	1.750	1 1/4"-12 x 2.000	1 3/4"-12 x 2.000	1 1/2"-12 x 2.000	1 1/2"-12 x 3.000	2.374	3.267	.750	.312	1.500															3.734	3.000					1.875	2.875	7.000
	2.000	1 1/2"-12 x 2.250	2"-12 x 2.250	1 3/4"-12 x 2.250	1 3/4"-12 x 3.500	2.624	3.812	.875	.312	1.688															4.312	3.750					2.000	3.000	7.125
	2.500	1 7/8"-12 x 3.000	2 1/2"-12 x 3.000	2 1/4"-12 x 3.000	2 1/4"-12 x 4.500	3.124	3.812	1.000	.312	2.062															4.312	3.750					2.250	3.250	7.375
	3.000	2 1/4"-12 x 3.500	3"-12 x 3.500	2 3/4"-12 x 3.500	2 3/4"-12 x 5.500	3.749	---	1.000	---	2.625															---	---					2.250	3.250	7.375
	3.500	2 1/2"-12 x 3.500	3 1/2"-12 x 3.500	3 1/4"-12 x 3.500	3 1/4"-12 x 6.500	4.249	---	1.000	---	3.000															---	---					2.250	3.250	7.375
6.000	1.375	1"-14 x 1.625	1 3/8"-12 x 1.625	1 1/4"-12 x 1.625	1 1/4"-12 x 2.500	1.999	3.267	.625	.312	1.125	6.500	3/4	-12	.750	.562	2.000	1.500	.656	.938	5.000	6.375	3.250	4.992	4.879	3.734	3.000	7.625	.625	8.625	.625	1.625	2.750	7.375
	1.750	1 1/4"-12 x 2.000	1 3/4"-12 x 2.000	1 1/2"-12 x 2.000	1 1/2"-12 x 3.000	2.374	3.267	.750	.312	1.500															3.734	3.000				.625	1.875	3.000	7.625
	2.000	1 1/2"-12 x 2.250	2"-12 x 2.250	1 3/4"-12 x 2.250	1 3/4"-12 x 3.500	2.624	3.812	.875	.312	1.688															4.312	3.750				.625	2.000	3.125	7.750
	2.500	1 7/8"-12 x 3.000	2 1/2"-12 x 3.000	2 1/4"-12 x 3.000	2 1/4"-12 x 4.500	3.124	3.812	1.000	.312	2.062															4.312	3.750				.625	2.250	3.375	8.000
	3.000	2 1/4"-12 x 3.500	3"-12 x 3.500	2 3/4"-12 x 3.500	2 3/4"-12 x 5.500	3.749	4.700	1.000	.375	2.625															5.562	4.500				.625	2.250	3.375	8.000
	3.500	2 1/2"-12 x 3.500	3 1/2"-12 x 3.500	3 1/4"-12 x 3.500	3 1/4"-12 x 6.500	4.249	5.200	1.000	.375	3.000															6.062	5.000				.625	2.250	3.375	8.000
	4.000	3"-12 x 4.000	4"-12 x 4.000	3 3/4"-12 x 4.000	3 3/4"-12 x 7.500	4.749	---	1.000	---	3.375															---	---				.750	2.250	3.375	8.000
BORE	MM	KM & KF	KD	KI	KA	B	BC	C	CS	D	E	EE	ES	F	FB	G	J	K	KN	LB	OD	P	R	RF	RR	RS	TF	TR	UF	VA	WB	Y	ZF

NEVA DESIGN

4.05

FILE: 4.05_LH05S2.dwg REV: 02/09/2010

27650 Groesbeck Hwy • Roseville, MI 48066-2759 • Phone 586.775.7211 • Fax 586.775.4545 • Toll Free 800.526.7968 • e-mail: sales@peninsularcylinders.com • www.peninsularcylinders.com

INTERMEDIATE TRUNNION

Low Pressure Steel Hydraulic Cylinder

Peninsular Mounting Style: **LH 6**

BORE	WORKING P.S.I.	RATED P.S.I.
1.50	1500	2500
2.00	1500	2500
2.50	1000	1500
3.25	1000	1500
4.00	1000	1500
5.00	800	1200
6.00	800	1200

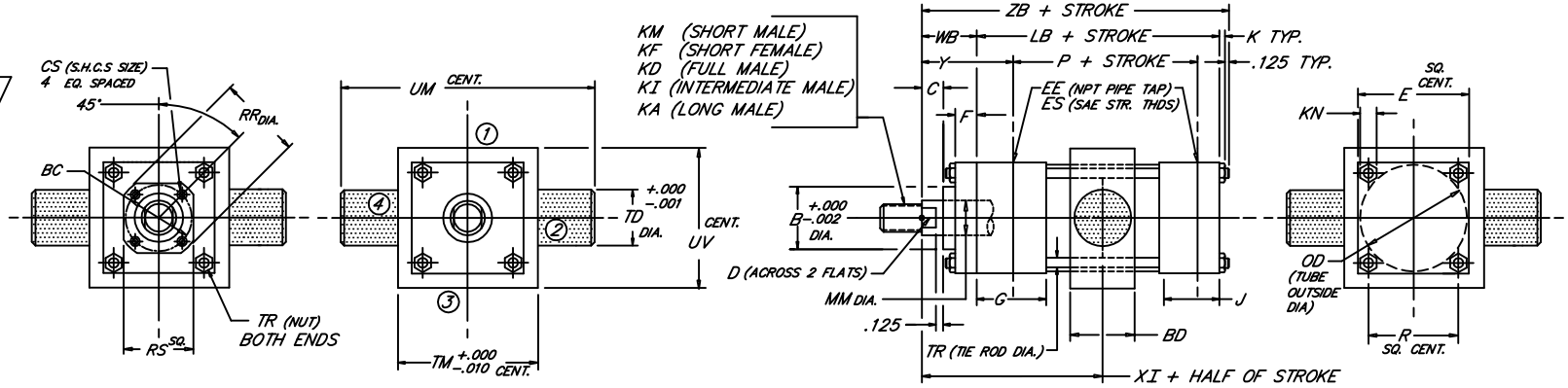

BORE	ROD MM	ROD THREAD X LENGTH KM & KF	KD	KI	KA	B	BC	BD	C	CS	D	E	NPT/SAE EE	ES	F	G	J	K	KN	LB	OD	P	R	RR	RS	TD	TM	TR	UM	UV	WB	XI	Y	ZB	MINIMUM STROKE
1.500	.625	7/16"-20 x .750	5/8"-18 x .750	1/2"-20 x .750	1/2"-20 x 1.125	1.124	---	1.25	.375	---	.500	2.000	3/8	-6	.375	1.500	1.000	.344	.500	3.625	1.750	2.335	1.478	---	---	1.000	2.500	.312	4.500	2.500	1.000	3.063	1.875	5.094	.125
	1.000	3/4"-16 x 1.125	1"-14 x 1.125	7/8"-14 x 1.125	7/8"-14 x 1.875	1.499			.500		.875																				1.375	3.438	2.250	5.469	
2.000	.625	7/16"-20 x .750	5/8"-18 x .750	1/2"-20 x .750	1/2"-20 x 1.125	1.124	---	1.50	.375	---	.500	2.500	3/8	-6	.375	1.500	1.000	.406	.562	3.625	2.375	2.335	1.966	---	---	1.000	3.000	.375	5.000	3.000	1.000	3.063	1.875	5.156	.375
	1.000	3/4"-16 x 1.125	1"-14 x 1.125	7/8"-14 x 1.125	7/8"-14 x 1.875	1.499			.500		.875																				1.375	3.438	2.250	5.531	
	1.375	1"-14 x 1.625	1 3/8"-12 x 1.625	1 1/4"-12 x 1.625	1 1/4"-12 x 2.500	1.999			.625		1.125																				1.625	3.688	2.500	5.781	
2.500	.625	7/16"-20 x .750	5/8"-18 x .750	1/2"-20 x .750	1/2"-20 x 1.125	1.124	---	1.50	.375	---	.500	3.000	3/8	-6	.375	1.500	1.000	.406	.562	3.750	2.875	2.460	2.320	---	---	1.000	3.500	.375	5.500	3.500	1.000	3.125	1.875	5.281	.250
	1.000	3/4"-16 x 1.125	1"-14 x 1.125	7/8"-14 x 1.125	7/8"-14 x 1.875	1.499			.500		.875																				1.375	3.500	2.250	5.656	
	1.375	1"-14 x 1.625	1 3/8"-12 x 1.625	1 1/4"-12 x 1.625	1 1/4"-12 x 2.500	1.999			.625		1.125																				1.625	3.750	2.500	5.906	
	1.750	1 1/4"-12 x 2.000	1 3/4"-12 x 2.000	1 1/2"-12 x 2.000	1 1/2"-12 x 3.000	2.374			.750		1.500																				1.875	4.000	2.750	6.156	
3.250	1.000	3/4"-16 x 1.125	1"-14 x 1.125	7/8"-14 x 1.125	7/8"-14 x 1.875	1.499	---	2.00	.500	---	.875	3.750	1/2	-8	.625	1.750	1.250	.531	.750	4.250	3.625	2.750	2.942	---	---	1.000	4.500	.500	6.500	4.250	1.375	3.750	2.375	6.281	.750
	1.375	1"-14 x 1.625	1 3/8"-12 x 1.625	1 1/4"-12 x 1.625	1 1/4"-12 x 2.500	1.999			.625		1.125																				1.625	4.000	2.625	6.531	
	1.750	1 1/4"-12 x 2.000	1 3/4"-12 x 2.000	1 1/2"-12 x 2.000	1 1/2"-12 x 3.000	2.374			.750		1.500																				1.875	4.250	2.875	6.781	
	2.000	1 1/2"-12 x 2.250	2"-12 x 2.250	1 3/4"-12 x 2.250	1 3/4"-12 x 3.500	2.624			.875		1.688																				2.000	4.375	3.000	6.906	
4.000	1.000	3/4"-16 x 1.125	1"-14 x 1.125	7/8"-14 x 1.125	7/8"-14 x 1.875	1.499	2.562	2.00	.500	.250	.875	4.500	1/2	-8	.625	1.750	1.250	.531	.750	4.250	4.375	2.750	3.469	2.969	2.500	1.000	5.250	.500	7.250	5.000	1.375	3.750	2.375	6.281	.750
	1.375	1"-14 x 1.625	1 3/8"-12 x 1.625	1 1/4"-12 x 1.625	1 1/4"-12 x 2.500	1.999	2.562		.625	.250	1.125													2.969	2.500						1.625	4.000	2.625	6.531	
	1.750	1 1/4"-12 x 2.000	1 3/4"-12 x 2.000	1 1/2"-12 x 2.000	1 1/2"-12 x 3.000	2.374	3.267		.750	.312	1.500													3.734	3.000						1.875	4.250	2.875	6.781	
	2.000	1 1/2"-12 x 2.250	2"-12 x 2.250	1 3/4"-12 x 2.250	1 3/4"-12 x 3.500	2.624	---		.875	---	1.688													---	---						2.000	4.375	3.000	6.906	
	2.500	1 7/8"-12 x 3.000	2 1/2"-12 x 3.000	2 1/4"-12 x 3.000	2 1/4"-12 x 4.500	3.124	---		1.000	---	2.062													---	---						2.250	4.625	3.250	7.156	
5.000	1.000	3/4"-16 x 1.125	1"-14 x 1.125	7/8"-14 x 1.125	7/8"-14 x 1.875	1.499	2.562	2.00	.500	.250	.875	5.500	1/2	-8	.625	1.750	1.250	.656	.938	4.500	5.375	3.000	4.285	2.969	2.500	1.000	6.250	.625	8.250	6.000	1.375	3.875	2.375	6.656	.500
	1.375	1"-14 x 1.625	1 3/8"-12 x 1.625	1 1/4"-12 x 1.625	1 1/4"-12 x 2.500	1.999	2.562		.625	.250	1.125													2.969	2.500						1.625	4.125	2.625	6.906	
	1.750	1 1/4"-12 x 2.000	1 3/4"-12 x 2.000	1 1/2"-12 x 2.000	1 1/2"-12 x 3.000	2.374	3.267		.750	.312	1.500													3.734	3.000						1.875	4.375	2.875	7.156	
	2.000	1 1/2"-12 x 2.250	2"-12 x 2.250	1 3/4"-12 x 2.250	1 3/4"-12 x 3.500	2.624	3.812		.875	.312	1.688													4.312	3.750						2.000	4.500	3.000	7.281	
	2.500	1 7/8"-12 x 3.000	2 1/2"-12 x 3.000	2 1/4"-12 x 3.000	2 1/4"-12 x 4.500	3.124	3.812		1.000	.312	2.062													4.312	3.750						2.250	4.750	3.250	7.531	
	3.000	2 1/4"-12 x 3.500	3"-12 x 3.500	2 3/4"-12 x 3.500	2 3/4"-12 x 5.500	3.749	---		1.000	---	2.625													---	---						2.250	4.750	3.250	7.531	
	3.500	2 1/2"-12 x 3.500	3 1/2"-12 x 3.500	3 1/4"-12 x 3.500	3 1/4"-12 x 6.500	4.249	---		1.000	---	3.000													---	---						2.250	4.750	3.250	7.531	
6.000	1.375	1"-14 x 1.625	1 3/8"-12 x 1.625	1 1/4"-12 x 1.625	1 1/4"-12 x 2.500	1.999	3.267	2.50	.625	.312	1.125	6.500	3/4	-12	.625	2.000	1.500	.656	.938	5.000	6.375	3.250	4.992	3.734	3.000	1.375	7.625	.625	10.375	7.000	1.625	4.375	2.750	7.406	1.000
	1.750	1 1/4"-12 x 2.000	1 3/4"-12 x 2.000	1 1/2"-12 x 2.000	1 1/2"-12 x 3.000	2.374	3.267		.750	.312	1.500				.625									3.734	3.000						1.875	4.625	3.000	7.656	
	2.000	1 1/2"-12 x 2.250	2"-12 x 2.250	1 3/4"-12 x 2.250	1 3/4"-12 x 3.500	2.624	3.812		.875	.312	1.688				.625									4.312	3.750						2.000	4.750	3.125	7.781	
	2.500	1 7/8"-12 x 3.000	2 1/2"-12 x 3.000	2 1/4"-12 x 3.000	2 1/4"-12 x 4.500	3.124	3.812		1.000	.312	2.062				.625									4.312	3.750						2.250	5.000	3.375	8.031	
	3.000	2 1/4"-12 x 3.500	3"-12 x 3.500	2 3/4"-12 x 3.500	2 3/4"-12 x 5.500	3.749	4.700		1.000	.375	2.625				.625									5.562	4.500						2.250	5.000	3.375	8.031	
	3.500	2 1/2"-12 x 3.500	3 1/2"-12 x 3.500	3 1/4"-12 x 3.500	3 1/4"-12 x 6.500	4.249	5.200		1.000	.375	3.000				.625									6.062	5.000						2.250	5.000	3.375	8.031	
	4.000	3"-12 x 4.000	4"-12 x 4.000	3 3/4"-12 x 4.000	3 3/4"-12 x 7.500	4.749	---		1.000	---	3.375				.750									---	---						2.250	5.000	3.375	8.031	
BORE	MM	KM & KF	KD	KI	KA	B	BC	BD	C	CS	D	E	EE	ES	F	G	J	K	KN	LB	OD	P	R	RR	RS	TD	TM	TR	UM	UV	WB	XI	Y	ZB	MIN STR

NEVA DESIGN

4.06

FILE: 4.06_LH06S2.dwg REV: 02/09/2010

27650 Groesbeck Hwy • Roseville, MI 48066-2759 • Phone 586.775.7211 • Fax 586.775.4545 • Toll Free 800.526.7968 • e-mail: sales@peninsularcylinders.com • www.peninsularcylinders.com

CAP TRUNNION

Low Pressure Steel Hydraulic Cylinder

BORE	1.50	2.00	2.50	3.25	4.00	5.00	6.00
WORKING P.S.I.	1500	1500	1000	1000	1000	800	800
RATED P.S.I.	2500	2500	1500	1500	1500	1200	1200

Peninsular Mounting Style: **LH 7**

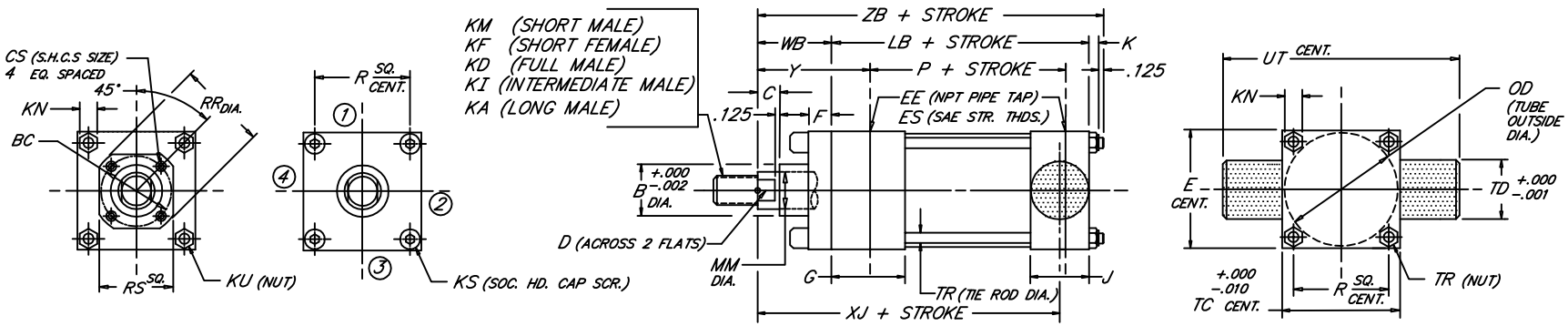

BORE	MM	KM & KF	KD	KI	KA	B	BC	C	CS	D	E	EE	ES	F	G	J	K	KN	KS	KU	LB	OD	P	R	RR	RS	TC	TD	TR	UT	WB	Y	XJ	ZB
	ROD	ROD THREAD X LENGTH										NPT	SAE																					
1.500	.625	7/16"-20 x .750	5/8"-18 x .750	1/2"-20 x .750	1/2"-20 x 1.125	1.124	---	.375	---	.500	2.000	3/8	-6	.375	1.500	1.000	.344	.500	.312	---	3.625	1.750	2.335	1.478	---	---	2.000	1.000	.312	4.000	1.000	1.875	4.125	5.094
	1.000	3/4"-16 x 1.125	1"-14 x 1.125	7/8"-14 x 1.125	7/8"-14 x 1.875	1.499		.500		.875																					1.375	2.250	4.500	5.469
2.000	.625	7/16"-20 x .750	5/8"-18 x .750	1/2"-20 x .750	1/2"-20 x 1.125	1.124		.375		.500	2.500	3/8	-6	.375	1.500	1.000	.406	.562	.375	---	3.625	2.375	2.335	1.966	---	---	2.500	1.000	.375	4.500	1.000	1.875	4.125	5.156
	1.000	3/4"-16 x 1.125	1"-14 x 1.125	7/8"-14 x 1.125	7/8"-14 x 1.875	1.499	---	.500	---	.875																					1.375	2.250	4.500	5.531
	1.375	1"-14 x 1.625	1 3/8"-12 x 1.625	1 1/4"-12 x 1.625	1 1/4"-12 x 2.500	1.999		.625		1.125																					1.625	2.500	4.750	5.781
2.500	.625	7/16"-20 x .750	5/8"-18 x .750	1/2"-20 x .750	1/2"-20 x 1.125	1.124		.375		.500	3.000	3/8	-6	.375	1.500	1.000	.406	.562	.375	---	3.750	2.875	2.460	2.320	---	---	3.000	1.000	.375	5.000	1.000	1.875	4.250	5.281
	1.000	3/4"-16 x 1.125	1"-14 x 1.125	7/8"-14 x 1.125	7/8"-14 x 1.875	1.499	---	.500	---	.875																					1.375	2.250	4.625	5.656
	1.375	1"-14 x 1.625	1 3/8"-12 x 1.625	1 1/4"-12 x 1.625	1 1/4"-12 x 2.500	1.999		.625		1.125																					1.625	2.500	4.875	5.906
	1.750	1 1/4"-12 x 2.000	1 3/4"-12 x 2.000	1 1/2"-12 x 2.000	1 1/2"-12 x 3.000	2.374		.750		1.500																					1.875	2.750	5.125	6.156
3.250	1.000	3/4"-16 x 1.125	1"-14 x 1.125	7/8"-14 x 1.125	7/8"-14 x 1.875	1.499		.500		.875	3.750	1/2	-8	.625	1.750	1.250	.531	.750	.500	---	4.250	3.625	2.750	2.942	---	---	3.750	1.000	.500	5.750	1.375	2.375	5.000	6.281
	1.375	1"-14 x 1.625	1 3/8"-12 x 1.625	1 1/4"-12 x 1.625	1 1/4"-12 x 2.500	1.999	---	.625	---	1.125																					1.625	2.625	5.250	6.531
	1.750	1 1/4"-12 x 2.000	1 3/4"-12 x 2.000	1 1/2"-12 x 2.000	1 1/2"-12 x 3.000	2.374		.750		1.500																					1.875	2.875	5.500	6.781
	2.000	1 1/2"-12 x 2.250	2"-12 x 2.250	1 3/4"-12 x 2.250	1 3/4"-12 x 3.000	2.624		.875		1.688																					2.000	3.000	5.625	6.906
4.000	1.000	3/4"-16 x 1.125	1"-14 x 1.125	7/8"-14 x 1.125	7/8"-14 x 1.875	1.499	2.562	.500	.250	.875	4.500	1/2	-8	.625	1.750	1.250	.531	.750	---	.500	4.250	4.375	2.750	3.469	2.969	2.500	4.500	1.000	.500	6.500	1.375	2.375	5.000	6.281
	1.375	1"-14 x 1.625	1 3/8"-12 x 1.625	1 1/4"-12 x 1.625	1 1/4"-12 x 2.500	1.999	2.562	.625	.250	1.125									---	.500					2.969	2.500					1.625	2.625	5.250	6.531
	1.750	1 1/4"-12 x 2.000	1 3/4"-12 x 2.000	1 1/2"-12 x 2.000	1 1/2"-12 x 3.000	2.374	3.267	.750	.312	1.500									---	.500					3.734	3.000					1.875	2.875	5.500	6.781
	2.000	1 1/2"-12 x 2.250	2"-12 x 2.250	1 3/4"-12 x 2.250	1 3/4"-12 x 3.500	2.624	---	.875	---	1.688									.500	---					---	---					2.000	3.000	5.625	6.906
	2.500	1 7/8"-12 x 3.000	2 1/2"-12 x 3.000	2 1/4"-12 x 3.000	2 1/4"-12 x 4.500	3.124	---	1.000	---	2.062									.500	---					---	---					2.250	3.250	5.875	7.156
5.000	1.000	3/4"-16 x 1.125	1"-14 x 1.125	7/8"-14 x 1.125	7/8"-14 x 1.875	1.499	2.562	.500	.250	.875	5.500	1/2	-8	.625	1.750	1.250	.656	.938	---	.625	4.500	5.375	3.000	4.285	2.969	2.500	5.500	1.000	.625	7.500	1.375	2.375	5.250	6.656
	1.375	1"-14 x 1.625	1 3/8"-12 x 1.625	1 1/4"-12 x 1.625	1 1/4"-12 x 2.500	1.999	2.562	.625	.250	1.125									---	.625					2.969	2.500					1.625	2.625	5.500	6.906
	1.750	1 1/4"-12 x 2.000	1 3/4"-12 x 2.000	1 1/2"-12 x 2.000	1 1/2"-12 x 3.000	2.374	3.267	.750	.312	1.500									---	.625					3.734	3.000					1.875	2.875	5.750	7.156
	2.000	1 1/2"-12 x 2.250	2"-12 x 2.250	1 3/4"-12 x 2.250	1 3/4"-12 x 3.500	2.624	3.812	.875	.312	1.688									---	.625					4.312	3.750					2.000	3.000	5.875	7.281
	2.500	1 7/8"-12 x 3.000	2 1/2"-12 x 3.000	2 1/4"-12 x 3.000	2 1/4"-12 x 4.500	3.124	3.812	1.000	.312	2.062									---	.625					4.312	3.750					2.250	3.250	6.125	7.531
	3.000	2 1/4"-12 x 3.500	3"-12 x 3.500	2 3/4"-12 x 3.500	2 3/4"-12 x 5.500	3.749	---	1.000	---	2.625									.625	---					---	---					2.250	3.250	6.125	7.531
	3.500	2 1/2"-12 x 3.500	3 1/2"-12 x 3.500	3 1/4"-12 x 3.500	3 1/4"-12 x 6.500	4.249	---	1.000	---	3.000									.625	---					---	---					2.250	3.250	6.125	7.531
6.000	1.375	1"-14 x 1.625	1 3/8"-12 x 1.625	1 1/4"-12 x 1.625	1 1/4"-12 x 2.500	1.999	3.267	.625	.312	1.125	6.500	3/4	-12	.625	2.000	1.500	.656	.938	---	.625	5.000	6.375	3.250	4.992	3.734	3.000	6.500	1.375	.625	9.250	1.625	2.750	5.875	7.406
	1.750	1 1/4"-12 x 2.000	1 3/4"-12 x 2.000	1 1/2"-12 x 2.000	1 1/2"-12 x 3.000	2.374	3.267	.750	.312	1.500				.625					---	.625					3.734	3.000					1.875	3.000	6.125	7.656
	2.000	1 1/2"-12 x 2.250	2"-12 x 2.250	1 3/4"-12 x 2.250	1 3/4"-12 x 3.500	2.624	3.812	.875	.312	1.688				.625					---	.625					4.312	3.750					2.000	3.125	6.250	7.781
	2.500	1 7/8"-12 x 3.000	2 1/2"-12 x 3.000	2 1/4"-12 x 3.000	2 1/4"-12 x 4.500	3.124	3.812	1.000	.312	2.062				.625					---	.625					4.312	3.750					2.250	3.375	6.500	8.031
	3.000	2 1/4"-12 x 3.500	3"-12 x 3.500	2 3/4"-12 x 3.500	2 3/4"-12 x 5.500	3.749	4.700	1.000	.375	2.625				.625					---	.625					5.562	4.500					2.250	3.375	6.500	8.031
	3.500	2 1/2"-12 x 3.500	3 1/2"-12 x 3.500	3 1/4"-12 x 3.500	3 1/4"-12 x 6.500	4.249	5.200	1.000	.375	3.000				.625					---	.625					6.062	5.000					2.250	3.375	6.500	8.031
	4.000	3"-12 x 4.000	4"-12 x 4.000	3 3/4"-12 x 4.000	3 3/4"-12 x 7.500	4.749	---	1.000	---	3.375				.750					.625	---					---	---					2.250	3.375	6.500	8.031
BORE	MM	KM & KF	KD	KI	KA	B	BC	C	CS	D	E	EE	ES	F	G	J	K	KN	KS	KU	LB	OD	P	R	RR	RS	TC	TD	TR	UT	WB	Y	XJ	ZB

NEVA DESIGN

4.07

FILE: 4.07_LH07S2.dwg REV: 02/09/2010

27650 Groesbeck Hwy • Roseville, MI 48066-2759 • Phone 586.775.7211 • Fax 586.775.4545 • Toll Free 800.526.7968 • e-mail: sales@peninsularcylinders.com • www.peninsularcylinders.com

HEAD TIE ROD EXTENDED

Peninsular Mounting Style: **LH 8**

Low Pressure Steel Hydraulic Cylinder

BORE	WORKING P.S.I.	RATED P.S.I.
1.50	1500	2500
2.00	1500	2500
2.50	1000	1500
3.25	1000	1500
4.00	1000	1500
5.00	800	1200
6.00	800	1200

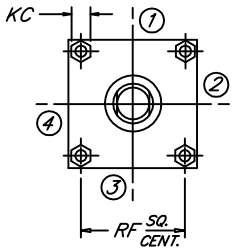

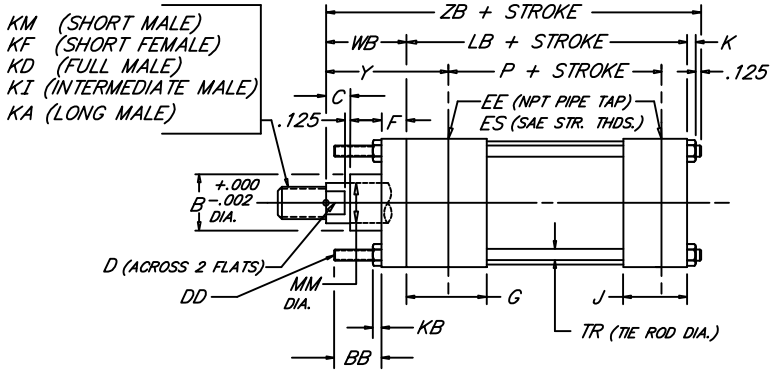

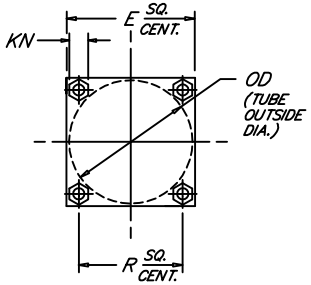

BORE	ROD MM	ROD THREAD X LENGTH KM & KF	KD	KI	KA	B	BB	C	D	DD	E	NPT/SAE EE	ES	F	G	J	K	KB	KC	KN	LB	OD	P	R	RF	TR	WB	Y	ZB
1.500	.625	7/16"-20 x .750	5/8"-18 x .750	1/2"-20 x .750	1/2"-20 x 1.125	1.124	1.000	.375	.500	1/4"-28	2.000	3/8	-6	.375	1.500	1.000	.344	.218	.438	.500	3.625	1.750	2.335	1.478	1.428	.312	1.000	1.875	5.094
	1.000	3/4"-16 x 1.125	1"-14 x 1.125	7/8"-14 x 1.125	7/8"-14 x 1.875	1.499		.500	.875																		1.375	2.250	5.469
2.000	.625	7/16"-20 x .750	5/8"-18 x .750	1/2"-20 x .750	1/2"-20 x 1.125	1.124	1.125	.375	.500	5/16"-24	2.500	3/8	-6	.375	1.500	1.000	.406	.250	.500	.562	3.625	2.375	2.335	1.966	1.838	.375	1.000	1.875	5.156
	1.000	3/4"-16 x 1.125	1"-14 x 1.125	7/8"-14 x 1.125	7/8"-14 x 1.875	1.499		.500	.875																		1.375	2.250	5.531
	1.375	1"-14 x 1.625	1 3/8"-12 x 1.625	1 1/4"-12 x 1.625	1 1/4"-12 x 2.500	1.999		.625	1.125																		1.625	2.500	5.781
2.500	.625	7/16"-20 x .750	5/8"-18 x .750	1/2"-20 x .750	1/2"-20 x 1.125	1.124	1.125	.375	.500	5/16"-24	3.000	3/8	-6	.375	1.500	1.000	.406	.250	.500	.562	3.750	2.875	2.460	2.320	2.192	.375	1.000	1.875	5.281
	1.000	3/4"-16 x 1.125	1"-14 x 1.125	7/8"-14 x 1.125	7/8"-14 x 1.875	1.499		.500	.875																		1.375	2.250	5.656
	1.375	1"-14 x 1.625	1 3/8"-12 x 1.625	1 1/4"-12 x 1.625	1 1/4"-12 x 2.500	1.999		.625	1.125																		1.625	2.500	5.906
	1.750	1 1/4"-12 x 2.000	1 3/4"-12 x 2.000	1 1/2"-12 x 2.000	1 1/2"-12 x 3.000	2.374		.750	1.500																		1.875	2.750	6.156
3.250	1.000	3/4"-16 x 1.125	1"-14 x 1.125	7/8"-14 x 1.125	7/8"-14 x 1.875	1.499	1.375	.500	.875	3/8"-24	3.750	1/2	-8	.625	1.750	1.250	.531	.328	.562	.750	4.250	3.625	2.750	2.942	2.758	.500	1.375	2.375	6.281
	1.375	1"-14 x 1.625	1 3/8"-12 x 1.625	1 1/4"-12 x 1.625	1 1/4"-12 x 2.500	1.999		.625	1.125																		1.625	2.625	6.531
	1.750	1 1/4"-12 x 2.000	1 3/4"-12 x 2.000	1 1/2"-12 x 2.000	1 1/2"-12 x 3.000	2.374		.750	1.500																		1.875	2.875	6.781
	2.000	1 1/2"-12 x 2.250	2"-12 x 2.250	1 3/4"-12 x 2.250	1 3/4"-12 x 3.500	2.624		.875	1.688																		2.000	3.000	6.906
4.000	1.000	3/4"-16 x 1.125	1"-14 x 1.125	7/8"-14 x 1.125	7/8"-14 x 1.875	1.499	1.375	.500	.875	3/8"-24	4.500	1/2	-8	.625	1.750	1.250	.531	.328	.562	.750	4.250	4.375	2.750	3.469	3.323	.500	1.375	2.375	6.281
	1.375	1"-14 x 1.625	1 3/8"-12 x 1.625	1 1/4"-12 x 1.625	1 1/4"-12 x 2.500	1.999		.625	1.125																		1.625	2.625	6.531
	1.750	1 1/4"-12 x 2.000	1 3/4"-12 x 2.000	1 1/2"-12 x 2.000	1 1/2"-12 x 3.000	2.374		.750	1.500																		1.875	2.875	6.781
	2.000	1 1/2"-12 x 2.250	2"-12 x 2.250	1 3/4"-12 x 2.250	1 3/4"-12 x 3.500	2.624		.875	1.688																		2.000	3.000	6.906
	2.500	1 7/8"-12 x 3.000	2 1/2"-12 x 3.000	2 1/4"-12 x 3.000	2 1/4"-12 x 4.500	3.124		1.000	2.062																		2.250	3.250	7.156
5.000	1.000	3/4"-16 x 1.125	1"-14 x 1.125	7/8"-14 x 1.125	7/8"-14 x 1.875	1.499	1.812	.500	.875	1/2"-20	5.500	1/2	-8	.625	1.750	1.250	.656	.438	.750	.938	4.500	5.375	3.000	4.285	4.101	.625	1.375	2.375	6.656
	1.375	1"-14 x 1.625	1 3/8"-12 x 1.625	1 1/4"-12 x 1.625	1 1/4"-12 x 2.500	1.999		.625	1.125																		1.625	2.625	6.906
	1.750	1 1/4"-12 x 2.000	1 3/4"-12 x 2.000	1 1/2"-12 x 2.000	1 1/2"-12 x 3.000	2.374		.750	1.500																		1.875	2.875	7.156
	2.000	1 1/2"-12 x 2.250	2"-12 x 2.250	1 3/4"-12 x 2.250	1 3/4"-12 x 3.500	2.624		.875	1.688																		2.000	3.000	7.281
	2.500	1 7/8"-12 x 3.000	2 1/2"-12 x 3.000	2 1/4"-12 x 3.000	2 1/4"-12 x 4.500	3.124		1.000	2.062																		2.250	3.250	7.531
	3.000	2 1/4"-12 x 3.500	3"-12 x 3.500	2 3/4"-12 x 3.500	2 3/4"-12 x 5.500	3.749		1.000	2.625																		2.250	3.250	7.531
	3.500	2 1/2"-12 x 3.500	3 1/2"-12 x 3.500	3 1/4"-12 x 3.500	3 1/4"-12 x 6.500	4.249		1.000	3.000																		2.250	3.250	7.531
6.000	1.375	1"-14 x 1.625	1 3/8"-12 x 1.625	1 1/4"-12 x 1.625	1 1/4"-12 x 2.500	1.999	1.812	.625	1.125	1/2"-20	6.500	3/4	-12	.750	2.000	1.500	.656	.438	.750	.938	5.000	6.375	3.250	4.992	4.879	.625	1.625	2.750	7.406
	1.750	1 1/4"-12 x 2.000	1 3/4"-12 x 2.000	1 1/2"-12 x 2.000	1 1/2"-12 x 3.000	2.374		.750	1.500																		1.875	3.000	7.656
	2.000	1 1/2"-12 x 2.250	2"-12 x 2.250	1 3/4"-12 x 2.250	1 3/4"-12 x 3.500	2.624		.875	1.688																		2.000	3.125	7.781
	2.500	1 7/8"-12 x 3.000	2 1/2"-12 x 3.000	2 1/4"-12 x 3.000	2 1/4"-12 x 4.500	3.124		1.000	2.062																		2.250	3.375	8.031
	3.000	2 1/4"-12 x 3.500	3"-12 x 3.500	2 3/4"-12 x 3.500	2 3/4"-12 x 5.500	3.749		1.000	2.625																		2.250	3.375	8.031
	3.500	2 1/2"-12 x 3.500	3 1/2"-12 x 3.500	3 1/4"-12 x 3.500	3 1/4"-12 x 6.500	4.249		1.000	3.000																		2.250	3.375	8.031
	4.000	3"-12 x 4.000	4"-12 x 4.000	3 3/4"-12 x 4.000	3 3/4"-12 x 7.500	4.749		1.000	3.375																		2.250	3.375	8.031
BORE	MM	KM & KF	KD	KI	KA	B	BB	C	D	DD	E	EE	ES	F	G	J	K	KB	KC	KN	LB	OD	P	R	RF	TR	WB	Y	ZB

NEVA DESIGN

FILE: 4.08_LH08S2.dwg REV: 02/09/2010

27650 Groesbeck Hwy • Roseville, MI 48066-2759 • Phone 586.775.7211 • Fax 586.775.4545 • Toll Free 800.526.7968 • e-mail: sales@peninsularcylinders.com • www.peninsularcylinders.com

CAP TIE ROD EXTENDED

Peninsular Mounting Style: **LH 11**

Low Pressure Steel Hydraulic Cylinder

BORE	WORKING P.S.I.	RATED P.S.I.
1.50	1500	2500
2.00	1500	2500
2.50	1000	1500
3.25	1000	1500
4.00	1000	1500
5.00	800	1200
6.00	800	1200

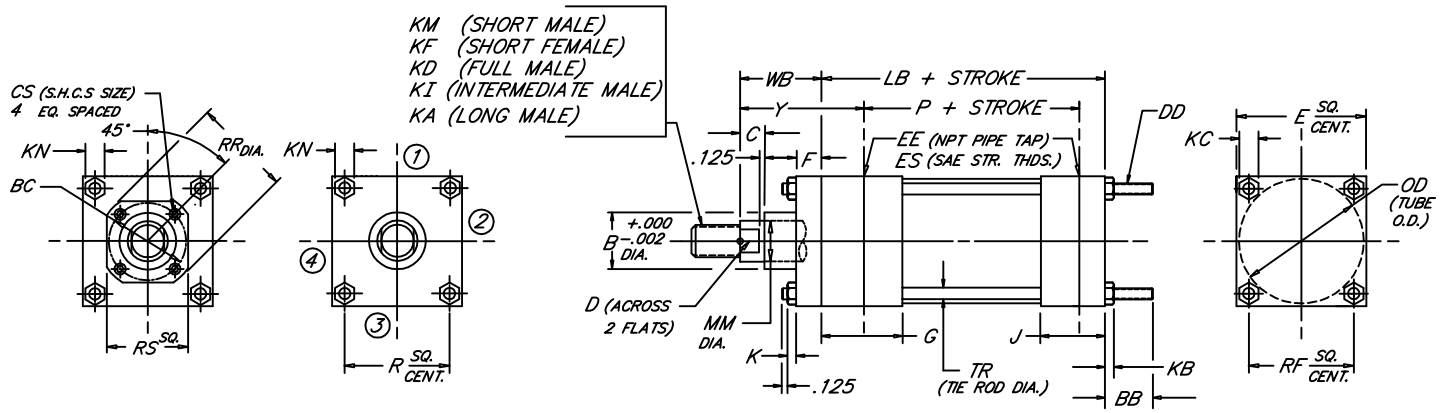

BORE	MM	ROD KM & KF	ROD KD	ROD KI	ROD KA	B	BB	BC	C	CS	D	DD	E	EE	ES	F	G	J	K	KB	KC	KN	LB	OD	P	R	RF	RR	RS	TR	WB	Y
		THREAD X LENGTH												NPT	SAE																	
1.500	.625	7/16"-20 x .750	5/8"-18 x .750	1/2"-20 x .750	1/2"-20 x 1.125	1.124	1.000	---	.375	---	.500	1/4"-28	2.000	3/8	-6	.375	1.500	1.000	.344	.218	.438	.500	3.625	1.750	2.335	1.478	1.428	---	---	.312	1.000	1.875
	1.000	3/4"-16 x 1.125	1"-14 x 1.125	7/8"-14 x 1.125	7/8"-14 x 1.875	1.499			.500		.875																				1.375	2.250
2.000	.625	7/16"-20 x .750	5/8"-18 x .750	1/2"-20 x .750	1/2"-20 x 1.125	1.124	1.125	---	.375	---	.500	5/16"-24	2.500	3/8	-6	.375	1.500	1.000	.406	.250	.500	.562	3.625	2.375	2.335	1.966	1.838	---	---	.375	1.000	1.875
	1.000	3/4"-16 x 1.125	1"-14 x 1.125	7/8"-14 x 1.125	7/8"-14 x 1.875	1.499			.500		.875																				1.375	2.250
	1.375	1"-14 x 1.625	1 3/8"-12 x 1.625	1 1/4"-12 x 1.625	1 1/4"-12 x 2.500	1.999			.625		1.125																				1.625	2.500
2.500	.625	7/16"-20 x .750	5/8"-18 x .750	1/2"-20 x .750	1/2"-20 x 1.125	1.124	1.125	---	.375	---	.500	5/16"-24	3.000	3/8	-6	.375	1.500	1.000	.406	.250	.500	.562	3.750	2.875	2.460	2.320	2.192	---	---	.375	1.000	1.875
	1.000	3/4"-16 x 1.125	1"-14 x 1.125	7/8"-14 x 1.125	7/8"-14 x 1.875	1.499			.500		.875																				1.375	2.250
	1.375	1"-14 x 1.625	1 3/8"-12 x 1.625	1 1/4"-12 x 1.625	1 1/4"-12 x 2.500	1.999			.625		1.125																				1.625	2.500
	1.750	1 1/4"-12 x 2.000	1 3/4"-12 x 2.000	1 1/2"-12 x 2.000	1 1/2"-12 x 3.000	2.374			.750		1.500																				1.875	2.750
3.250	1.000	3/4"-16 x 1.125	1"-14 x 1.125	7/8"-14 x 1.125	7/8"-14 x 1.875	1.499	1.375	---	.500	---	.875	3/8"-24	3.750	1/2	-8	.625	1.750	1.250	.531	.328	.562	.750	4.250	3.625	2.750	2.942	2.758	---	---	.500	1.375	2.375
	1.375	1"-14 x 1.625	1 3/8"-12 x 1.625	1 1/4"-12 x 1.625	1 1/4"-12 x 2.500	1.999			.625		1.125																				1.625	2.625
	1.750	1 1/4"-12 x 2.000	1 3/4"-12 x 2.000	1 1/2"-12 x 2.000	1 1/2"-12 x 3.000	2.374			.750		1.500																				1.875	2.875
	2.000	1 1/2"-12 x 2.250	2"-12 x 2.250	1 3/4"-12 x 2.250	1 3/4"-12 x 3.500	2.624			.875		1.688																				2.000	3.000
4.000	1.000	3/4"-16 x 1.125	1"-14 x 1.125	7/8"-14 x 1.125	7/8"-14 x 1.875	1.499	1.375	2.562	.500	.250	.875	3/8"-24	4.500	1/2	-8	.625	1.750	1.250	.531	.328	.562	.750	4.250	4.375	2.750	3.469	3.323	2.969	2.500	.500	1.375	2.375
	1.375	1"-14 x 1.625	1 3/8"-12 x 1.625	1 1/4"-12 x 1.625	1 1/4"-12 x 2.500	1.999		2.562	.625	.250	1.125																	2.969	2.500		1.625	2.625
	1.750	1 1/4"-12 x 2.000	1 3/4"-12 x 2.000	1 1/2"-12 x 2.000	1 1/2"-12 x 3.000	2.374		3.267	.750	.312	1.500																	3.734	3.000		1.875	2.875
	2.000	1 1/2"-12 x 2.250	2"-12 x 2.250	1 3/4"-12 x 2.250	1 3/4"-12 x 3.500	2.624		---	.875	---	1.688																	---	---		2.000	3.000
	2.500	1 7/8"-12 x 3.000	2 1/2"-12 x 3.000	2 1/4"-12 x 3.000	2 1/4"-12 x 4.500	3.124		---	1.000	---	2.062																	---	---		2.250	3.250
5.000	1.000	3/4"-16 x 1.125	1"-14 x 1.125	7/8"-14 x 1.125	7/8"-14 x 1.875	1.499	1.812	2.562	.500	.250	.875	1/2"-20	5.500	1/2	-8	.625	1.750	1.250	.656	.438	.750	.938	4.500	5.375	3.000	4.285	4.101	2.969	2.500	.625	1.375	2.375
	1.375	1"-14 x 1.625	1 3/8"-12 x 1.625	1 1/4"-12 x 1.625	1 1/4"-12 x 2.500	1.999		2.562	.625	.250	1.125																	2.969	2.500		1.625	2.625
	1.750	1 1/4"-12 x 2.000	1 3/4"-12 x 2.000	1 1/2"-12 x 2.000	1 1/2"-12 x 3.000	2.374		3.267	.750	.312	1.500																	3.734	3.000		1.875	2.875
	2.000	1 1/2"-12 x 2.250	2"-12 x 2.250	1 3/4"-12 x 2.250	1 3/4"-12 x 3.500	2.624		3.812	.875	.312	1.688																	4.312	3.750		2.000	3.000
	2.500	1 7/8"-12 x 3.000	2 1/2"-12 x 3.000	2 1/4"-12 x 3.000	2 1/4"-12 x 4.500	3.124		3.812	1.000	.312	2.062																	4.312	3.750		2.250	3.250
	3.000	2 1/4"-12 x 3.500	3"-12 x 3.500	2 3/4"-12 x 3.500	2 3/4"-12 x 5.500	3.749		---	1.000	---	2.625																	---	---		2.250	3.250
	3.500	2 1/2"-12 x 3.500	3 1/2"-12 x 3.500	3 1/4"-12 x 3.500	3 1/4"-12 x 6.500	4.249		---	1.000	---	3.000																	---	---		2.250	3.250
6.000	1.375	1"-14 x 1.625	1 3/8"-12 x 1.625	1 1/4"-12 x 1.625	1 1/4"-12 x 2.500	1.999	1.812	3.267	.625	.312	1.125	1/2"-20	6.500	3/4	-12	.625	2.000	1.500	.656	.438	.750	.938	5.000	6.375	3.250	4.992	4.879	3.734	3.000	.625	1.625	2.750
	1.750	1 1/4"-12 x 2.000	1 3/4"-12 x 2.000	1 1/2"-12 x 2.000	1 1/2"-12 x 3.000	2.374		3.267	.750	.312	1.500					.625												3.734	3.000		1.875	3.000
	2.000	1 1/2"-12 x 2.250	2"-12 x 2.250	1 3/4"-12 x 2.250	1 3/4"-12 x 3.500	2.624		3.812	.875	.312	1.688					.625												4.312	3.750		2.000	3.125
	2.500	1 7/8"-12 x 3.000	2 1/2"-12 x 3.000	2 1/4"-12 x 3.000	2 1/4"-12 x 4.500	3.124		3.812	1.000	.312	2.062					.625												4.312	3.750		2.250	3.375
	3.000	2 1/4"-12 x 3.500	3"-12 x 3.500	2 3/4"-12 x 3.500	2 3/4"-12 x 5.500	3.749		4.700	1.000	.375	2.625					.625												5.562	4.500		2.250	3.375
	3.500	2 1/2"-12 x 3.500	3 1/2"-12 x 3.500	3 1/4"-12 x 3.500	3 1/4"-12 x 6.500	4.249		5.200	1.000	.375	3.000					.625												6.062	5.000		2.250	3.375
	4.000	3"-12 x 4.000	4"-12 x 4.000	3 3/4"-12 x 4.000	3 3/4"-12 x 7.500	4.749		---	1.000	---	3.375					.750												---	---		2.250	3.375
BORE	MM	KM & KF	KD	KI	KA	B	BB	BC	C	CS	D	DD	E	EE	ES	F	G	J	K	KB	KC	KN	LB	OD	P	R	RF	RR	RS	TR	WB	Y

NEVA DESIGN

FILE: 4.11_LH11S2.dwg REV: 02/09/2010

27650 Groesbeck Hwy • Roseville, MI 48066-2759 • Phone 586.775.7211 • Fax 586.775.4545 • Toll Free 800.526.7968 • e-mail: sales@peninsularcylinders.com • www.peninsularcylinders.com

HEAD & CAP TIE ROD EXTENDED

Peninsular Mounting Style: **LH 12**

Low Pressure Steel Hydraulic Cylinder

BORE	WORKING P.S.I.	RATED P.S.I.
1.50	1500	2500
2.00	1500	2500
2.50	1000	1500
3.25	1000	1500
4.00	1000	1500
5.00	800	1200
6.00	800	1200

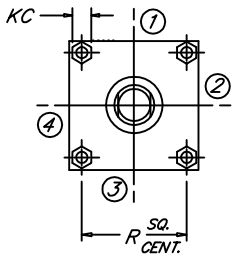

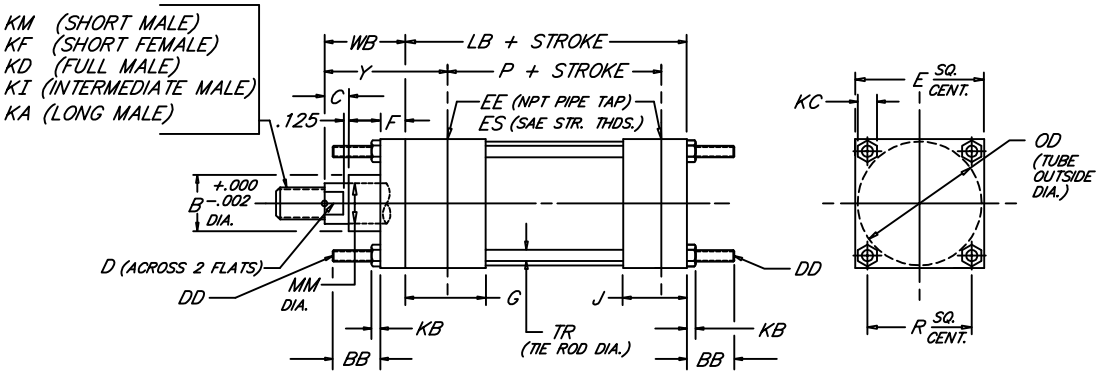

BORE	ROD MM	ROD THREAD X LENGTH KM & KF	KD	KI	KA	B	BB	C	D	DD	E	NPT/SAE EE	ES	F	G	J	KB	KC	LB	OD	P	R	TR	WB	Y
1.500	.625	7/16"-20 x .750	5/8"-18 x .750	1/2"-20 x .750	1/2"-20 x 1.125	1.124	1.000	.375	.500	1/4"-28	2.000	3/8	-6	.375	1.500	1.000	.218	.438	3.625	1.750	2.335	1.428	.250	1.000	1.875
	1.000	3/4"-16 x 1.125	1"-14 x 1.125	7/8"-14 x 1.125	7/8"-14 x 1.875	1.499		.500	.875															1.375	2.250
2.000	.625	7/16"-20 x .750	5/8"-18 x .750	1/2"-20 x .750	1/2"-20 x 1.125	1.124	1.125	.375	.500	5/16"-24	2.500	3/8	-6	.375	1.500	1.000	.250	.500	3.625	2.250	2.335	1.838	.312	1.000	1.875
	1.000	3/4"-16 x 1.125	1"-14 x 1.125	7/8"-14 x 1.125	7/8"-14 x 1.875	1.499		.500	.875															1.375	2.250
	1.375	1"-14 x 1.625	1 3/8"-12 x 1.625	1 1/4"-12 x 1.625	1 1/4"-12 x 2.500	1.999		.625	1.125															1.625	2.500
2.500	.625	7/16"-20 x .750	5/8"-18 x .750	1/2"-20 x .750	1/2"-20 x 1.125	1.124	1.125	.375	.500	5/16"-24	3.000	3/8	-6	.375	1.500	1.000	.250	.500	3.750	2.750	2.460	2.192	.312	1.000	1.875
	1.000	3/4"-16 x 1.125	1"-14 x 1.125	7/8"-14 x 1.125	7/8"-14 x 1.875	1.499		.500	.875															1.375	2.250
	1.375	1"-14 x 1.625	1 3/8"-12 x 1.625	1 1/4"-12 x 1.625	1 1/4"-12 x 2.500	1.999		.625	1.125															1.625	2.500
	1.750	1 1/4"-12 x 2.000	1 3/4"-12 x 2.000	1 1/2"-12 x 2.000	1 1/2"-12 x 3.000	2.374		.750	1.500															1.875	2.750
3.250	1.000	3/4"-16 x 1.125	1"-14 x 1.125	7/8"-14 x 1.125	7/8"-14 x 1.875	1.499	1.375	.500	.875	3/8"-24	3.750	1/2	-8	.625	1.750	1.250	.328	.562	4.250	3.500	2.750	2.758	.375	1.375	2.375
	1.375	1"-14 x 1.625	1 3/8"-12 x 1.625	1 1/4"-12 x 1.625	1 1/4"-12 x 2.500	1.999		.625	1.125															1.625	2.625
	1.750	1 1/4"-12 x 2.000	1 3/4"-12 x 2.000	1 1/2"-12 x 2.000	1 1/2"-12 x 3.000	2.374		.750	1.500															1.875	2.875
	2.000	1 1/2"-12 x 2.250	2"-12 x 2.250	1 3/4"-12 x 2.250	1 3/4"-12 x 3.500	2.624		.875	1.688															2.000	3.000
4.000	1.000	3/4"-16 x 1.125	1"-14 x 1.125	7/8"-14 x 1.125	7/8"-14 x 1.875	1.499	1.375	.500	.875	3/8"-24	4.500	1/2	-8	.625	1.750	1.250	.328	.562	4.250	4.250	2.750	3.323	.375	1.375	2.375
	1.375	1"-14 x 1.625	1 3/8"-12 x 1.625	1 1/4"-12 x 1.625	1 1/4"-12 x 2.500	1.999		.625	1.125															1.625	2.625
	1.750	1 1/4"-12 x 2.000	1 3/4"-12 x 2.000	1 1/2"-12 x 2.000	1 1/2"-12 x 3.000	2.374		.750	1.500															1.875	2.875
	2.000	1 1/2"-12 x 2.250	2"-12 x 2.250	1 3/4"-12 x 2.250	1 3/4"-12 x 3.500	2.624		.875	1.688															2.000	3.000
	2.500	1 7/8"-12 x 3.000	2 1/2"-12 x 3.000	2 1/4"-12 x 3.000	2 1/4"-12 x 4.500	3.124		1.000	2.062															2.250	3.250
5.000	1.000	3/4"-16 x 1.125	1"-14 x 1.125	7/8"-14 x 1.125	7/8"-14 x 1.875	1.499	1.812	.500	.875	1/2"-20	5.500	1/2	-8	.625	1.750	1.250	.438	.750	4.500	5.250	3.000	4.101	.500	1.375	2.375
	1.375	1"-14 x 1.625	1 3/8"-12 x 1.625	1 1/4"-12 x 1.625	1 1/4"-12 x 2.500	1.999		.625	1.125															1.625	2.625
	1.750	1 1/4"-12 x 2.000	1 3/4"-12 x 2.000	1 1/2"-12 x 2.000	1 1/2"-12 x 3.000	2.374		.750	1.500															1.875	2.875
	2.000	1 1/2"-12 x 2.250	2"-12 x 2.250	1 3/4"-12 x 2.250	1 3/4"-12 x 3.500	2.624		.875	1.688															2.000	3.000
	2.500	1 7/8"-12 x 3.000	2 1/2"-12 x 3.000	2 1/4"-12 x 3.000	2 1/4"-12 x 4.500	3.124		1.000	2.062															2.250	3.250
	3.000	2 1/4"-12 x 3.500	3"-12 x 3.500	2 3/4"-12 x 3.500	2 3/4"-12 x 5.500	3.749		1.000	2.625															2.250	3.250
	3.500	2 1/2"-12 x 3.500	3 1/2"-12 x 3.500	3 1/4"-12 x 3.500	3 1/4"-12 x 6.500	4.249		1.000	3.000															2.250	3.250
6.000	1.375	1"-14 x 1.625	1 3/8"-12 x 1.625	1 1/4"-12 x 1.625	1 1/4"-12 x 2.500	1.999	1.812	.625	1.125	1/2"-20	6.500	3/4	-12	.750	2.000	1.500	.438	.750	5.000	6.250	3.250	4.879	.500	1.625	2.750
	1.750	1 1/4"-12 x 2.000	1 3/4"-12 x 2.000	1 1/2"-12 x 2.000	1 1/2"-12 x 3.000	2.374		.750	1.500															1.875	3.000
	2.000	1 1/2"-12 x 2.250	2"-12 x 2.250	1 3/4"-12 x 2.250	1 3/4"-12 x 3.500	2.624		.875	1.688															2.000	3.125
	2.500	1 7/8"-12 x 3.000	2 1/2"-12 x 3.000	2 1/4"-12 x 3.000	2 1/4"-12 x 4.500	3.124		1.000	2.062															2.250	3.375
	3.000	2 1/4"-12 x 3.500	3"-12 x 3.500	2 3/4"-12 x 3.500	2 3/4"-12 x 5.500	3.749		1.000	2.625															2.250	3.375
	3.500	2 1/2"-12 x 3.500	3 1/2"-12 x 3.500	3 1/4"-12 x 3.500	3 1/4"-12 x 6.500	4.249		1.000	3.000															2.250	3.375
	4.000	3"-12 x 4.000	4"-12 x 4.000	3 3/4"-12 x 4.000	3 3/4"-12 x 7.500	4.749		1.000	3.375															2.250	3.375
BORE	MM	KM & KF	KD	KI	KA	B	BB	C	D	DD	E	EE	ES	F	G	J	KB	KC	LB	OD	P	R	TR	WB	Y

NEVA DESIGN

FILE: 4.12_LH12S2.dwg REV: 02/09/2010

27650 Groesbeck Hwy • Roseville, MI 48066-2759 • Phone 586.775.7211 • Fax 586.775.4545 • Toll Free 800.526.7968 • e-mail: sales@peninsularcylinders.com • www.peninsularcylinders.com

END ANGLES

Peninsular Mounting Style: **LH 13**

Low Pressure Steel Hydraulic Cylinder

BORE	WORKING P.S.I.	RATED P.S.I.
1.50	1500	2500
2.00	1500	2500
2.50	1000	1500
3.25	1000	1500
4.00	1000	1500
5.00	800	1200
6.00	800	1200

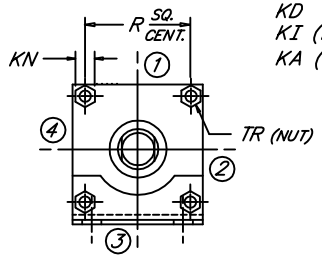

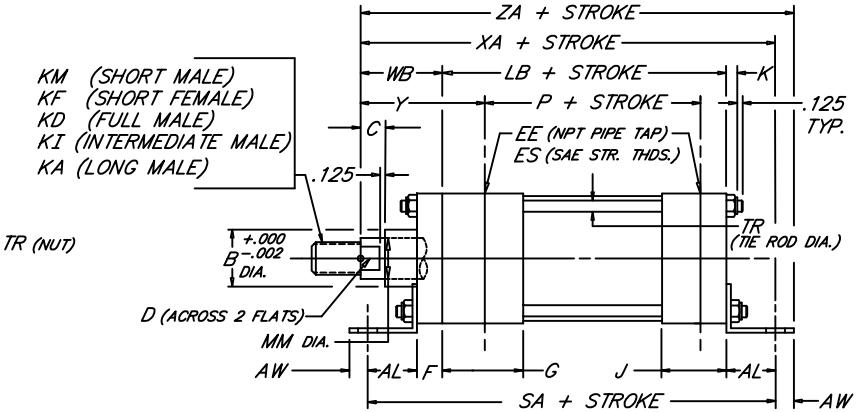

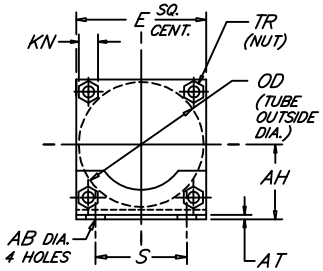

BORE	ROD MM	ROD THREAD X LENGTH KM & KF	KD	KI	KA	AB	AH	AL	AT	AW	B	C	D	E	NPT/SAE EE	ES	F	G	J	K	KN	LB	OD	P	R	S	SA	TR	WB	XA	Y	ZA
1.500	.625	7/16"-20 x .750	5/8"-18 x .750	1/2"-20 x .750	1/2"-20 x 1.125	.438	1.188	1.000	.125	.375	1.124	.375	.500	2.000	3/8	-6	.375	1.500	1.000	.344	.500	3.625	1.750	2.335	1.478	1.250	6.000	.312	1.000	5.625	1.875	6.000
	1.000	3/4"-16 x 1.125	1"-14 x 1.125	7/8"-14 x 1.125	7/8"-14 x 1.875						1.499	.500	.875																1.375	6.000	2.250	6.375
2.000	.625	7/16"-20 x .750	5/8"-18 x .750	1/2"-20 x .750	1/2"-20 x 1.125	.438	1.438	1.000	.125	.375	1.124	.375	.500	2.500	3/8	-6	.375	1.500	1.000	.406	.562	3.625	2.375	2.335	1.966	1.750	6.000	.375	1.000	5.625	1.875	6.000
	1.000	3/4"-16 x 1.125	1"-14 x 1.125	7/8"-14 x 1.125	7/8"-14 x 1.875						1.499	.500	.875																1.375	6.000	2.250	6.375
	1.375	1"-14 x 1.625	1 3/8"-12 x 1.625	1 1/4"-12 x 1.625	1 1/4"-12 x 2.500						1.999	.625	1.125																1.625	6.250	2.500	6.625
2.500	.625	7/16"-20 x .750	5/8"-18 x .750	1/2"-20 x .750	1/2"-20 x 1.125	.438	1.625	1.000	.125	.375	1.124	.375	.500	3.000	3/8	-6	.375	1.500	1.000	.406	.562	3.750	2.875	2.460	2.320	2.250	6.125	.375	1.000	5.750	1.875	6.125
	1.000	3/4"-16 x 1.125	1"-14 x 1.125	7/8"-14 x 1.125	7/8"-14 x 1.875						1.499	.500	.875																1.375	6.125	2.250	6.500
	1.375	1"-14 x 1.625	1 3/8"-12 x 1.625	1 1/4"-12 x 1.625	1 1/4"-12 x 2.500						1.999	.625	1.125																1.625	6.375	2.500	6.750
	1.750	1 1/4"-12 x 2.000	1 3/4"-12 x 2.000	1 1/2"-12 x 2.000	1 1/2"-12 x 3.000						2.374	.750	1.500																1.875	6.625	2.750	7.000
3.250	1.000	3/4"-16 x 1.125	1"-14 x 1.125	7/8"-14 x 1.125	7/8"-14 x 1.875	.562	1.938	1.250	.125	.500	1.499	.500	.875	3.750	1/2	-8	.625	1.750	1.250	.531	.750	4.250	3.625	2.750	2.942	2.750	7.375	.500	1.375	6.875	2.375	7.375
	1.375	1"-14 x 1.625	1 3/8"-12 x 1.625	1 1/4"-12 x 1.625	1 1/4"-12 x 2.500						1.999	.625	1.125																1.625	7.125	2.625	7.625
	1.750	1 1/4"-12 x 2.000	1 3/4"-12 x 2.000	1 1/2"-12 x 2.000	1 1/2"-12 x 3.000						2.374	.750	1.500																1.875	7.375	2.875	7.875
	2.000	1 1/2"-12 x 2.250	2"-12 x 2.250	1 3/4"-12 x 2.250	1 3/4"-12 x 3.500						2.624	.875	1.688																2.000	7.500	3.000	8.000
4.000	1.000	3/4"-16 x 1.125	1"-14 x 1.125	7/8"-14 x 1.125	7/8"-14 x 1.875	.562	2.250	1.250	.125	.500	1.499	.500	.875	4.500	1/2	-8	.625	1.750	1.250	.531	.750	4.250	4.375	2.750	3.469	3.500	7.375	.500	1.375	6.875	2.375	7.375
	1.375	1"-14 x 1.625	1 3/8"-12 x 1.625	1 1/4"-12 x 1.625	1 1/4"-12 x 2.500						1.999	.625	1.125																1.625	7.125	2.625	7.625
	1.750	1 1/4"-12 x 2.000	1 3/4"-12 x 2.000	1 1/2"-12 x 2.000	1 1/2"-12 x 3.000						2.374	.750	1.500																1.875	7.375	2.875	7.875
	2.000	1 1/2"-12 x 2.250	2"-12 x 2.250	1 3/4"-12 x 2.250	1 3/4"-12 x 3.500						2.624	.875	1.688																2.000	7.500	3.000	8.000
	2.500	1 7/8"-12 x 3.000	2 1/2"-12 x 3.000	2 1/4"-12 x 3.000	2 1/4"-12 x 4.500						3.124	1.000	2.062																2.250	7.750	3.250	8.250
5.000	1.000	3/4"-16 x 1.125	1"-14 x 1.125	7/8"-14 x 1.125	7/8"-14 x 1.875	.688	2.750	1.375	.188	.625	1.499	.500	.875	5.500	1/2	-8	.625	1.750	1.250	.656	.938	4.500	5.375	3.000	4.285	4.250	7.875	.625	1.375	7.250	2.375	7.875
	1.375	1"-14 x 1.625	1 3/8"-12 x 1.625	1 1/4"-12 x 1.625	1 1/4"-12 x 2.500						1.999	.625	1.125																1.625	7.500	2.625	8.125
	1.750	1 1/4"-12 x 2.000	1 3/4"-12 x 2.000	1 1/2"-12 x 2.000	1 1/2"-12 x 3.000						2.374	.750	1.500																1.875	7.750	2.875	8.375
	2.000	1 1/2"-12 x 2.250	2"-12 x 2.250	1 3/4"-12 x 2.250	1 3/4"-12 x 3.500						2.624	.875	1.688																2.000	7.875	3.000	8.500
	2.500	1 7/8"-12 x 3.000	2 1/2"-12 x 3.000	2 1/4"-12 x 3.000	2 1/4"-12 x 4.500						3.124	1.000	2.062																2.250	8.125	3.250	8.750
	3.000	2 1/4"-12 x 3.500	3"-12 x 3.500	2 3/4"-12 x 3.500	2 3/4"-12 x 5.500						3.749	1.000	2.625																2.250	8.125	3.250	8.750
	3.500	2 1/2"-12 x 3.500	3 1/2"-12 x 3.500	3 1/4"-12 x 3.500	3 1/4"-12 x 6.500						4.249	1.000	3.000																2.250	8.125	3.250	8.750
6.000	1.375	1"-14 x 1.625	1 3/8"-12 x 1.625	1 1/4"-12 x 1.625	1 1/4"-12 x 2.500	.812	3.250	1.375	.188	.625	1.999	.625	1.125	6.500	3/4	-12	.750	2.000	1.500	.656	.938	5.000	6.375	3.250	4.992	5.250	8.500	.625	1.625	8.000	2.750	8.625
	1.750	1 1/4"-12 x 2.000	1 3/4"-12 x 2.000	1 1/2"-12 x 2.000	1 1/2"-12 x 3.000						2.374	.750	1.500																1.875	8.250	3.000	8.875
	2.000	1 1/2"-12 x 2.250	2"-12 x 2.250	1 3/4"-12 x 2.250	1 3/4"-12 x 3.500						2.624	.875	1.688																2.000	8.375	3.125	9.000
	2.500	1 7/8"-12 x 3.000	2 1/2"-12 x 3.000	2 1/4"-12 x 3.000	2 1/4"-12 x 4.500						3.124	1.000	2.062																2.250	8.625	3.375	9.250
	3.000	2 1/4"-12 x 3.500	3"-12 x 3.500	2 3/4"-12 x 3.500	2 3/4"-12 x 5.500						3.749	1.000	2.625																2.250	8.625	3.375	9.250
	3.500	2 1/2"-12 x 3.500	3 1/2"-12 x 3.500	3 1/4"-12 x 3.500	3 1/4"-12 x 6.500						4.249	1.000	3.000																2.250	8.625	3.375	9.250
	4.000	3"-12 x 4.000	4"-12 x 4.000	3 3/4"-12 x 4.000	3 3/4"-12 x 7.500						4.749	1.000	3.375																2.250	8.625	3.375	9.250
BORE	MM	KM & KF	KD	KI	KA	AB	AH	AL	AT	AW	B	C	D	E	EE	ES	F	G	J	K	KN	LB	OD	P	R	S	SA	TR	WB	XA	Y	ZA

NEVA DESIGN

FILE: 4.13_LH13S2.dwg REV: 02/09/2010

27650 Groesbeck Hwy • Roseville, MI 48066-2759 • Phone 586.775.7211 • Fax 586.775.4545 • Toll Free 800.526.7968 • e-mail: sales@peninsularcylinders.com • www.peninsularcylinders.com

END LUGS

Low Pressure Steel Hydraulic Cylinder

BORE	1.50	2.00	2.50	3.25	4.00	5.00	6.00
WORKING P.S.I.	1500	1500	1000	1000	1000	800	800
RATED P.S.I.	2500	2500	1500	1500	1500	1200	1200

Peninsular Mounting Style: **LH 14**

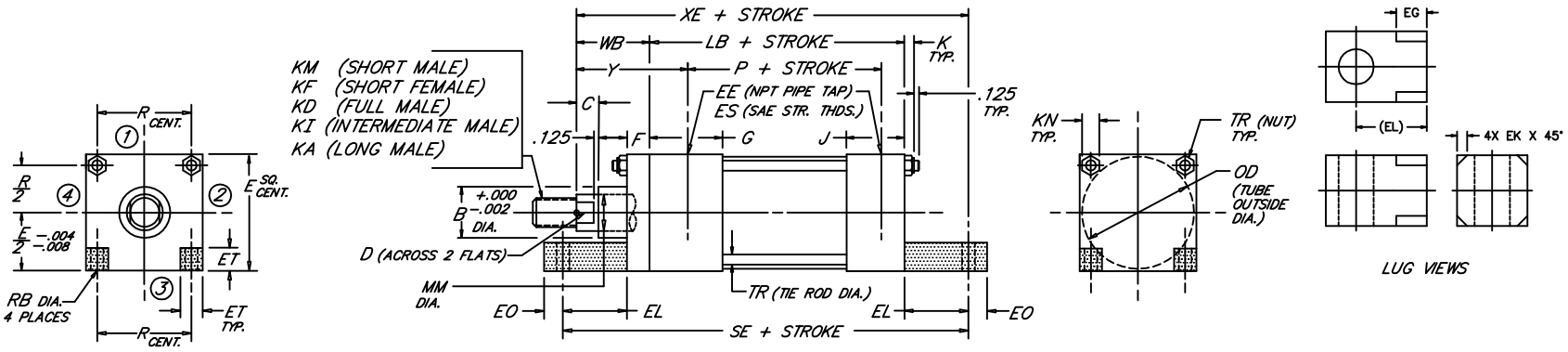

BORE	ROD MM	ROD THREAD X LENGTH KM & KF	KD	KI	KA	B	C	D	E	NPT/SAE EE	ES	EG	EK	EL	EO	ET	F	G	J	K	KN	LB	OD	P	R	RB	SE	TR	WB	XE	Y
1.500	.625	7/16"-20 x .750	5/8"-18 x .750	1/2"-20 x .750	1/2"-20 x 1.125	1.124	.375	.500	2.000	3/8	-6	---	---	.750	.250	.562	.375	1.500	1.000	.344	.500	3.625	1.750	2.335	1.43	.312	5.500	.312	1.000	5.375	1.875
	1.000	3/4"-16 x 1.125	1"-14 x 1.125	7/8"-14 x 1.125	7/8"-14 x 1.875	1.499	.500	.875				.620	.190																1.375	5.750	2.250
2.000	.625	7/16"-20 x .750	5/8"-18 x .750	1/2"-20 x .750	1/2"-20 x 1.125	1.124	.375	.500	2.500	3/8	-6	---	---	.938	.312	.625	.375	1.500	1.000	.406	.562	3.625	2.375	2.335	1.84	.375	5.875	.375	1.000	5.562	1.875
	1.000	3/4"-16 x 1.125	1"-14 x 1.125	7/8"-14 x 1.125	7/8"-14 x 1.875	1.499	.500	.875				---	---																1.375	5.938	2.250
	1.375	1"-14 x 1.625	1 3/8"-12 x 1.625	1 1/4"-12 x 1.625	1 1/4"-12 x 2.500	1.999	.625	1.125				.750	.190																1.625	6.188	2.500
2.500	.625	7/16"-20 x .750	5/8"-18 x .750	1/2"-20 x .750	1/2"-20 x 1.125	1.124	.375	.500	3.000	3/8	-6	---	---	1.062	.312	.781	.375	1.500	1.000	.406	.562	3.750	2.875	2.460	2.19	.375	6.250	.375	1.000	5.812	1.875
	1.000	3/4"-16 x 1.125	1"-14 x 1.125	7/8"-14 x 1.125	7/8"-14 x 1.875	1.499	.500	.875				---	---																1.375	6.188	2.250
	1.375	1"-14 x 1.625	1 3/8"-12 x 1.625	1 1/4"-12 x 1.625	1 1/4"-12 x 2.500	1.999	.625	1.125				---	---																1.625	6.438	2.500
	1.750	1 1/4"-12 x 2.000	1 3/4"-12 x 2.000	1 1/2"-12 x 2.000	1 1/2"-12 x 3.000	2.374	.750	1.500				.880	.250																1.875	6.688	2.750
3.250	1.000	3/4"-16 x 1.125	1"-14 x 1.125	7/8"-14 x 1.125	7/8"-14 x 1.875	1.499	.500	.875	3.750	1/2	-8	---	---	.875	.375	1.000	.625	1.750	1.250	.531	.750	4.250	3.625	2.750	2.76	.438	6.625	.500	1.375	6.500	2.375
	1.375	1"-14 x 1.625	1 3/8"-12 x 1.625	1 1/4"-12 x 1.625	1 1/4"-12 x 2.500	1.999	.625	1.125				---	---																1.625	6.750	2.625
	1.750	1 1/4"-12 x 2.000	1 3/4"-12 x 2.000	1 1/2"-12 x 2.000	1 1/2"-12 x 3.000	2.374	.750	1.500				---	---																1.875	7.000	2.875
	2.000	1 1/2"-12 x 2.250	2"-12 x 2.250	1 3/4"-12 x 2.250	1 3/4"-12 x 3.500	2.624	.875	1.688				.620	.120																2.000	7.125	3.000
4.000	1.000	3/4"-16 x 1.125	1"-14 x 1.125	7/8"-14 x 1.125	7/8"-14 x 1.875	1.499	.500	.875	4.500	1/2	-8	---	---	1.000	.375	1.188	.625	1.750	1.250	.531	.750	4.250	4.375	2.750	3.32	.438	6.875	.500	1.375	6.625	2.375
	1.375	1"-14 x 1.625	1 3/8"-12 x 1.625	1 1/4"-12 x 1.625	1 1/4"-12 x 2.500	1.999	.625	1.125				---	---																1.625	6.875	2.625
	1.750	1 1/4"-12 x 2.000	1 3/4"-12 x 2.000	1 1/2"-12 x 2.000	1 1/2"-12 x 3.000	2.374	.750	1.500				---	---																1.875	7.125	2.875
	2.000	1 1/2"-12 x 2.250	2"-12 x 2.250	1 3/4"-12 x 2.250	1 3/4"-12 x 3.500	2.624	.875	1.688				---	---																2.000	7.250	3.000
	2.500	1 7/8"-12 x 3.000	2 1/2"-12 x 3.000	2 1/4"-12 x 3.000	2 1/4"-12 x 4.500	3.124	1.000	2.062				.750	.090																2.250	7.500	3.250
5.000	1.000	3/4"-16 x 1.125	1"-14 x 1.125	7/8"-14 x 1.125	7/8"-14 x 1.875	1.499	.500	.875	5.500	1/2	-8	---	---	1.062	.500	1.375	.625	1.750	1.250	.656	.938	4.500	5.375	3.000	4.10	.562	7.250	.625	1.375	6.938	2.375
	1.375	1"-14 x 1.625	1 3/8"-12 x 1.625	1 1/4"-12 x 1.625	1 1/4"-12 x 2.500	1.999	.625	1.125				---	---																1.625	7.188	2.625
	1.750	1 1/4"-12 x 2.000	1 3/4"-12 x 2.000	1 1/2"-12 x 2.000	1 1/2"-12 x 3.000	2.374	.750	1.500				---	---																1.875	7.438	2.875
	2.000	1 1/2"-12 x 2.250	2"-12 x 2.250	1 3/4"-12 x 2.250	1 3/4"-12 x 3.500	2.624	.875	1.688				---	---																2.000	7.562	3.000
	2.500	1 7/8"-12 x 3.000	2 1/2"-12 x 3.000	2 1/4"-12 x 3.000	2 1/4"-12 x 4.500	3.124	1.000	2.062				---	---																2.250	7.812	3.250
	3.000	2 1/4"-12 x 3.500	3"-12 x 3.500	2 3/4"-12 x 3.500	2 3/4"-12 x 5.500	3.749	1.000	2.625				---	---																2.250	7.812	3.250
	3.500	2 1/2"-12 x 3.500	3 1/2"-12 x 3.500	3 1/4"-12 x 3.500	3 1/4"-12 x 6.500	4.249	1.000	3.000				.750	.280																2.250	7.812	3.250
6.000	1.375	1"-14 x 1.625	1 3/8"-12 x 1.625	1 1/4"-12 x 1.625	1 1/4"-12 x 2.500	1.999	.625	1.125	6.500	3/4	-12	---	---	1.000	.500	1.625	.750	2.000	1.500	.656	.938	5.000	6.375	3.250	4.88	.562	7.750	.625	1.625	7.625	2.750
	1.750	1 1/4"-12 x 2.000	1 3/4"-12 x 2.000	1 1/2"-12 x 2.000	1 1/2"-12 x 3.000	2.374	.750	1.500				---	---																1.875	7.875	3.000
	2.000	1 1/2"-12 x 2.250	2"-12 x 2.250	1 3/4"-12 x 2.250	1 3/4"-12 x 3.500	2.624	.875	1.688				---	---																2.000	8.000	3.125
	2.500	1 7/8"-12 x 3.000	2 1/2"-12 x 3.000	2 1/4"-12 x 3.000	2 1/4"-12 x 4.500	3.124	1.000	2.062				---	---																2.250	8.250	3.375
	3.000	2 1/4"-12 x 3.500	3"-12 x 3.500	2 3/4"-12 x 3.500	2 3/4"-12 x 5.500	3.749	1.000	2.625				---	---																2.250	8.250	3.375
	3.500	2 1/2"-12 x 3.500	3 1/2"-12 x 3.500	3 1/4"-12 x 3.500	3 1/4"-12 x 6.500	4.249	1.000	3.000				---	---																2.250	8.250	3.375
	4.000	3"-12 x 4.000	4"-12 x 4.000	3 3/4"-12 x 4.000	3 3/4"-12 x 7.500	4.749	1.000	3.375				.620	.120																2.250	8.250	3.375
BORE	MM	KM & KF	KD	KI	KA	B	C	D	E	EE	ES	EG	EK	EL	EO	ET	F	G	J	K	KN	LB	OD	P	R	RB	SE	TR	WB	XE	Y

NEVA DESIGN

FILE: 4.14_LH14S2.dwg REV: 02/09/2010

27650 Groesbeck Hwy • Roseville, MI 48066-2759 • Phone 586.775.7211 • Fax 586.775.4545 • Toll Free 800.526.7968 • e-mail: sales@peninsularcylinders.com • www.peninsularcylinders.com

CENTERLINE LUGS

Peninsular Mounting Style: **LH 15**

Low Pressure Steel Hydraulic Cylinder

BORE	WORKING P.S.I.	RATED P.S.I.
1.50	1500	2500
2.00	1500	2500
2.50	1000	1500
3.25	1000	1500
4.00	1000	1500
5.00	800	1200
6.00	800	1200

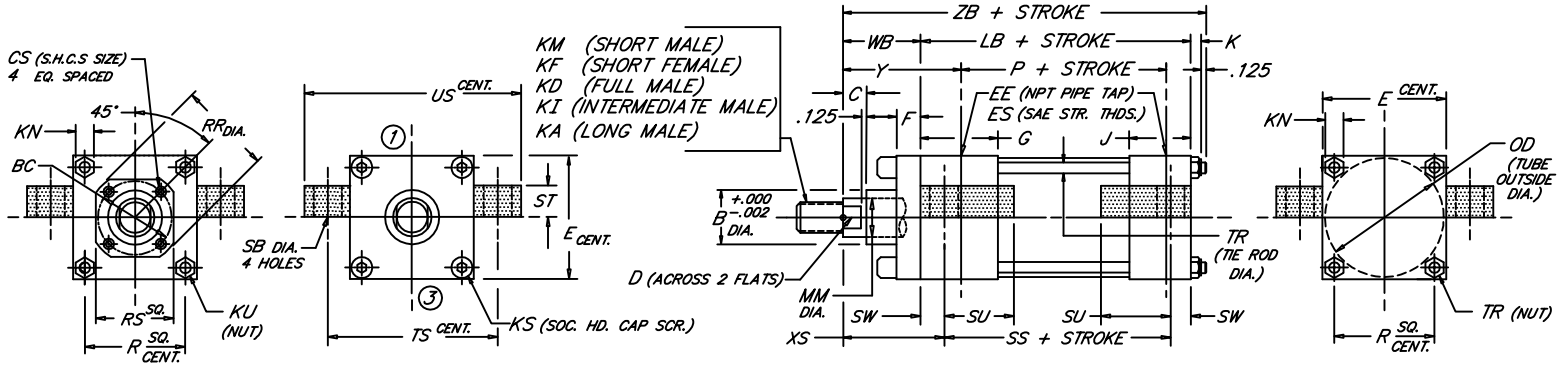

BORE	ROD MM	ROD THREAD X LENGTH KM & KF	KD	KI	KA	B	BC	C	CS	D	E	NPT/SAE EE	ES	F	G	J	K	KN	KS	KU	LB	OD	P	R	RR	RS	SB	SS	ST	SU	SW	TR	TS	US	WB	XS	Y	ZB
1.500	.625	7/16"-20 x .750	5/8"-18 x .750	1/2"-20 x .750	1/2"-20 x 1.125	1.124	---	.375	---	.500	2.000	3/8	-6	.375	1.500	1.000	.344	.500	.312	---	3.625	1.750	2.335	1.478	---	---	.438	2.875	.500	.938	.375	.312	2.750	3.500	1.000	1.375	1.875	5.094
	1.000	3/4"-16 x 1.125	1"-14 x 1.125	7/8"-14 x 1.125	7/8"-14 x 1.875	1.499		.500		.875																									1.375	1.750	2.250	5.469
2.000	.625	7/16"-20 x .750	5/8"-18 x .750	1/2"-20 x .750	1/2"-20 x 1.125	1.124	---	.375	---	.500	2.500	3/8	-6	.375	1.500	1.000	.406	.562	.375	---	3.625	2.375	2.335	1.966	---	---	.438	2.875	.500	.938	.375	.375	3.250	4.000	1.000	1.375	1.875	5.156
	1.000	3/4"-16 x 1.125	1"-14 x 1.125	7/8"-14 x 1.125	7/8"-14 x 1.875	1.499		.500		.875																									1.375	1.750	2.250	5.531
	1.375	1"-14 x 1.625	1 3/8"-12 x 1.625	1 1/4"-12 x 1.625	1 1/4"-12 x 2.500	1.999		.625		1.125																									1.625	2.000	2.500	5.781
2.500	.625	7/16"-20 x .750	5/8"-18 x .750	1/2"-20 x .750	1/2"-20 x 1.125	1.124	---	.375	---	.500	3.000	3/8	-6	.375	1.500	1.000	.406	.562	.375	---	3.750	2.875	2.460	2.320	---	---	.438	3.000	.500	.938	.375	.375	3.750	4.500	1.000	1.375	1.875	5.281
	1.000	3/4"-16 x 1.125	1"-14 x 1.125	7/8"-14 x 1.125	7/8"-14 x 1.875	1.499		.500		.875																									1.375	1.750	2.250	5.656
	1.375	1"-14 x 1.625	1 3/8"-12 x 1.625	1 1/4"-12 x 1.625	1 1/4"-12 x 2.500	1.999		.625		1.125																									1.625	2.000	2.500	5.906
	1.750	1 1/4"-12 x 2.000	1 3/4"-12 x 2.000	1 1/2"-12 x 2.000	1 1/2"-12 x 3.000	2.374		.750		1.500																									1.875	2.250	2.750	6.156
3.250	1.000	3/4"-16 x 1.125	1"-14 x 1.125	7/8"-14 x 1.125	7/8"-14 x 1.875	1.499	---	.500	---	.875	3.750	1/2	-8	.625	1.750	1.250	.531	.750	.500	---	4.250	3.625	2.750	2.942	---	---	.562	3.250	.750	1.250	.500	.500	4.750	5.750	1.375	1.875	2.375	6.281
	1.375	1"-14 x 1.625	1 3/8"-12 x 1.625	1 1/4"-12 x 1.625	1 1/4"-12 x 2.500	1.999		.625		1.125																									1.625	2.125	2.625	6.531
	1.750	1 1/4"-12 x 2.000	1 3/4"-12 x 2.000	1 1/2"-12 x 2.000	1 1/2"-12 x 3.000	2.374		.750		1.500																									1.875	2.375	2.875	6.781
	2.000	1 1/2"-12 x 2.250	2"-12 x 2.250	1 3/4"-12 x 2.250	1 3/4"-12 x 3.500	2.624		.875		1.688																									2.000	2.500	3.000	6.906
4.000	1.000	3/4"-16 x 1.125	1"-14 x 1.125	7/8"-14 x 1.125	7/8"-14 x 1.875	1.499	2.562	.500	.250	.875	4.500	1/2	-8	.625	1.750	1.250	.531	.750	---	.500	4.250	4.375	2.750	3.469	2.969	2.500	.562	3.250	.750	1.250	.500	.500	5.500	6.500	1.375	1.875	2.375	6.281
	1.375	1"-14 x 1.625	1 3/8"-12 x 1.625	1 1/4"-12 x 1.625	1 1/4"-12 x 2.500	1.999	2.562	.625	.250	1.125									---	.500					2.969	2.500									1.625	2.125	2.625	6.531
	1.750	1 1/4"-12 x 2.000	1 3/4"-12 x 2.000	1 1/2"-12 x 2.000	1 1/2"-12 x 3.000	2.374	3.267	.750	.312	1.500									---	.500					3.734	3.000									1.875	2.375	2.875	6.781
	2.000	1 1/2"-12 x 2.250	2"-12 x 2.250	1 3/4"-12 x 2.250	1 3/4"-12 x 3.500	2.624	---	.875	---	1.688									.500	---					---	---									2.000	2.500	3.000	6.906
	2.500	1 7/8"-12 x 3.000	2 1/2"-12 x 3.000	2 1/4"-12 x 3.000	2 1/4"-12 x 4.500	3.124	---	1.000	---	2.062									.500	---					---	---									2.250	2.750	3.250	7.156
5.000	1.000	3/4"-16 x 1.125	1"-14 x 1.125	7/8"-14 x 1.125	7/8"-14 x 1.875	1.499	2.562	.500	.250	.875	5.500	1/2	-8	.625	1.750	1.250	.656	.938	---	.625	4.500	5.375	3.000	4.285	2.969	2.500	.812	3.125	1.000	1.562	.6875	.625	6.875	8.250	1.375	2.062	2.375	6.656
	1.375	1"-14 x 1.625	1 3/8"-12 x 1.625	1 1/4"-12 x 1.625	1 1/4"-12 x 2.500	1.999	2.562	.625	.250	1.125									---	.625					2.969	2.500									1.625	2.312	2.625	6.906
	1.750	1 1/4"-12 x 2.000	1 3/4"-12 x 2.000	1 1/2"-12 x 2.000	1 1/2"-12 x 3.000	2.374	3.267	.750	.312	1.500									---	.625					3.734	3.000									1.875	2.562	2.875	7.156
	2.000	1 1/2"-12 x 2.250	2"-12 x 2.250	1 3/4"-12 x 2.250	1 3/4"-12 x 3.500	2.624	3.812	.875	.312	1.688									---	.625					4.312	3.750									2.000	2.688	3.000	7.281
	2.500	1 7/8"-12 x 3.000	2 1/2"-12 x 3.000	2 1/4"-12 x 3.000	2 1/4"-12 x 4.500	3.124	3.812	1.000	.312	2.062									---	.625					4.312	3.750									2.250	2.938	3.250	7.531
	3.000	2 1/4"-12 x 3.500	3"-12 x 3.500	2 3/4"-12 x 3.500	2 3/4"-12 x 5.500	3.749	---	1.000	---	2.625									.625	---					---	---									2.250	2.938	3.250	7.531
	3.500	2 1/2"-12 x 3.500	3 1/2"-12 x 3.500	3 1/4"-12 x 3.500	3 1/4"-12 x 6.500	4.249	---	1.000	---	3.000									.625	---					---	---									2.250	2.938	3.250	7.531
6.000	1.375	1"-14 x 1.625	1 3/8"-12 x 1.625	1 1/4"-12 x 1.625	1 1/4"-12 x 2.500	1.999	3.267	.625	.312	1.125	6.500	3/4	-12	.625	2.000	1.500	.656	.938	---	.625	5.000	6.375	3.250	4.992	3.734	3.000	.812	3.625	1.000	1.562	.6875	.625	7.875	9.250	1.625	2.312	2.750	7.406
	1.750	1 1/4"-12 x 2.000	1 3/4"-12 x 2.000	1 1/2"-12 x 2.000	1 1/2"-12 x 3.000	2.374	3.267	.750	.312	1.500				.625					---	.625					3.734	3.000									1.875	2.562	3.000	7.656
	2.000	1 1/2"-12 x 2.250	2"-12 x 2.250	1 3/4"-12 x 2.250	1 3/4"-12 x 3.500	2.624	3.812	.875	.312	1.688				.625					---	.625					4.312	3.750									2.000	2.688	3.125	7.781
	2.500	1 7/8"-12 x 3.000	2 1/2"-12 x 3.000	2 1/4"-12 x 3.000	2 1/4"-12 x 4.500	3.124	3.812	1.000	.312	2.062				.625					---	.625					4.312	3.750									2.250	2.938	3.375	8.031
	3.000	2 1/4"-12 x 3.500	3"-12 x 3.500	2 3/4"-12 x 3.500	2 3/4"-12 x 5.500	3.749	4.700	1.000	.375	2.625				.625					---	.625					5.562	4.500									2.250	2.938	3.375	8.031
	3.500	2 1/2"-12 x 3.500	3 1/2"-12 x 3.500	3 1/4"-12 x 3.500	3 1/4"-12 x 6.500	4.249	5.200	1.000	.375	3.000				.625					---	.625					6.062	5.000									2.250	2.938	3.375	8.031
	4.000	3"-12 x 4.000	4"-12 x 4.000	3 3/4"-12 x 4.000	3 3/4"-12 x 7.500	4.749	---	1.000	---	3.375				.750					.625	---					---	---									2.250	2.938	3.375	8.031

NEVA DESIGN

FILE: 4.15_LH15S2.dwg REV: 02/09/2010

27650 Groesbeck Hwy • Roseville, MI 48066-2759 • Phone 586.775.7211 • Fax 586.775.4545 • Toll Free 800.526.7968 • e-mail: sales@peninsularcylinders.com • www.peninsularcylinders.com

SIDE TAPPED

Low Pressure Steel Hydraulic Cylinder

Peninsular Mounting Style: **LH 16**

BORE	WORKING P.S.I.	RATED P.S.I.
1.50	1500	2500
2.00	1500	2500
2.50	1000	1500
3.25	1000	1500
4.00	1000	1500
5.00	800	1200
6.00	800	1200

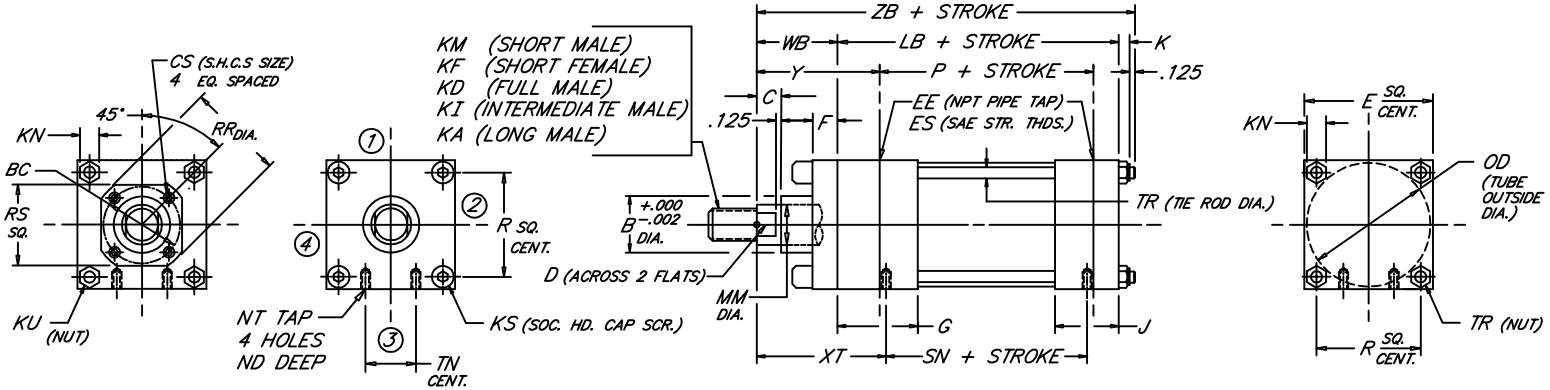

BORE	ROD MM	ROD THREAD X LENGTH KM & KF	KD	KI	KA	B	BC	C	CS	D	E	NPT EE	SAE ES	F	G	J	K	KN	KS	KU	LB	ND	NT	OD	P	R	RR	RS	SN	TN	TR	WB	XT	Y	ZB
1.500	.625	7/16"-20 x .750	5/8"-18 x .750	1/2"-20 x .750	1/2"-20 x 1.125	1.124	---	.375	---	.500	2.000	3/8	-6	.375	1.500	1.000	.344	.500	.312	---	3.625	.375	1/4"-20	1.750	2.335	1.478	---	---	2.250	.625	.312	1.000	1.938	1.875	5.094
	1.000	3/4"-16 x 1.125	1"-14 x 1.125	7/8"-14 x 1.125	7/8"-14 x 1.875	1.499		.500		.875												.281										1.375	2.312	2.250	5.469
2.000	.625	7/16"-20 x .750	5/8"-18 x .750	1/2"-20 x .750	1/2"-20 x 1.125	1.124	---	.375	---	.500	2.500	3/8	-6	.375	1.500	1.000	.406	.562	.375	---	3.625	.344	5/16"-18	2.375	2.335	1.966	---	---	2.250	.875	.375	1.000	1.938	1.875	5.156
	1.000	3/4"-16 x 1.125	1"-14 x 1.125	7/8"-14 x 1.125	7/8"-14 x 1.875	1.499		.500		.875																						1.375	2.312	2.250	5.531
	1.375	1"-14 x 1.625	1 3/8"-12 x 1.625	1 1/4"-12 x 1.625	1 1/4"-12 x 2.500	1.999		.625		1.125																						1.625	2.562	2.500	5.781
2.500	.625	7/16"-20 x .750	5/8"-18 x .750	1/2"-20 x .750	1/2"-20 x 1.125	1.124	---	.375	---	.500	3.000	3/8	-6	.375	1.500	1.000	.406	.562	.375	---	3.750	.438	3/8"-16	2.875	2.460	2.320	---	---	2.375	1.250	.375	1.000	1.938	1.875	5.281
	1.000	3/4"-16 x 1.125	1"-14 x 1.125	7/8"-14 x 1.125	7/8"-14 x 1.875	1.499		.500		.875																						1.375	2.312	2.250	5.656
	1.375	1"-14 x 1.625	1 3/8"-12 x 1.625	1 1/4"-12 x 1.625	1 1/4"-12 x 2.500	1.999		.625		1.125																						1.625	2.562	2.500	5.906
	1.750	1 1/4"-12 x 2.000	1 3/4"-12 x 2.000	1 1/2"-12 x 2.000	1 1/2"-12 x 3.000	2.374		.750		1.500																						1.875	2.812	2.750	6.156
3.250	1.000	3/4"-16 x 1.125	1"-14 x 1.125	7/8"-14 x 1.125	7/8"-14 x 1.875	1.499	---	.500	---	.875	3.750	1/2	-8	.625	1.750	1.250	.531	.750	.500	---	4.250	.500	1/2"-13	3.625	2.750	2.942	---	---	2.625	1.500	.500	1.375	2.438	2.375	6.281
	1.375	1"-14 x 1.625	1 3/8"-12 x 1.625	1 1/4"-12 x 1.625	1 1/4"-12 x 2.500	1.999		.625		1.125																						1.625	2.688	2.625	6.531
	1.750	1 1/4"-12 x 2.000	1 3/4"-12 x 2.000	1 1/2"-12 x 2.000	1 1/2"-12 x 3.000	2.374		.750		1.500																						1.875	2.938	2.875	6.781
	2.000	1 1/2"-12 x 2.250	2"-12 x 2.250	1 3/4"-12 x 2.250	1 3/4"-12 x 3.500	2.624		.875		1.688																						2.000	3.062	3.000	6.906
4.000	1.000	3/4"-16 x 1.125	1"-14 x 1.125	7/8"-14 x 1.125	7/8"-14 x 1.875	1.499	2.562	.500	.250	.875	4.500	1/2	-8	.625	1.750	1.250	.531	.750	---	.500	4.250	.625	1/2"-13	4.375	2.750	3.469	2.969	2.500	2.625	2.062	.500	1.375	2.438	2.375	6.281
	1.375	1"-14 x 1.625	1 3/8"-12 x 1.625	1 1/4"-12 x 1.625	1 1/4"-12 x 2.500	1.999	2.562	.625	.250	1.125									---	.500							2.969	2.500				1.625	2.688	2.625	6.531
	1.750	1 1/4"-12 x 2.000	1 3/4"-12 x 2.000	1 1/2"-12 x 2.000	1 1/2"-12 x 3.000	2.374	3.267	.750	.312	1.500									---	.500							3.734	3.000				1.875	2.938	2.875	6.781
	2.000	1 1/2"-12 x 2.250	2"-12 x 2.250	1 3/4"-12 x 2.250	1 3/4"-12 x 3.500	2.624	---	.875	---	1.688									.500	---							---	---				2.000	3.062	3.000	6.906
	2.500	1 7/8"-12 x 3.000	2 1/2"-12 x 3.000	2 1/4"-12 x 3.000	2 1/4"-12 x 4.500	3.124	---	1.000	---	2.062									.500	---							---	---				2.250	3.312	3.250	7.156
5.000	1.000	3/4"-16 x 1.125	1"-14 x 1.125	7/8"-14 x 1.125	7/8"-14 x 1.875	1.499	2.562	.500	.250	.875	5.500	1/2	-8	.625	1.750	1.250	.656	.938	---	.625	4.500	.750	5/8"-11	5.375	3.000	4.285	2.969	2.500	2.875	2.688	.625	1.375	2.438	2.375	6.656
	1.375	1"-14 x 1.625	1 3/8"-12 x 1.625	1 1/4"-12 x 1.625	1 1/4"-12 x 2.500	1.999	2.562	.625	.250	1.125									---	.625							2.969	2.500				1.625	2.688	2.625	6.906
	1.750	1 1/4"-12 x 2.000	1 3/4"-12 x 2.000	1 1/2"-12 x 2.000	1 1/2"-12 x 3.000	2.374	3.267	.750	.312	1.500									---	.625							3.734	3.000				1.875	2.938	2.875	7.156
	2.000	1 1/2"-12 x 2.250	2"-12 x 2.250	1 3/4"-12 x 2.250	1 3/4"-12 x 3.500	2.624	3.812	.875	.312	1.688									---	.625							4.312	3.750				2.000	3.062	3.000	7.281
	2.500	1 7/8"-12 x 3.000	2 1/2"-12 x 3.000	2 1/4"-12 x 3.000	2 1/4"-12 x 4.500	3.124	3.812	1.000	.312	2.062									---	.625							4.312	3.750				2.250	3.312	3.250	7.531
	3.000	2 1/4"-12 x 3.500	3"-12 x 3.500	2 3/4"-12 x 3.500	2 3/4"-12 x 5.500	3.749	---	1.000	---	2.625									.625	---							---	---				2.250	3.312	3.250	7.531
	3.500	2 1/2"-12 x 3.500	3 1/2"-12 x 3.500	3 1/4"-12 x 3.500	3 1/4"-12 x 6.500	4.249	---	1.000	---	3.000									.625	---							---	---				2.250	3.312	3.250	7.531
6.000	1.375	1"-14 x 1.625	1 3/8"-12 x 1.625	1 1/4"-12 x 1.625	1 1/4"-12 x 2.500	1.999	3.267	.625	.312	1.125	6.500	3/4	-12	.625	2.000	1.500	.656	.938	---	.625	5.000	.875	3/4"-10	6.375	3.250	4.992	3.734	3.000	3.125	3.250	.625	1.625	2.812	2.750	7.406
	1.750	1 1/4"-12 x 2.000	1 3/4"-12 x 2.000	1 1/2"-12 x 2.000	1 1/2"-12 x 3.000	2.374	3.267	.750	.312	1.500				.625					---	.625							3.734	3.000				1.875	3.062	3.000	7.656
	2.000	1 1/2"-12 x 2.250	2"-12 x 2.250	1 3/4"-12 x 2.250	1 3/4"-12 x 3.500	2.624	3.812	.875	.312	1.688				.625					---	.625							4.312	3.750				2.000	3.188	3.125	7.781
	2.500	1 7/8"-12 x 3.000	2 1/2"-12 x 3.000	2 1/4"-12 x 3.000	2 1/4"-12 x 4.500	3.124	3.812	1.000	.312	2.062				.625					---	.625							4.312	3.750				2.250	3.438	3.375	8.031
	3.000	2 1/4"-12 x 3.500	3"-12 x 3.500	2 3/4"-12 x 3.500	2 3/4"-12 x 5.500	3.749	4.700	1.000	.375	2.625				.625					---	.625							5.562	4.500				2.250	3.438	3.375	8.031
	3.500	2 1/2"-12 x 3.500	3 1/2"-12 x 3.500	3 1/4"-12 x 3.500	3 1/4"-12 x 6.500	4.249	5.200	1.000	.375	3.000				.625					---	.625							6.062	5.000				2.250	3.438	3.375	8.031
	4.000	3"-12 x 4.000	4"-12 x 4.000	3 3/4"-12 x 4.000	3 3/4"-12 x 7.500	4.749	---	1.000	---	3.375				.750					.625	---							---	---				2.250	3.438	3.375	8.031
BORE	MM	KM & KF	KD	KI	KA	B	BC	C	CS	D	E	EE	ES	F	G	J	K	KN	KS	KU	LB	ND	NT	OD	P	R	RR	RS	SN	TN	TR	WB	XT	Y	ZB

NEWA DESIGN

4.16

FILE: 4.16_LH16S2.dwg REV: 02/09/2010

27650 Groesbeck Hwy • Roseville, MI 48066-2759 • Phone 586.775.7211 • Fax 586.775.4545 • Toll Free 800.526.7968 • e-mail: sales@peninsularcylinders.com • www.peninsularcylinders.com

HEAD SQUARE FLANGE

Peninsular Mounting Style: **LH 17**

Low Pressure Steel Hydraulic Cylinder

BORE	WORKING P.S.I.	RATED P.S.I.
1.50	1500	2500
2.00	1500	2500
2.50	1000	1500
3.25	1000	1500
4.00	1000	1500
5.00	800	1200
6.00	800	1200

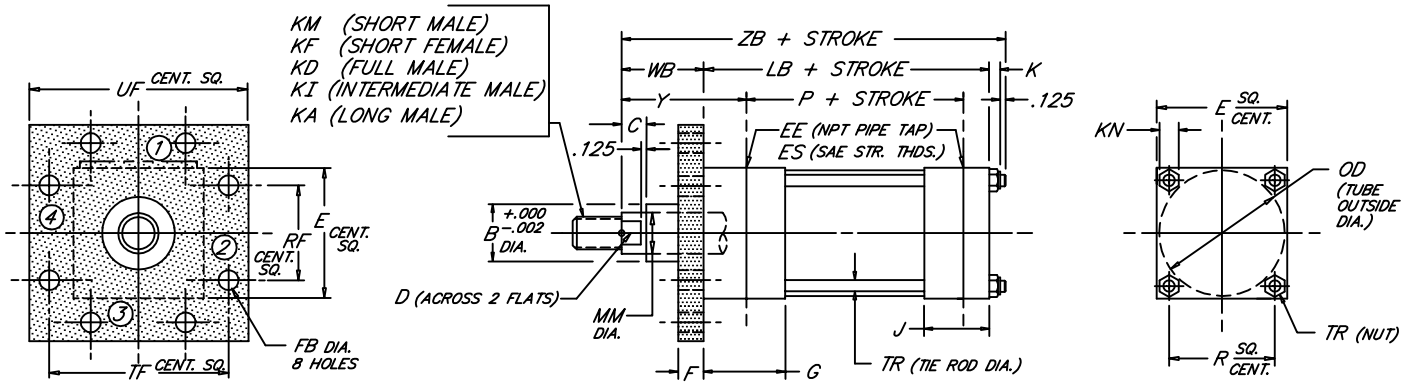

BORE	ROD MM	ROD THREAD X LENGTH KM & KF	KD	KI	KA	B	C	D	E	NPT/SAE EE	ES	F	FB	G	J	K	KN	LB	OD	P	R	RF	TF	TR	UF	WB	Y	ZB
1.500	.625	7/16"-20 x .750	5/8"-18 x .750	1/2"-20 x .750	1/2"-20 x 1.125	1.124	.375	.500	2.000	3/8	-6	.375	.312	1.500	1.000	.344	.500	3.625	1.750	2.335	1.478	1.428	2.750	.312	3.375	1.000	1.875	5.094
	1.000	3/4"-16 x 1.125	1"-14 x 1.125	7/8"-14 x 1.125	7/8"-14 x 1.875	1.499	.500	.875																		1.375	2.250	5.469
2.000	.625	7/16"-20 x .750	5/8"-18 x .750	1/2"-20 x .750	1/2"-20 x 1.125	1.124	.375	.500	2.500	3/8	-6	.375	.375	1.500	1.000	.406	.562	3.625	2.375	2.335	1.966	1.838	3.375	.375	4.125	1.000	1.875	5.156
	1.000	3/4"-16 x 1.125	1"-14 x 1.125	7/8"-14 x 1.125	7/8"-14 x 1.875	1.499	.500	.875																		1.375	2.250	5.531
	1.375	1"-14 x 1.625	1 3/8"-12 x 1.625	1 1/4"-12 x 1.625	1 1/4"-12 x 2.500	1.999	.625	1.125																		1.625	2.500	5.781
2.500	.625	7/16"-20 x .750	5/8"-18 x .750	1/2"-20 x .750	1/2"-20 x 1.125	1.124	.375	.500	3.000	3/8	-6	.375	.375	1.500	1.000	.406	.562	3.750	2.875	2.460	2.320	2.192	3.875	.375	4.625	1.000	1.875	5.281
	1.000	3/4"-16 x 1.125	1"-14 x 1.125	7/8"-14 x 1.125	7/8"-14 x 1.875	1.499	.500	.875																		1.375	2.250	5.656
	1.375	1"-14 x 1.625	1 3/8"-12 x 1.625	1 1/4"-12 x 1.625	1 1/4"-12 x 2.500	1.999	.625	1.125																		1.625	2.500	5.906
	1.750	1 1/4"-12 x 2.000	1 3/4"-12 x 2.000	1 1/2"-12 x 2.000	1 1/2"-12 x 3.000	2.374	.750	1.500																		1.875	2.750	6.156
3.250	1.000	3/4"-16 x 1.125	1"-14 x 1.125	7/8"-14 x 1.125	7/8"-14 x 1.875	1.499	.500	.875	3.750	1/2	-8	.625	.438	1.750	1.250	.531	.750	4.250	3.625	2.750	2.942	2.758	4.688	.500	5.500	1.375	2.375	6.281
	1.375	1"-14 x 1.625	1 3/8"-12 x 1.625	1 1/4"-12 x 1.625	1 1/4"-12 x 2.500	1.999	.625	1.125																		1.625	2.625	6.531
	1.750	1 1/4"-12 x 2.000	1 3/4"-12 x 2.000	1 1/2"-12 x 2.000	1 1/2"-12 x 3.000	2.374	.750	1.500																		1.875	2.875	6.781
	2.000	1 1/2"-12 x 2.250	2"-12 x 2.250	1 3/4"-12 x 2.250	1 3/4"-12 x 3.500	2.624	.875	1.688																		2.000	3.000	6.906
4.000	1.000	3/4"-16 x 1.125	1"-14 x 1.125	7/8"-14 x 1.125	7/8"-14 x 1.875	1.499	.500	.875	4.500	1/2	-8	.625	.438	1.750	1.250	.531	.750	4.250	4.375	2.750	3.469	3.323	5.438	.500	6.250	1.375	2.375	6.281
	1.375	1"-14 x 1.625	1 3/8"-12 x 1.625	1 1/4"-12 x 1.625	1 1/4"-12 x 2.500	1.999	.625	1.125																		1.625	2.625	6.531
	1.750	1 1/4"-12 x 2.000	1 3/4"-12 x 2.000	1 1/2"-12 x 2.000	1 1/2"-12 x 3.000	2.374	.750	1.500																		1.875	2.875	6.781
	2.000	1 1/2"-12 x 2.250	2"-12 x 2.250	1 3/4"-12 x 2.250	1 3/4"-12 x 3.500	2.624	.875	1.688																		2.000	3.000	6.906
	2.500	1 7/8"-12 x 3.000	2 1/2"-12 x 3.000	2 1/4"-12 x 3.000	2 1/4"-12 x 4.500	3.124	1.000	2.062																		2.250	3.250	7.156
5.000	1.000	3/4"-16 x 1.125	1"-14 x 1.125	7/8"-14 x 1.125	7/8"-14 x 1.875	1.499	.500	.875	5.500	1/2	-8	.625	.562	1.750	1.250	.656	.938	4.500	5.375	3.000	4.285	4.101	6.625	.625	7.625	1.375	2.375	6.656
	1.375	1"-14 x 1.625	1 3/8"-12 x 1.625	1 1/4"-12 x 1.625	1 1/4"-12 x 2.500	1.999	.625	1.125																		1.625	2.625	6.906
	1.750	1 1/4"-12 x 2.000	1 3/4"-12 x 2.000	1 1/2"-12 x 2.000	1 1/2"-12 x 3.000	2.374	.750	1.500																		1.875	2.875	7.156
	2.000	1 1/2"-12 x 2.250	2"-12 x 2.250	1 3/4"-12 x 2.250	1 3/4"-12 x 3.500	2.624	.875	1.688																		2.000	3.000	7.281
	2.500	1 7/8"-12 x 3.000	2 1/2"-12 x 3.000	2 1/4"-12 x 3.000	2 1/4"-12 x 4.500	3.124	1.000	2.062																		2.250	3.250	7.531
	3.000	2 1/4"-12 x 3.500	3"-12 x 3.500	2 3/4"-12 x 3.500	2 3/4"-12 x 5.500	3.749	1.000	2.625																		2.250	3.250	7.531
	3.500	2 1/2"-12 x 3.500	3 1/2"-12 x 3.500	3 1/4"-12 x 3.500	3 1/4"-12 x 6.500	4.249	1.000	3.000																		2.250	3.250	7.531
6.000	1.375	1"-14 x 1.625	1 3/8"-12 x 1.625	1 1/4"-12 x 1.625	1 1/4"-12 x 2.500	1.999	.625	1.125	6.500	3/4	-12	.750	.562	2.000	1.500	.656	.938	5.000	6.375	3.250	4.992	4.879	7.625	.625	8.625	1.625	2.750	7.406
	1.750	1 1/4"-12 x 2.000	1 3/4"-12 x 2.000	1 1/2"-12 x 2.000	1 1/2"-12 x 3.000	2.374	.750	1.500																		1.875	3.000	7.656
	2.000	1 1/2"-12 x 2.250	2"-12 x 2.250	1 3/4"-12 x 2.250	1 3/4"-12 x 3.500	2.624	.875	1.688																		2.000	3.125	7.781
	2.500	1 7/8"-12 x 3.000	2 1/2"-12 x 3.000	2 1/4"-12 x 3.000	2 1/4"-12 x 4.500	3.124	1.000	2.062																		2.250	3.375	8.031
	3.000	2 1/4"-12 x 3.500	3"-12 x 3.500	2 3/4"-12 x 3.500	2 3/4"-12 x 5.500	3.749	1.000	2.625																		2.250	3.375	8.031
	3.500	2 1/2"-12 x 3.500	3 1/2"-12 x 3.500	3 1/4"-12 x 3.500	3 1/4"-12 x 6.500	4.249	1.000	3.000																		2.250	3.375	8.031
	4.000	3"-12 x 4.000	4"-12 x 4.000	3 3/4"-12 x 4.000	3 3/4"-12 x 7.500	4.749	1.000	3.375																		2.250	3.375	8.031
BORE	MM	KM & KF	KD	KI	KA	B	C	D	E	EE	ES	F	FB	G	J	K	KN	LB	OD	P	R	RF	TF	TR	UF	WB	Y	ZB

NEVA DESIGN

FILE: 4.17_LH17s2.dwg REV: 02/09/2010

27650 Groesbeck Hwy • Roseville, MI 48066-2759 • Phone 586.775.7211 • Fax 586.775.4545 • Toll Free 800.526.7968 • e-mail: sales@peninsularcylinders.com • www.peninsularcylinders.com

CAP SQUARE FLANGE

Peninsular Mounting Style: **LH 18**

Low Pressure Steel Hydraulic Cylinder

BORE	WORKING P.S.I.	RATED P.S.I.
1.50	1500	2500
2.00	1500	2500
2.50	1000	1500
3.25	1000	1500
4.00	1000	1500
5.00	800	1200
6.00	800	1200

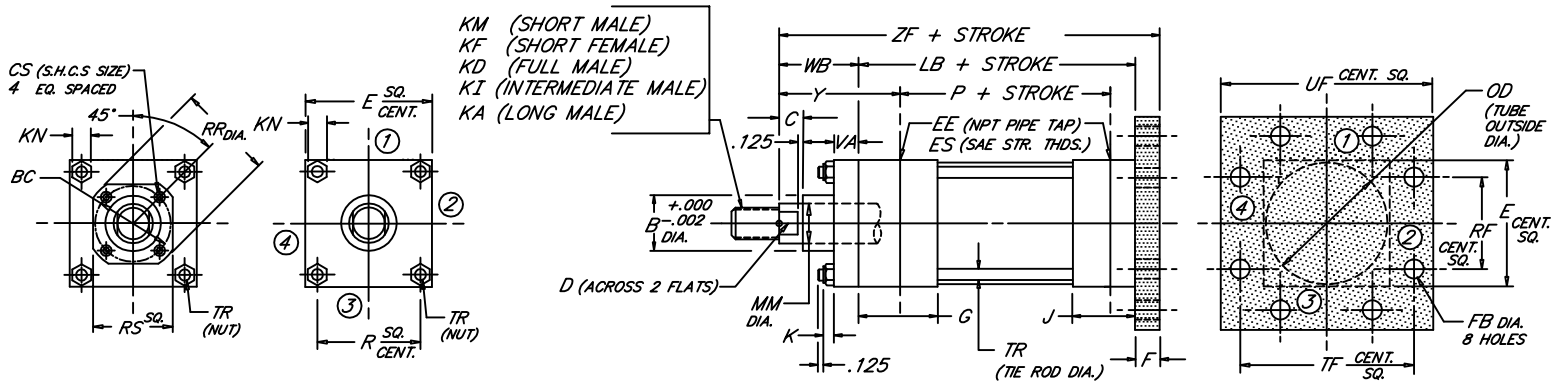

BORE	MM	ROD KM & KF	ROD THREAD X LENGTH KD	KI	KA	B	BC	C	CS	D	E	EE	NPT/SAE ES	F	FB	G	J	K	KN	LB	OD	P	R	RF	RR	RS	TF	TR	UF	VA	WB	Y	ZF
1.500	.625	7/16"-20 x .750	5/8"-18 x .750	1/2"-20 x .750	1/2"-20 x 1.125	1.124	---	.375	---	.500	2.000	3/8	-6	.375	.312	1.500	1.000	.344	.500	3.625	1.750	2.335	1.478	1.428	---	---	2.750	.312	3.375	.375	1.000	1.875	5.000
	1.000	3/4"-16 x 1.125	1"-14 x 1.125	7/8"-14 x 1.125	7/8"-14 x 1.875	1.499		.500		.875																					1.375	2.250	5.375
2.000	.625	7/16"-20 x .750	5/8"-18 x .750	1/2"-20 x .750	1/2"-20 x 1.125	1.124	---	.375	---	.500	2.500	3/8	-6	.375	.375	1.500	1.000	.406	.562	3.625	2.375	2.335	1.966	1.838	---	---	3.375	.375	4.125	.375	1.000	1.875	5.000
	1.000	3/4"-16 x 1.125	1"-14 x 1.125	7/8"-14 x 1.125	7/8"-14 x 1.875	1.499		.500		.875																					1.375	2.250	5.375
	1.375	1"-14 x 1.625	1 3/8"-12 x 1.625	1 1/4"-12 x 1.625	1 1/4"-12 x 2.500	1.999		.625		1.125																					1.625	2.500	5.625
2.500	.625	7/16"-20 x .750	5/8"-18 x .750	1/2"-20 x .750	1/2"-20 x 1.125	1.124	---	.375	---	.500	3.000	3/8	-6	.375	.375	1.500	1.000	.406	.562	3.750	2.875	2.460	2.320	2.192	---	---	3.875	.375	4.625	.375	1.000	1.875	5.125
	1.000	3/4"-16 x 1.125	1"-14 x 1.125	7/8"-14 x 1.125	7/8"-14 x 1.875	1.499		.500		.875																					1.375	2.250	5.500
	1.375	1"-14 x 1.625	1 3/8"-12 x 1.625	1 1/4"-12 x 1.625	1 1/4"-12 x 2.500	1.999		.625		1.125																					1.625	2.500	5.750
	1.750	1 1/4"-12 x 2.000	1 3/4"-12 x 2.000	1 1/2"-12 x 2.000	1 1/2"-12 x 3.000	2.374		.750		1.500																					1.875	2.750	6.000
3.250	1.000	3/4"-16 x 1.125	1"-14 x 1.125	7/8"-14 x 1.125	7/8"-14 x 1.875	1.499	---	.500	---	.875	3.750	1/2	-8	.625	.438	1.750	1.250	.531	.750	4.250	3.625	2.750	2.942	2.758	---	---	4.688	.500	5.500	.625	1.375	2.375	6.250
	1.375	1"-14 x 1.625	1 3/8"-12 x 1.625	1 1/4"-12 x 1.625	1 1/4"-12 x 2.500	1.999		.625		1.125																					1.625	2.625	6.500
	1.750	1 1/4"-12 x 2.000	1 3/4"-12 x 2.000	1 1/2"-12 x 2.000	1 1/2"-12 x 3.000	2.374		.750		1.500																					1.875	2.875	6.750
	2.000	1 1/2"-12 x 2.250	2"-12 x 2.250	1 3/4"-12 x 2.250	1 3/4"-12 x 3.500	2.624		.875		1.688																					2.000	3.000	6.875
4.000	1.000	3/4"-16 x 1.125	1"-14 x 1.125	7/8"-14 x 1.125	7/8"-14 x 1.875	1.499	2.562	.500	.250	.875	4.500	1/2	-8	.625	.438	1.750	1.250	.531	.750	4.250	4.375	2.750	3.469	3.323	2.969	2.500	5.438	.500	6.250	.625	1.375	2.375	6.250
	1.375	1"-14 x 1.625	1 3/8"-12 x 1.625	1 1/4"-12 x 1.625	1 1/4"-12 x 2.500	1.999	2.562	.625	.250	1.125															2.969	2.500					1.625	2.625	6.500
	1.750	1 1/4"-12 x 2.000	1 3/4"-12 x 2.000	1 1/2"-12 x 2.000	1 1/2"-12 x 3.000	2.374	3.267	.750	.312	1.500															3.734	3.000					1.875	2.875	6.750
	2.000	1 1/2"-12 x 2.250	2"-12 x 2.250	1 3/4"-12 x 2.250	1 3/4"-12 x 3.500	2.624	---	.875	---	1.688															---	---					2.000	3.000	6.875
	2.500	1 7/8"-12 x 3.000	2 1/2"-12 x 3.000	2 1/4"-12 x 3.000	2 1/4"-12 x 4.500	3.124	---	1.000	---	2.062															---	---					2.250	3.250	7.125
5.000	1.000	3/4"-16 x 1.125	1"-14 x 1.125	7/8"-14 x 1.125	7/8"-14 x 1.875	1.499	2.562	.500	.250	.875	5.500	1/2	-8	.625	.562	1.750	1.250	.656	.938	4.500	5.375	3.000	4.285	4.101	2.969	2.500	6.625	.625	7.625	.625	1.375	2.375	6.500
	1.375	1"-14 x 1.625	1 3/8"-12 x 1.625	1 1/4"-12 x 1.625	1 1/4"-12 x 2.500	1.999	2.562	.625	.250	1.125															2.969	2.500					1.625	2.625	6.750
	1.750	1 1/4"-12 x 2.000	1 3/4"-12 x 2.000	1 1/2"-12 x 2.000	1 1/2"-12 x 3.000	2.374	3.267	.750	.312	1.500															3.734	3.000					1.875	2.875	7.000
	2.000	1 1/2"-12 x 2.250	2"-12 x 2.250	1 3/4"-12 x 2.250	1 3/4"-12 x 3.500	2.624	3.812	.875	.312	1.688															4.312	3.750					2.000	3.000	7.125
	2.500	1 7/8"-12 x 3.000	2 1/2"-12 x 3.000	2 1/4"-12 x 3.000	2 1/4"-12 x 4.500	3.124	3.812	1.000	.312	2.062															4.312	3.750					2.250	3.250	7.375
	3.000	2 1/4"-12 x 3.500	3"-12 x 3.500	2 3/4"-12 x 3.500	2 3/4"-12 x 5.500	3.749	---	1.000	---	2.625															---	---					2.250	3.250	7.375
	3.500	2 1/2"-12 x 3.500	3 1/2"-12 x 3.500	3 1/4"-12 x 3.500	3 1/4"-12 x 6.500	4.249	---	1.000	---	3.000															---	---					2.250	3.250	7.375
6.000	1.375	1"-14 x 1.625	1 3/8"-12 x 1.625	1 1/4"-12 x 1.625	1 1/4"-12 x 2.500	1.999	3.267	.625	.312	1.125	6.500	3/4	-12	.750	.562	2.000	1.500	.656	.938	5.000	6.375	3.250	4.992	4.879	3.734	3.000	7.625	.625	8.625	.625	1.625	2.750	7.375
	1.750	1 1/4"-12 x 2.000	1 3/4"-12 x 2.000	1 1/2"-12 x 2.000	1 1/2"-12 x 3.000	2.374	3.267	.750	.312	1.500															3.734	3.000				.625	1.875	3.000	7.625
	2.000	1 1/2"-12 x 2.250	2"-12 x 2.250	1 3/4"-12 x 2.250	1 3/4"-12 x 3.500	2.624	3.812	.875	.312	1.688															4.312	3.750				.625	2.000	3.125	7.750
	2.500	1 7/8"-12 x 3.000	2 1/2"-12 x 3.000	2 1/4"-12 x 3.000	2 1/4"-12 x 4.500	3.124	3.812	1.000	.312	2.062															4.312	3.750				.625	2.250	3.375	8.000
	3.000	2 1/4"-12 x 3.500	3"-12 x 3.500	2 3/4"-12 x 3.500	2 3/4"-12 x 5.500	3.749	4.700	1.000	.375	2.625															5.562	4.500				.625	2.250	3.375	8.000
	3.500	2 1/2"-12 x 3.500	3 1/2"-12 x 3.500	3 1/4"-12 x 3.500	3 1/4"-12 x 6.500	4.249	5.200	1.000	.375	3.000															6.062	5.000				.625	2.250	3.375	8.000
	4.000	3"-12 x 4.000	4"-12 x 4.000	3 3/4"-12 x 4.000	3 3/4"-12 x 7.500	4.749	---	1.000	---	3.375															---	---				.750	2.250	3.375	8.000
BORE	MM	KM & KF	KD	KI	KA	B	BC	C	CS	D	E	EE	ES	F	FB	G	J	K	KN	LB	OD	P	R	RF	RR	RS	TF	TR	UF	VA	WB	Y	ZF

NEVA DESIGN

FILE: 4.18_LH18S2.dwg REV: 02/09/2010

27650 Groesbeck Hwy • Roseville, MI 48066-2759 • Phone 586.775.7211 • Fax 586.775.4545 • Toll Free 800.526.7968 • e-mail: sales@peninsularcylinders.com • www.peninsularcylinders.com

CAP DETACHABLE EYE

Low Pressure Steel Hydraulic Cylinder

BORE	1.50	2.00	2.50	3.25	4.00	5.00	6.00
WORKING P.S.I.	1500	1500	1000	1000	1000	800	800
RATED P.S.I.	2500	2500	1500	1500	1500	1200	1200

Peninsular Mounting Style: **LH 21**

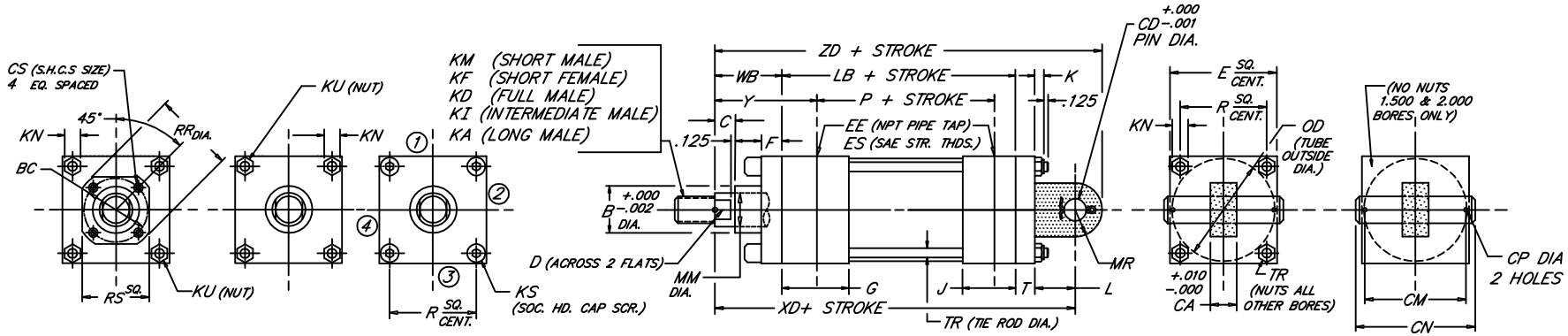

BORE	ROD MM	ROD THREAD X LENGTH KM & KF	KD	KI	KA	B	BC	C	CA	CD	CM	CN	CP	CS	D	E	NPT/SAE EE	ES	F	G	J	K	KN	KS	KU	L	LB	MR	OD	P	R	RR	RS	T	TR	WB	XD	Y	ZD
1.500	.625	7/16"-20 x .750	5/8"-18 x .750	1/2"-20 x .750	1/2"-20 x 1.125	1.124	---	.375	.735	.500	1.938	2.281	.106	---	.500	2.000	3/8	-6	.375	1.500	1.000	.344	.500	---	.312	.750	3.625	.625	1.750	2.335	1.478	---	---	.375	.312	1.000	5.750	1.875	6.375
	1.000	3/4"-16 x 1.125	1"-14 x 1.125	7/8"-14 x 1.125	7/8"-14 x 1.875	1.499		.500							.875																					1.375	6.125	2.250	6.750
2.000	.625	7/16"-20 x .750	5/8"-18 x .750	1/2"-20 x .750	1/2"-20 x 1.125	1.124	---	.375	.735	.500	1.938	2.281	.106	---	.500	2.500	3/8	-6	.375	1.500	1.000	.406	.562	---	.375	.750	3.625	.625	2.375	2.335	1.966	---	---	.375	.375	1.000	5.750	1.875	6.375
	1.000	3/4"-16 x 1.125	1"-14 x 1.125	7/8"-14 x 1.125	7/8"-14 x 1.875	1.499		.500							.875																					1.375	6.125	2.250	6.750
	1.375	1"-14 x 1.625	1 3/8"-12 x 1.625	1 1/4"-12 x 1.625	1 1/4"-12 x 2.500	1.999		.625							1.125																					1.625	6.375	2.500	7.000
2.500	.625	7/16"-20 x .750	5/8"-18 x .750	1/2"-20 x .750	1/2"-20 x 1.125	1.124	---	.375	.735	.500	1.938	2.281	.106	---	.500	3.000	3/8	-6	.375	1.500	1.000	.406	.562	.375	---	.750	3.750	.625	2.875	2.460	2.320	---	---	.375	.375	1.000	5.875	1.875	6.500
	1.000	3/4"-16 x 1.125	1"-14 x 1.125	7/8"-14 x 1.125	7/8"-14 x 1.875	1.499		.500							.875																					1.375	6.250	2.250	6.875
	1.375	1"-14 x 1.625	1 3/8"-12 x 1.625	1 1/4"-12 x 1.625	1 1/4"-12 x 2.500	1.999		.625							1.125																					1.625	6.500	2.500	7.125
	1.750	1 1/4"-12 x 2.000	1 3/4"-12 x 2.000	1 1/2"-12 x 2.000	1 1/2"-12 x 3.000	2.374		.750							1.500																					1.875	6.750	2.750	7.375
3.250	1.000	3/4"-16 x 1.125	1"-14 x 1.125	7/8"-14 x 1.125	7/8"-14 x 1.875	1.499	---	.500	1.235	.750	2.719	3.094	.140	---	.875	3.750	1/2	-8	.625	1.750	1.250	.531	.750	.500	---	1.250	4.250	.875	3.625	2.750	2.942	---	---	.625	.500	1.375	7.500	2.375	8.375
	1.375	1"-14 x 1.625	1 3/8"-12 x 1.625	1 1/4"-12 x 1.625	1 1/4"-12 x 2.500	1.999		.625							1.125																					1.625	7.750	2.625	8.625
	1.750	1 1/4"-12 x 2.000	1 3/4"-12 x 2.000	1 1/2"-12 x 2.000	1 1/2"-12 x 3.000	2.374		.750							1.500																					1.875	8.000	2.875	8.875
	2.000	1 1/2"-12 x 2.250	2"-12 x 2.250	1 3/4"-12 x 2.250	1 3/4"-12 x 3.500	2.624		.875							1.688																					2.000	8.125	3.000	9.000
4.000	1.000	3/4"-16 x 1.125	1"-14 x 1.125	7/8"-14 x 1.125	7/8"-14 x 1.875	1.499	2.562	.500	1.235	.750	2.719	3.094	.140	.250	.875	4.500	1/2	-8	.625	1.750	1.250	.531	.750	---	.500	1.250	4.250	.875	4.375	2.750	3.469	2.969	2.500	.625	.500	1.375	7.500	2.375	8.375
	1.375	1"-14 x 1.625	1 3/8"-12 x 1.625	1 1/4"-12 x 1.625	1 1/4"-12 x 2.500	1.999	2.562	.625						.250	1.125									---	.500							2.969	2.500			1.625	7.750	2.625	8.625
	1.750	1 1/4"-12 x 2.000	1 3/4"-12 x 2.000	1 1/2"-12 x 2.000	1 1/2"-12 x 3.000	2.374	3.267	.750						.312	1.500									---	.500							3.734	3.000			1.875	8.000	2.875	8.875
	2.000	1 1/2"-12 x 2.250	2"-12 x 2.250	1 3/4"-12 x 2.250	1 3/4"-12 x 3.500	2.624	---	.875						---	1.688									.500	---							---	---			2.000	8.125	3.000	9.000
	2.500	1 7/8"-12 x 3.000	2 1/2"-12 x 3.000	2 1/4"-12 x 3.000	2 1/4"-12 x 4.500	3.124	---	1.000						---	2.062									.500	---							---	---			2.250	8.375	3.250	9.250
5.000	1.000	3/4"-16 x 1.125	1"-14 x 1.125	7/8"-14 x 1.125	7/8"-14 x 1.875	1.499	2.562	.500	1.235	.750	2.719	3.094	.140	.250	.875	5.500	1/2	-8	.625	1.750	1.250	.656	.938	---	.625	1.250	4.500	.875	5.375	3.000	4.285	2.969	2.500	.625	.625	1.375	7.750	2.375	8.625
	1.375	1"-14 x 1.625	1 3/8"-12 x 1.625	1 1/4"-12 x 1.625	1 1/4"-12 x 2.500	1.999	2.562	.625						.250	1.125									---	.625							2.969	2.500			1.625	8.000	2.625	8.875
	1.750	1 1/4"-12 x 2.000	1 3/4"-12 x 2.000	1 1/2"-12 x 2.000	1 1/2"-12 x 3.000	2.374	3.267	.750						.312	1.500									---	.625							3.734	3.000			1.875	8.250	2.875	9.125
	2.000	1 1/2"-12 x 2.250	2"-12 x 2.250	1 3/4"-12 x 2.250	1 3/4"-12 x 3.500	2.624	3.812	.875						.312	1.688									---	.625							4.312	3.750			2.000	8.375	3.000	9.250
	2.500	1 7/8"-12 x 3.000	2 1/2"-12 x 3.000	2 1/4"-12 x 3.000	2 1/4"-12 x 4.500	3.124	3.812	1.000						.312	2.062									---	.625							4.312	3.750			2.250	8.625	3.250	9.500
	3.000	2 1/4"-12 x 3.500	3"-12 x 3.500	2 3/4"-12 x 3.500	2 3/4"-12 x 5.500	3.749	---	1.000						---	2.625									.625	---							---	---			2.250	8.625	3.250	9.500
	3.500	2 1/2"-12 x 3.500	3 1/2"-12 x 3.500	3 1/4"-12 x 3.500	3 1/4"-12 x 6.500	4.249	---	1.000						---	3.000									.625	---							---	---			2.250	8.625	3.250	9.500
6.000	1.375	1"-14 x 1.625	1 3/8"-12 x 1.625	1 1/4"-12 x 1.625	1 1/4"-12 x 2.500	1.999	3.267	.625	1.485	1.000	3.219	3.594	.140	.312	1.125	6.500	3/4	-12	.625	2.000	1.500	.656	.938	---	.625	1.500	5.000	1.125	6.375	3.250	4.992	3.734	3.000	.750	.625	1.625	8.875	2.750	10.000
	1.750	1 1/4"-12 x 2.000	1 3/4"-12 x 2.000	1 1/2"-12 x 2.000	1 1/2"-12 x 3.000	2.374	3.267	.750						.312	1.500				.625					---	.625							3.734	3.000			1.875	9.125	3.000	10.250
	2.000	1 1/2"-12 x 2.250	2"-12 x 2.250	1 3/4"-12 x 2.250	1 3/4"-12 x 3.500	2.624	3.812	.875						.312	1.688				.625					---	.625							4.312	3.750			2.000	9.250	3.125	10.375
	2.500	1 7/8"-12 x 3.000	2 1/2"-12 x 3.000	2 1/4"-12 x 3.000	2 1/4"-12 x 4.500	3.124	3.812	1.000						.312	2.062				.625					---	.625							4.312	3.750			2.250	9.500	3.375	10.625
	3.000	2 1/4"-12 x 3.500	3"-12 x 3.500	2 3/4"-12 x 3.500	2 3/4"-12 x 5.500	3.749	4.700	1.000						.375	2.625				.625					---	.625							5.562	4.500			2.250	9.500	3.375	10.625
	3.500	2 1/2"-12 x 3.500	3 1/2"-12 x 3.500	3 1/4"-12 x 3.500	3 1/4"-12 x 6.500	4.249	5.200	1.000						.375	3.000				.625					---	.625							6.062	5.000			2.250	9.500	3.375	10.625
	4.000	3"-12 x 4.000	4"-12 x 4.000	3 3/4"-12 x 4.000	3 3/4"-12 x 7.500	4.749	---	1.000						---	3.375				.750					.625	---							---	---			2.250	9.500	3.375	10.625
BORE	MM	KM & KF	KD	KI	KA	B	BC	C	CA	CD	CM	CN	CP	CS	D	E	EE	ES	F	G	J	K	KN	KS	KU	L	LB	MR	OD	P	R	RR	RS	T	TR	WB	XD	Y	ZD

NEVA DESIGN

4.21

FILE: 4.21_LH21S2.dwg REV: 02/09/2010

27650 Groesbeck Hwy • Roseville, MI 48066-2759 • Phone 586.775.7211 • Fax 586.775.4545 • Toll Free 800.526.7968 • e-mail: sales@peninsularcylinders.com • www.peninsularcylinders.com

CAP FIXED SPHERICAL EYE

Low Pressure Steel Hydraulic Cylinder

BORE	1.50	2.00	2.50	3.25	4.00	5.00	6.00
WORKING P.S.I.	1500	1500	1000	1000	1000	800	800
RATED P.S.I.	2500	2500	1500	1500	1500	1200	1200

Peninsular Mounting Style:

LH 22

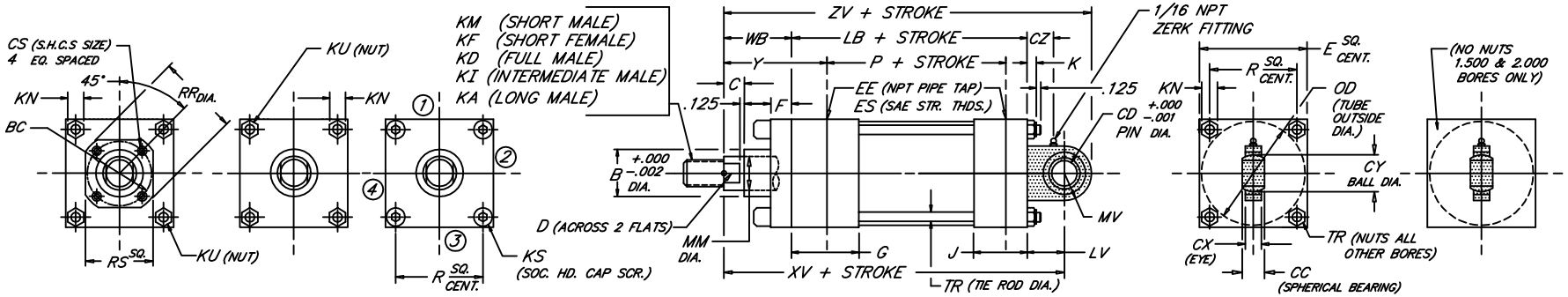

BORE	MM	KM & KF	KD	KI	KA	B	BC	C	CC	CD	CS	CX	CY	CZ	D	E	EE	ES	F	G	J	K	KN	KS	KU	LB	LV	MV	OD	P	R	RR	RS	TR	WB	XV	Y	ZV
	ROD	ROD THREAD X LENGTH															NPT/SAE																					
1.500	.625	7/16"-20 x .750	5/8"-18 x .750	1/2"-20 x .750	1/2"-20 x 1.125	1.124	---	.375	.437	.500	---	.375	.710	.438	.500	2.000	3/8	-6	.375	1.500	1.000	.344	.500	---	.312	3.625	.812	.750	1.750	2.335	1.478	---	---	.312	1.000	5.437	1.875	6.187
	1.000	3/4"-16 x 1.125	1"-14 x 1.125	7/8"-14 x 1.125	7/8"-14 x 1.875	1.499		.500							.875																				1.375	5.812	2.250	6.582
2.000	.625	7/16"-20 x .750	5/8"-18 x .750	1/2"-20 x .750	1/2"-20 x 1.125	1.124	---	.375	.437	.500	---	.375	.710	.438	.500	2.500	3/8	-6	.375	1.500	1.000	.406	.562	---	.375	3.625	.812	.750	2.375	2.335	1.966	---	---	.375	1.000	5.437	1.875	6.187
	1.000	3/4"-16 x 1.125	1"-14 x 1.125	7/8"-14 x 1.125	7/8"-14 x 1.875	1.499		.500							.875																				1.375	5.812	2.250	6.562
	1.375	1"-14 x 1.625	1 3/8"-12 x 1.625	1 1/4"-12 x 1.625	1 1/4"-12 x 2.500	1.999		.625							1.125																				1.625	6.062	2.500	6.812
2.500	.625	7/16"-20 x .750	5/8"-18 x .750	1/2"-20 x .750	1/2"-20 x 1.125	1.124	---	.375	.437	.500	---	.375	.710	.438	.500	3.000	3/8	-6	.375	1.500	1.000	.406	.562	.375	---	3.750	.812	.750	2.875	2.460	2.320	---	---	.375	1.000	5.562	1.875	6.312
	1.000	3/4"-16 x 1.125	1"-14 x 1.125	7/8"-14 x 1.125	7/8"-14 x 1.875	1.499		.500							.875																				1.375	5.937	2.250	6.687
	1.375	1"-14 x 1.625	1 3/8"-12 x 1.625	1 1/4"-12 x 1.625	1 1/4"-12 x 2.500	1.999		.625							1.125																				1.625	6.187	2.500	6.937
	1.750	1 1/4"-12 x 2.000	1 3/4"-12 x 2.000	1 1/2"-12 x 2.000	1 1/2"-12 x 3.000	2.374		.750							1.500																				1.875	6.437	2.750	7.187
3.250	1.000	3/4"-16 x 1.125	1"-14 x 1.125	7/8"-14 x 1.125	7/8"-14 x 1.875	1.499	---	.500	.656	.750	---	.562	1.086	.625	.875	3.750	1/2	-8	.625	1.750	1.250	.531	.750	.500	---	4.250	1.187	1.250	3.625	2.750	2.942	---	---	.500	1.375	6.812	2.375	8.062
	1.375	1"-14 x 1.625	1 3/8"-12 x 1.625	1 1/4"-12 x 1.625	1 1/4"-12 x 2.500	1.999		.625							1.125																				1.625	7.062	2.625	8.312
	1.750	1 1/4"-12 x 2.000	1 3/4"-12 x 2.000	1 1/2"-12 x 2.000	1 1/2"-12 x 3.000	2.374		.750							1.500																				1.875	7.312	2.875	8.562
	2.000	1 1/2"-12 x 2.250	2"-12 x 2.250	1 3/4"-12 x 2.250	1 3/4"-12 x 3.500	2.624		.875							1.688																				2.000	7.437	3.000	8.687
4.000	1.000	3/4"-16 x 1.125	1"-14 x 1.125	7/8"-14 x 1.125	7/8"-14 x 1.875	1.499	2.562	.500	.656	.750	.250	.562	1.086	.625	.875	4.500	1/2	-8	.625	1.750	1.250	.531	.750	---	.500	4.250	1.187	1.250	4.375	2.750	3.469	2.969	2.500	.500	1.375	6.812	2.375	8.062
	1.375	1"-14 x 1.625	1 3/8"-12 x 1.625	1 1/4"-12 x 1.625	1 1/4"-12 x 2.500	1.999	2.562	.625			.250				1.125									---	.500							2.969	2.500		1.625	7.062	2.625	8.312
	1.750	1 1/4"-12 x 2.000	1 3/4"-12 x 2.000	1 1/2"-12 x 2.000	1 1/2"-12 x 3.000	2.374	3.267	.750			.312				1.500									---	.500							3.734	3.000		1.875	7.312	2.875	8.562
	2.000	1 1/2"-12 x 2.250	2"-12 x 2.250	1 3/4"-12 x 2.250	1 3/4"-12 x 3.500	2.624	---	.875			---				1.688									.500	---							---	---		2.000	7.437	3.000	8.687
	2.500	1 7/8"-12 x 3.000	2 1/2"-12 x 3.000	2 1/4"-12 x 3.000	2 1/4"-12 x 4.500	3.124	---	1.000			---				2.062									.500	---							---	---		2.250	7.687	3.250	8.937
5.000	1.000	3/4"-16 x 1.125	1"-14 x 1.125	7/8"-14 x 1.125	7/8"-14 x 1.875	1.499	2.562	.500	.656	.750	.250	.562	1.086	.625	.875	5.500	1/2	-8	.625	1.750	1.250	.656	.938	---	.625	4.500	1.187	1.250	5.375	3.000	4.285	2.969	2.500	.625	1.375	7.062	2.375	8.312
	1.375	1"-14 x 1.625	1 3/8"-12 x 1.625	1 1/4"-12 x 1.625	1 1/4"-12 x 2.500	1.999	2.562	.625			.250				1.125									---	.625							2.969	2.500		1.625	7.312	2.625	8.562
	1.750	1 1/4"-12 x 2.000	1 3/4"-12 x 2.000	1 1/2"-12 x 2.000	1 1/2"-12 x 3.000	2.374	3.267	.750			.312				1.500									---	.625							3.734	3.000		1.875	7.562	2.875	8.812
	2.000	1 1/2"-12 x 2.250	2"-12 x 2.250	1 3/4"-12 x 2.250	1 3/4"-12 x 3.500	2.624	3.812	.875			.312				1.688									---	.625							4.312	3.750		2.000	7.687	3.000	8.937
	2.500	1 7/8"-12 x 3.000	2 1/2"-12 x 3.000	2 1/4"-12 x 3.000	2 1/4"-12 x 4.500	3.124	3.812	1.000			.312				2.062									---	.625							4.312	3.750		2.250	7.937	3.250	9.187
	3.000	2 1/4"-12 x 3.500	3"-12 x 3.500	2 3/4"-12 x 3.500	2 3/4"-12 x 5.500	3.749	---	1.000			---				2.625									.625	---							---	---		2.250	7.937	3.250	9.187
	3.500	2 1/2"-12 x 3.500	3 1/2"-12 x 3.500	3 1/4"-12 x 3.500	3 1/4"-12 x 6.500	4.249	---	1.000			---				3.000									.625	---							---	---		2.250	7.937	3.250	9.187
6.000	1.375	1"-14 x 1.625	1 3/8"-12 x 1.625	1 1/4"-12 x 1.625	1 1/4"-12 x 2.500	1.999	3.267	.625	.875	1.000	.312	.750	1.436	.812	1.125	6.500	3/4	-12	.625	2.000	1.500	.656	.938	---	.625	5.000	1.562	1.500	6.375	3.250	4.992	3.734	3.000	.625	1.625	8.187	2.750	9.687
	1.750	1 1/4"-12 x 2.000	1 3/4"-12 x 2.000	1 1/2"-12 x 2.000	1 1/2"-12 x 3.000	2.374	3.267	.750			.312				1.500				.625					---	.625							3.734	3.000		1.875	8.437	3.000	9.937
	2.000	1 1/2"-12 x 2.250	2"-12 x 2.250	1 3/4"-12 x 2.250	1 3/4"-12 x 3.500	2.624	3.812	.875			.312				1.688				.625					---	.625							4.312	3.750		2.000	8.562	3.125	10.062
	2.500	1 7/8"-12 x 3.000	2 1/2"-12 x 3.000	2 1/4"-12 x 3.000	2 1/4"-12 x 4.500	3.124	3.812	1.000			.312				2.062				.625					---	.625							4.312	3.750		2.250	8.812	3.375	10.312
	3.000	2 1/4"-12 x 3.500	3"-12 x 3.500	2 3/4"-12 x 3.500	2 3/4"-12 x 5.500	3.749	4.700	1.000			.375				2.625				.625					---	.625							5.562	4.500		2.250	8.812	3.375	10.312
	3.500	2 1/2"-12 x 3.500	3 1/2"-12 x 3.500	3 1/4"-12 x 3.500	3 1/4"-12 x 6.500	4.249	5.200	1.000			.375				3.000				.625					---	.625							6.062	5.000		2.250	8.812	3.375	10.312
	4.000	3"-12 x 4.000	4"-12 x 4.000	3 3/4"-12 x 4.000	3 3/4"-12 x 7.500	4.749	---	1.000			---				3.375				.750					.625	---							---	---		2.250	8.812	3.375	10.312
BORE	MM	KM & KF	KD	KI	KA	B	BC	C	CC	CD	CS	CX	CY	CZ	D	E	EE	ES	F	G	J	K	KN	KS	KU	LB	LV	MV	OD	P	R	RR	RS	TR	WB	XV	Y	ZV

NEVA DESIGN

4.22

FILE: 4.22_LH22S2.dwg REV: 02/09/2010

27650 Groesbeck Hwy • Roseville, MI 48066-2759 • Phone 586.775.7211 • Fax 586.775.4545 • Toll Free 800.526.7968 • e-mail: sales@peninsularcylinders.com • www.peninsularcylinders.com

CAP DETACHABLE CLEVIS

Low Pressure Steel Hydraulic Cylinder

BORE	1.50	2.00	2.50	3.25	4.00	5.00	6.00
WORKING P.S.I.	1500	1500	1000	1000	1000	800	800
RATED P.S.I.	2500	2500	1500	1500	1500	1200	1200

Peninsular Mounting Style: **LH 24**

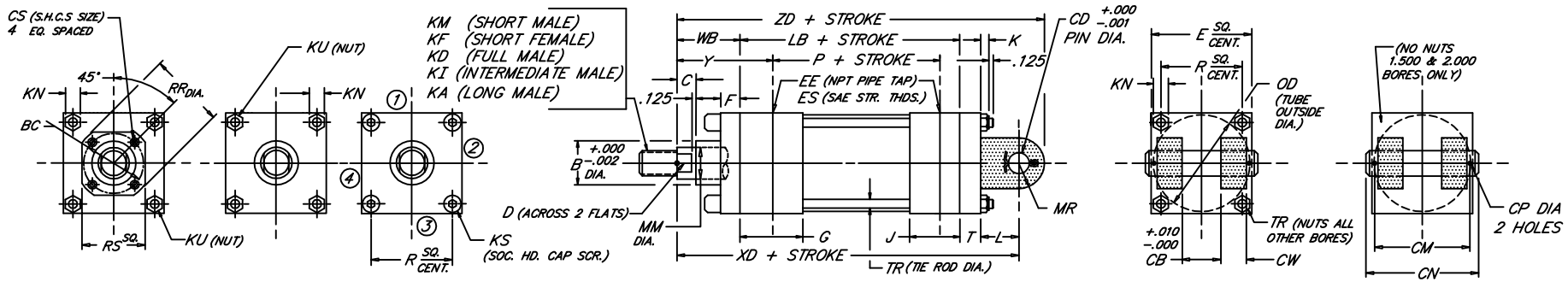

BORE	ROD MM	ROD THREAD X LENGTH KM & KF	KD	KI	KA	B	BC	C	CB	CD	CM	CN	CP	CS	CW	D	E	EE	ES	F	G	J	K	KN	KS	KU	L	LB	MR	OD	P	R	RR	RS	T	TR	WB	XD	Y	ZD
1.500	.625	7/16"-20 x .750	5/8"-18 x .750	1/2"-20 x .750	1/2"-20 x 1.125	1.124	---	.375	.765	.500	1.938	2.281	.106	---	.500	.500	2.000	3/8	-6	.375	1.500	1.000	.344	.500	---	.312	.750	3.625	.625	1.750	2.335	1.478	---	---	.375	.312	1.000	5.750	1.875	6.375
	1.000	3/4"-16 x 1.125	1"-14 x 1.125	7/8"-14 x 1.125	7/8"-14 x 1.875	1.499		.500								.875																					1.375	6.125	2.250	6.750
2.000	.625	7/16"-20 x .750	5/8"-18 x .750	1/2"-20 x .750	1/2"-20 x 1.125	1.124	---	.375	.765	.500	1.938	2.281	.106	---	.500	.500	2.500	3/8	-6	.375	1.500	1.000	.406	.562	---	.375	.750	3.625	.625	2.375	2.335	1.966	---	---	.375	.375	1.000	5.750	1.875	6.375
	1.000	3/4"-16 x 1.125	1"-14 x 1.125	7/8"-14 x 1.125	7/8"-14 x 1.875	1.499		.500								.875																					1.375	6.125	2.250	6.750
	1.375	1"-14 x 1.625	1 3/8"-12 x 1.625	1 1/4"-12 x 1.625	1 1/4"-12 x 2.500	1.999		.625								1.125																					1.625	6.375	2.500	7.000
2.500	.625	7/16"-20 x .750	5/8"-18 x .750	1/2"-20 x .750	1/2"-20 x 1.125	1.124	---	.375	.765	.500	1.938	2.281	.106	---	.500	.500	3.000	3/8	-6	.375	1.500	1.000	.406	.562	.375	---	.750	3.750	.625	2.875	2.460	2.320	---	---	.375	.375	1.000	5.875	1.875	6.500
	1.000	3/4"-16 x 1.125	1"-14 x 1.125	7/8"-14 x 1.125	7/8"-14 x 1.875	1.499		.500								.875																					1.375	6.250	2.250	6.875
	1.375	1"-14 x 1.625	1 3/8"-12 x 1.625	1 1/4"-12 x 1.625	1 1/4"-12 x 2.500	1.999		.625								1.125																					1.625	6.500	2.500	7.125
	1.750	1 1/4"-12 x 2.000	1 3/4"-12 x 2.000	1 1/2"-12 x 2.000	1 1/2"-12 x 3.000	2.374		.750								1.500																					1.875	6.750	2.750	7.375
3.250	1.000	3/4"-16 x 1.125	1"-14 x 1.125	7/8"-14 x 1.125	7/8"-14 x 1.875	1.499		.500								.875																					1.375	7.500	2.375	8.375
	1.375	1"-14 x 1.625	1 3/8"-12 x 1.625	1 1/4"-12 x 1.625	1 1/4"-12 x 2.500	1.999	---	.625	1.265	.750	2.719	3.094	.140	---	.625	1.125	3.750	1/2	-8	.625	1.750	1.250	.531	.750	.500	---	1.250	4.250	.875	3.625	2.750	2.942	---	---	.625	.500	1.625	7.750	2.625	8.625
	1.750	1 1/4"-12 x 2.000	1 3/4"-12 x 2.000	1 1/2"-12 x 2.000	1 1/2"-12 x 3.000	2.374		.750								1.500																					1.875	8.000	2.875	8.875
	2.000	1 1/2"-12 x 2.250	2"-12 x 2.250	1 3/4"-12 x 2.250	1 3/4"-12 x 3.500	2.624		.875								1.688																					2.000	8.125	3.000	9.000
4.000	1.000	3/4"-16 x 1.125	1"-14 x 1.125	7/8"-14 x 1.125	7/8"-14 x 1.875	1.499	2.562	.500						.250		.875									---	.500							2.969	2.500			1.375	7.500	2.375	8.375
	1.375	1"-14 x 1.625	1 3/8"-12 x 1.625	1 1/4"-12 x 1.625	1 1/4"-12 x 2.500	1.999	2.562	.625						.250		1.125									---	.500							2.969	2.500			1.625	7.750	2.625	8.625
	1.750	1 1/4"-12 x 2.000	1 3/4"-12 x 2.000	1 1/2"-12 x 2.000	1 1/2"-12 x 3.000	2.374	3.267	.750	1.265	.750	2.719	3.094	.140	.312	.625	1.500	4.500	1/2	-8	.625	1.750	1.250	.531	.750	---	.500	1.250	4.250	.875	4.375	2.750	3.469	3.734	3.000	.625	.500	1.875	8.000	2.875	8.875
	2.000	1 1/2"-12 x 2.250	2"-12 x 2.250	1 3/4"-12 x 2.250	1 3/4"-12 x 3.500	2.624	---	.875						---		1.688									.500	---							---	---			2.000	8.125	3.000	9.000
	2.500	1 7/8"-12 x 3.000	2 1/2"-12 x 3.000	2 1/4"-12 x 3.000	2 1/4"-12 x 4.500	3.124	---	1.000						---		2.062									.500	---							---	---			2.250	8.375	3.250	9.250
5.000	1.000	3/4"-16 x 1.125	1"-14 x 1.125	7/8"-14 x 1.125	7/8"-14 x 1.875	1.499	2.562	.500						.250		.875									---	.625							2.969	2.500			1.375	7.750	2.375	8.625
	1.375	1"-14 x 1.625	1 3/8"-12 x 1.625	1 1/4"-12 x 1.625	1 1/4"-12 x 2.500	1.999	2.562	.625						.250		1.125									---	.625							2.969	2.500			1.625	8.000	2.625	8.875
	1.750	1 1/4"-12 x 2.000	1 3/4"-12 x 2.000	1 1/2"-12 x 2.000	1 1/2"-12 x 3.000	2.374	3.267	.750						.312		1.500									---	.625							3.734	3.000			1.875	8.250	2.875	9.125
	2.000	1 1/2"-12 x 2.250	2"-12 x 2.250	1 3/4"-12 x 2.250	1 3/4"-12 x 3.500	2.624	3.812	.875	1.265	.750	2.719	3.094	.140	.312	.625	1.688	5.500	1/2	-8	.625	1.750	1.250	.656	.938	---	.625	1.250	4.500	.875	5.375	3.000	4.285	4.312	3.750	.625	.625	2.000	8.375	3.000	9.250
	2.500	1 7/8"-12 x 3.000	2 1/2"-12 x 3.000	2 1/4"-12 x 3.000	2 1/4"-12 x 4.500	3.124	3.812	1.000						.312		2.062									---	.625							4.312	3.750			2.250	8.625	3.250	9.500
	3.000	2 1/4"-12 x 3.500	3"-12 x 3.500	2 3/4"-12 x 3.500	2 3/4"-12 x 5.500	3.749	---	1.000						---		2.625									.625	---							---	---			2.250	8.625	3.250	9.500
	3.500	2 1/2"-12 x 3.500	3 1/2"-12 x 3.500	3 1/4"-12 x 3.500	3 1/4"-12 x 6.500	4.249	---	1.000						---		3.000									.625	---							---	---			2.250	8.625	3.250	9.500
6.000	1.375	1"-14 x 1.625	1 3/8"-12 x 1.625	1 1/4"-12 x 1.625	1 1/4"-12 x 2.500	1.999	3.267	.625						.312		1.125				.625					---	.625							3.734	3.000			1.625	8.875	2.750	10.000
	1.750	1 1/4"-12 x 2.000	1 3/4"-12 x 2.000	1 1/2"-12 x 2.000	1 1/2"-12 x 3.000	2.374	3.267	.750						.312		1.500				.625					---	.625							3.734	3.000			1.875	9.125	3.000	10.250
	2.000	1 1/2"-12 x 2.250	2"-12 x 2.250	1 3/4"-12 x 2.250	1 3/4"-12 x 3.500	2.624	3.812	.875						.312		1.688				.625					---	.625							4.312	3.750			2.000	9.250	3.125	10.375
	2.500	1 7/8"-12 x 3.000	2 1/2"-12 x 3.000	2 1/4"-12 x 3.000	2 1/4"-12 x 4.500	3.124	3.812	1.000	1.515	1.000	3.219	3.594	.140	.312	.750	2.062	6.500	3/4	-12	.625	2.000	1.500	.656	.938	---	.625	1.500	5.000	1.125	6.375	3.250	4.992	4.312	3.750	.750	.625	2.250	9.500	3.375	10.625
	3.000	2 1/4"-12 x 3.500	3"-12 x 3.500	2 3/4"-12 x 3.500	2 3/4"-12 x 5.500	3.749	4.700	1.000						.375		2.625				.625					---	.625							5.562	4.500			2.250	9.500	3.375	10.625
	3.500	2 1/2"-12 x 3.500	3 1/2"-12 x 3.500	3 1/4"-12 x 3.500	3 1/4"-12 x 6.500	4.249	5.200	1.000						.375		3.000				.625					---	.625							6.062	5.000			2.250	9.500	3.375	10.625
	4.000	3"-12 x 4.000	4"-12 x 4.000	3 3/4"-12 x 4.000	3 3/4"-12 x 7.500	4.749	---	1.000						---		3.375				.750					.625	---							---	---			2.250	9.500	3.375	10.625

NEVA DESIGN

4.24

FILE: 4.24_LH24S2.dwg REV: 02/09/2010

27650 Groesbeck Hwy • Roseville, MI 48066-2759 • Phone 586.775.7211 • Fax 586.775.4545 • Toll Free 800.526.7968 • e-mail: sales@peninsularcylinders.com • www.peninsularcylinders.com

CAP FIXED EYE

Low Pressure Steel Hydraulic Cylinder

BORE	1.50	2.00	2.50	3.25	4.00	5.00	6.00
WORKING P.S.I.	1500	1500	1000	1000	1000	800	800
RATED P.S.I.	2500	2500	1500	1500	1500	1200	1200

Peninsular Mounting Style: **LH 25**

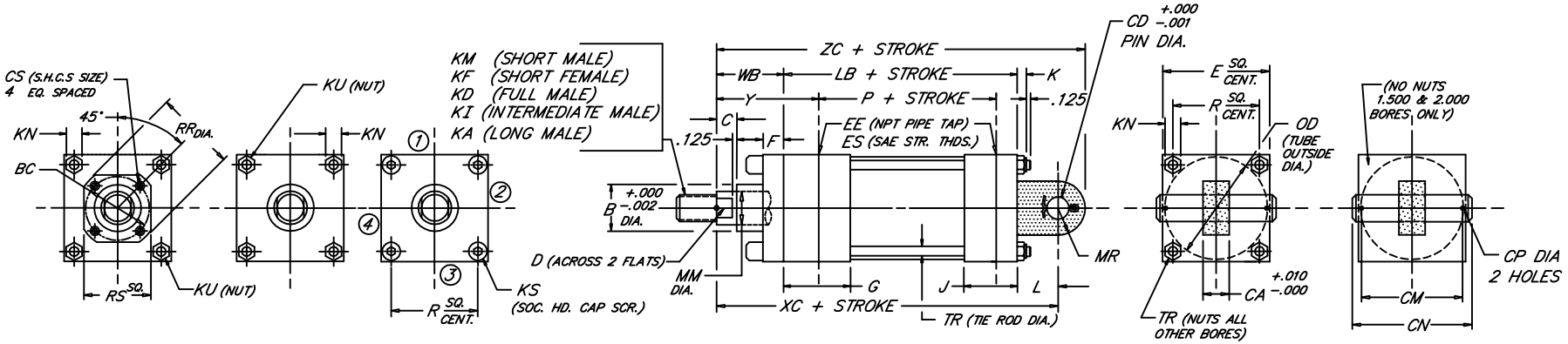

BORE	ROD MM	ROD THREAD X LENGTH KM & KF	KD	KI	KA	B	BC	C	CA	CD	CM	CN	CP	CS	D	E	EE	ES	F	G	J	K	KN	KS	KU	L	LB	MR	OD	P	R	RR	RS	TR	WB	XC	Y	ZC
1.500	.625	7/16"-20 x .750	5/8"-18 x .750	1/2"-20 x .750	1/2"-20 x 1.125	1.124	---	.375	.735	.500	1.938	2.281	.106	---	.500	2.000	3/8	-6	.375	1.500	1.000	.344	.500	---	.312	.750	3.625	.500	1.750	2.335	1.478	---	---	.312	1.000	5.375	1.875	5.875
	1.000	3/4"-16 x 1.125	1"-14 x 1.125	7/8"-14 x 1.125	7/8"-14 x 1.875	1.499		.500							.875																				1.375	5.750	2.250	6.250
2.000	.625	7/16"-20 x .750	5/8"-18 x .750	1/2"-20 x .750	1/2"-20 x 1.125	1.124	---	.375	.735	.500	1.938	2.281	.106	---	.500	2.500	3/8	-6	.375	1.500	1.000	.406	.562	---	.375	.750	3.625	.500	2.375	2.335	1.966	---	---	.375	1.000	5.375	1.875	5.875
	1.000	3/4"-16 x 1.125	1"-14 x 1.125	7/8"-14 x 1.125	7/8"-14 x 1.875	1.499		.500							.875																				1.375	5.750	2.250	6.250
	1.375	1"-14 x 1.625	1 3/8"-12 x 1.625	1 1/4"-12 x 1.625	1 1/4"-12 x 2.500	1.999		.625							1.125																				1.625	6.000	2.500	6.500
2.500	.625	7/16"-20 x .750	5/8"-18 x .750	1/2"-20 x .750	1/2"-20 x 1.125	1.124	---	.375	.735	.500	1.938	2.281	.106	---	.500	3.000	3/8	-6	.375	1.500	1.000	.406	.562	.375	---	.750	3.750	.500	2.875	2.460	2.320	---	---	.375	1.000	5.500	1.875	6.000
	1.000	3/4"-16 x 1.125	1"-14 x 1.125	7/8"-14 x 1.125	7/8"-14 x 1.875	1.499		.500							.875																				1.375	5.875	2.250	6.375
	1.375	1"-14 x 1.625	1 3/8"-12 x 1.625	1 1/4"-12 x 1.625	1 1/4"-12 x 2.500	1.999		.625							1.125																				1.625	6.125	2.500	6.625
	1.750	1 1/4"-12 x 2.000	1 3/4"-12 x 2.000	1 1/2"-12 x 2.000	1 1/2"-12 x 3.000	2.374		.750							1.500																				1.875	6.375	2.750	6.875
3.250	1.000	3/4"-16 x 1.125	1"-14 x 1.125	7/8"-14 x 1.125	7/8"-14 x 1.875	1.499	---	.500	1.235	.750	2.719	3.094	.140	---	.875	3.750	1/2	-8	.625	1.750	1.250	.531	.750	.500	---	1.250	4.250	.750	3.625	2.750	2.942	---	---	.500	1.375	6.875	2.375	7.625
	1.375	1"-14 x 1.625	1 3/8"-12 x 1.625	1 1/4"-12 x 1.625	1 1/4"-12 x 2.500	1.999		.625							1.125																				1.625	7.125	2.625	7.875
	1.750	1 1/4"-12 x 2.000	1 3/4"-12 x 2.000	1 1/2"-12 x 2.000	1 1/2"-12 x 3.000	2.374		.750							1.500																				1.875	7.375	2.875	8.125
	2.000	1 1/2"-12 x 2.250	2"-12 x 2.250	1 3/4"-12 x 2.250	1 3/4"-12 x 3.500	2.624		.875							1.688																				2.000	7.500	3.000	8.250
4.000	1.000	3/4"-16 x 1.125	1"-14 x 1.125	7/8"-14 x 1.125	7/8"-14 x 1.875	1.499	2.562	.500	1.235	.750	2.719	3.094	.140	.250	.875	4.500	1/2	-8	.625	1.750	1.250	.531	.750	---	.500	1.250	4.250	.750	4.375	2.750	3.469	2.969	2.500	.500	1.375	6.875	2.375	7.625
	1.375	1"-14 x 1.625	1 3/8"-12 x 1.625	1 1/4"-12 x 1.625	1 1/4"-12 x 2.500	1.999	2.562	.625						.250	1.125									---	.500							2.969	2.500		1.625	7.125	2.625	7.875
	1.750	1 1/4"-12 x 2.000	1 3/4"-12 x 2.000	1 1/2"-12 x 2.000	1 1/2"-12 x 3.000	2.374	3.267	.750						.312	1.500									---	.500							3.734	3.000		1.875	7.375	2.875	8.125
	2.000	1 1/2"-12 x 2.250	2"-12 x 2.250	1 3/4"-12 x 2.250	1 3/4"-12 x 3.500	2.624	---	.875						---	1.688									.500	---							---	---		2.000	7.500	3.000	8.250
	2.500	1 7/8"-12 x 3.000	2 1/2"-12 x 3.000	2 1/4"-12 x 3.000	2 1/4"-12 x 4.500	3.124	---	1.000						---	2.062									.500	---							---	---		2.250	7.750	3.250	8.500
5.000	1.000	3/4"-16 x 1.125	1"-14 x 1.125	7/8"-14 x 1.125	7/8"-14 x 1.875	1.499	2.562	.500	1.235	.750	2.719	3.094	.140	.250	.875	5.500	1/2	-8	.625	1.750	1.250	.656	.938	---	.625	1.250	4.500	.750	5.375	3.000	4.285	2.969	2.500	.625	1.375	7.125	2.375	7.875
	1.375	1"-14 x 1.625	1 3/8"-12 x 1.625	1 1/4"-12 x 1.625	1 1/4"-12 x 2.500	1.999	2.562	.625						.250	1.125									---	.625							2.969	2.500		1.625	7.375	2.625	8.125
	1.750	1 1/4"-12 x 2.000	1 3/4"-12 x 2.000	1 1/2"-12 x 2.000	1 1/2"-12 x 3.000	2.374	3.267	.750						.312	1.500									---	.625							3.734	3.000		1.875	7.625	2.875	8.375
	2.000	1 1/2"-12 x 2.250	2"-12 x 2.250	1 3/4"-12 x 2.250	1 3/4"-12 x 3.500	2.624	3.812	.875						.312	1.688									---	.625							4.312	3.750		2.000	7.750	3.000	8.500
	2.500	1 7/8"-12 x 3.000	2 1/2"-12 x 3.000	2 1/4"-12 x 3.000	2 1/4"-12 x 4.500	3.124	3.812	1.000						.312	2.062									---	.625							4.312	3.750		2.250	8.000	3.250	8.750
	3.000	2 1/4"-12 x 3.500	3"-12 x 3.500	2 3/4"-12 x 3.500	2 3/4"-12 x 5.500	3.749	---	1.000						---	2.625									.625	---							---	---		2.250	8.000	3.250	8.750
	3.500	2 1/2"-12 x 3.500	3 1/2"-12 x 3.500	3 1/4"-12 x 3.500	3 1/4"-12 x 6.500	4.249	---	1.000						---	3.000									.625	---							---	---		2.250	8.000	3.250	8.750
6.000	1.375	1"-14 x 1.625	1 3/8"-12 x 1.625	1 1/4"-12 x 1.625	1 1/4"-12 x 2.500	1.999	3.267	.625	1.485	1.000	3.219	3.594	.140	.312	1.125	6.500	3/4	-12	.625	2.000	1.500	.656	.938	---	.625	1.500	5.000	1.000	6.375	3.250	4.992	3.734	3.000	.625	1.625	8.125	2.750	9.125
	1.750	1 1/4"-12 x 2.000	1 3/4"-12 x 2.000	1 1/2"-12 x 2.000	1 1/2"-12 x 3.000	2.374	3.267	.750						.312	1.500				.625					---	.625							3.734	3.000		1.875	8.375	3.000	9.375
	2.000	1 1/2"-12 x 2.250	2"-12 x 2.250	1 3/4"-12 x 2.250	1 3/4"-12 x 3.500	2.624	3.812	.875						.312	1.688				.625					---	.625							4.312	3.750		2.000	8.500	3.125	9.500
	2.500	1 7/8"-12 x 3.000	2 1/2"-12 x 3.000	2 1/4"-12 x 3.000	2 1/4"-12 x 4.500	3.124	3.812	1.000						.312	2.062				.625					---	.625							4.312	3.750		2.250	8.750	3.375	9.750
	3.000	2 1/4"-12 x 3.500	3"-12 x 3.500	2 3/4"-12 x 3.500	2 3/4"-12 x 5.500	3.749	4.700	1.000						.375	2.625				.625					---	.625							5.562	4.500		2.250	8.750	3.375	9.750
	3.500	2 1/2"-12 x 3.500	3 1/2"-12 x 3.500	3 1/4"-12 x 3.500	3 1/4"-12 x 6.500	4.249	5.200	1.000						.375	3.000				.625					---	.625							6.062	5.000		2.250	8.750	3.375	9.750
	4.000	3"-12 x 4.000	4"-12 x 4.000	3 3/4"-12 x 4.000	3 3/4"-12 x 7.500	4.749	---	1.000						---	3.375				.750					.625	---							---	---		2.250	8.750	3.375	9.750
BORE	MM	KM & KF	KD	KI	KA	B	BC	C	CA	CD	CM	CN	CP	CS	D	E	EE	ES	F	G	J	K	KN	KS	KU	L	LB	MR	OD	P	R	RR	RS	TR	WB	XC	Y	ZC

4.25

NEVA DESIGN

FILE: 4.25_LH25S2.dwg REV: 02/09/2010

27650 Groesbeck Hwy • Roseville, MI 48066-2759 • Phone 586.775.7211 • Fax 586.775.4545 • Toll Free 800.526.7968 • e-mail: sales@peninsularcylinders.com • www.peninsularcylinders.com

CAP DETACHABLE CLEVIS

Low Pressure Steel Hydraulic Cylinder

BORE	1.50	2.00	2.50	3.25	4.00	5.00	6.00
WORKING P.S.I.	1500	1500	1000	1000	1000	800	800
RATED P.S.I.	2500	2500	1500	1500	1500	1200	1200

Peninsular Mounting Style: **LH 27**

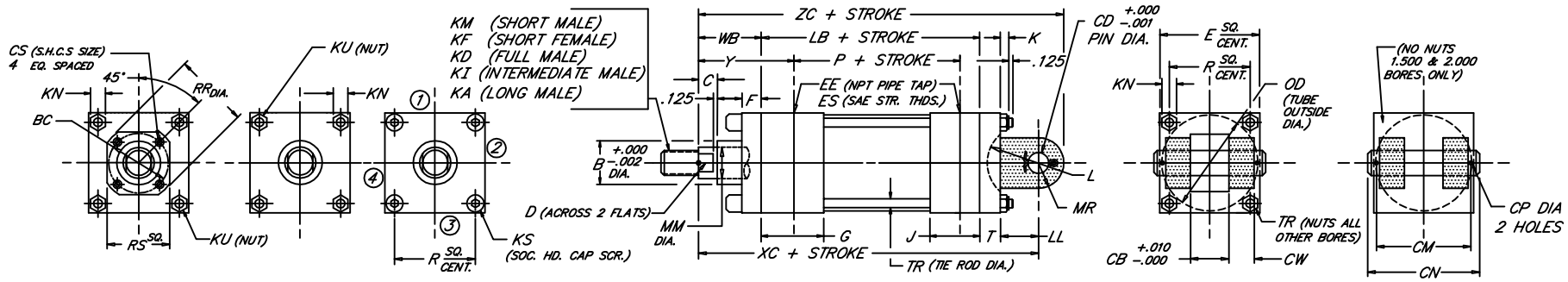

BORE	MM	ROD: KM & KF	ROD: KD	ROD: KI	ROD: KA	B	BC	C	CB	CD	CM	CN	CP	CS	CW	D	E	EE (NPT)	ES (SAE)	F	G	J	K	KN	KS	KU	L	LB	LL	MR	OD	P	R	RR	RS	T	TR	WB	XC	Y	ZC
1.500	.625	7/16"-20 x .750	5/8"-18 x .750	1/2"-20 x .750	1/2"-20 x 1.125	1.124	---	.375	.765	.500	1.938	2.281	.106	---	.500	.500	2.000	3/8	-6	.375	1.500	1.000	.344	.500	---	.312	.625	3.625	.375	.625	1.750	2.335	1.478	---	---	.375	.312	1.000	5.375	1.875	6.000
	1.000	3/4"-16 x 1.125	1"-14 x 1.125	7/8"-14 x 1.125	7/8"-14 x 1.875	1.499		.500								.875																						1.375	5.750	2.250	6.375
2.000	.625	7/16"-20 x .750	5/8"-18 x .750	1/2"-20 x .750	1/2"-20 x 1.125	1.124	---	.375	.765	.500	1.938	2.281	.106	---	.500	.500	2.500	3/8	-6	.375	1.500	1.000	.406	.562	---	.375	.625	3.625	.375	.625	2.375	2.335	1.966	---	---	.375	.375	1.000	5.375	1.875	6.000
	1.000	3/4"-16 x 1.125	1"-14 x 1.125	7/8"-14 x 1.125	7/8"-14 x 1.875	1.499		.500								.875																						1.375	5.750	2.250	6.375
	1.375	1"-14 x 1.625	1 3/8"-12 x 1.625	1 1/4"-12 x 1.625	1 1/4"-12 x 2.500	1.999		.625								1.125																						1.625	6.000	2.500	6.625
2.500	.625	7/16"-20 x .750	5/8"-18 x .750	1/2"-20 x .750	1/2"-20 x 1.125	1.124	---	.375	.765	.500	1.938	2.281	.106	---	.500	.500	3.000	3/8	-6	.375	1.500	1.000	.406	.562	.375	---	.625	3.750	.375	.625	2.875	2.460	2.320	---	---	.375	.375	1.000	5.500	1.875	6.125
	1.000	3/4"-16 x 1.125	1"-14 x 1.125	7/8"-14 x 1.125	7/8"-14 x 1.875	1.499		.500								.875																						1.375	5.875	2.250	6.500
	1.375	1"-14 x 1.625	1 3/8"-12 x 1.625	1 1/4"-12 x 1.625	1 1/4"-12 x 2.500	1.999		.625								1.125																						1.625	6.125	2.500	6.750
	1.750	1 1/4"-12 x 2.000	1 3/4"-12 x 2.000	1 1/2"-12 x 2.000	1 1/2"-12 x 3.000	2.374		.750								1.500																						1.875	6.375	2.750	7.000
3.250	1.000	3/4"-16 x 1.125	1"-14 x 1.125	7/8"-14 x 1.125	7/8"-14 x 1.875	1.499	---	.500	1.265	.750	2.719	3.094	.140	---	.625	.875	3.750	1/2	-8	.625	1.750	1.250	.531	.750	.500	---	.875	4.250	.625	.875	3.625	2.750	2.942	---	---	.625	.500	1.375	6.875	2.375	7.750
	1.375	1"-14 x 1.625	1 3/8"-12 x 1.625	1 1/4"-12 x 1.625	1 1/4"-12 x 2.500	1.999		.625								1.125																						1.625	7.125	2.625	8.000
	1.750	1 1/4"-12 x 2.000	1 3/4"-12 x 2.000	1 1/2"-12 x 2.000	1 1/2"-12 x 3.000	2.374		.750								1.500																						1.875	7.375	2.875	8.250
	2.000	1 1/2"-12 x 2.250	2"-12 x 2.250	1 3/4"-12 x 2.250	1 3/4"-12 x 3.500	2.624		.875								1.688																						2.000	7.500	3.000	8.375
4.000	1.000	3/4"-16 x 1.125	1"-14 x 1.125	7/8"-14 x 1.125	7/8"-14 x 1.875	1.499	2.562	.500	1.265	.750	2.719	3.094	.140	.250	.625	.875	4.500	1/2	-8	.625	1.750	1.250	.531	.750	---	.500	.875	4.250	.625	.875	4.375	2.750	3.469	2.969	2.500	.625	.500	1.375	6.875	2.375	7.750
	1.375	1"-14 x 1.625	1 3/8"-12 x 1.625	1 1/4"-12 x 1.625	1 1/4"-12 x 2.500	1.999	2.562	.625						.250		1.125									---	.500								2.969	2.500			1.625	7.125	2.625	8.000
	1.750	1 1/4"-12 x 2.000	1 3/4"-12 x 2.000	1 1/2"-12 x 2.000	1 1/2"-12 x 3.000	2.374	3.267	.750						.312		1.500									---	.500								3.734	3.000			1.875	7.375	2.875	8.250
	2.000	1 1/2"-12 x 2.250	2"-12 x 2.250	1 3/4"-12 x 2.250	1 3/4"-12 x 3.500	2.624	---	.875						---		1.688									.500	---								---	---			2.000	7.500	3.000	8.375
	2.500	1 7/8"-12 x 3.000	2 1/2"-12 x 3.000	2 1/4"-12 x 3.000	2 1/4"-12 x 4.500	3.124	---	1.000						---		2.062									.500	---								---	---			2.250	7.750	3.250	8.625
5.000	1.000	3/4"-16 x 1.125	1"-14 x 1.125	7/8"-14 x 1.125	7/8"-14 x 1.875	1.499	2.562	.500	1.265	.750	2.719	3.094	.140	.250	.625	.875	5.500	1/2	-8	.625	1.750	1.250	.656	.938	---	.625	.875	4.500	.625	.875	5.375	3.000	4.285	2.969	2.500	.625	.625	1.375	7.125	2.375	8.000
	1.375	1"-14 x 1.625	1 3/8"-12 x 1.625	1 1/4"-12 x 1.625	1 1/4"-12 x 2.500	1.999	2.562	.625						.250		1.125									---	.625								2.969	2.500			1.625	7.375	2.625	8.250
	1.750	1 1/4"-12 x 2.000	1 3/4"-12 x 2.000	1 1/2"-12 x 2.000	1 1/2"-12 x 3.000	2.374	3.267	.750						.312		1.500									---	.625								3.734	3.000			1.875	7.625	2.875	8.500
	2.000	1 1/2"-12 x 2.250	2"-12 x 2.250	1 3/4"-12 x 2.250	1 3/4"-12 x 3.500	2.624	3.812	.875						.312		1.688									---	.625								4.312	3.750			2.000	7.750	3.000	8.625
	2.500	1 7/8"-12 x 3.000	2 1/2"-12 x 3.000	2 1/4"-12 x 3.000	2 1/4"-12 x 4.500	3.124	3.812	1.000						.312		2.062									---	.625								4.312	3.750			2.250	8.000	3.250	8.875
	3.000	2 1/4"-12 x 3.500	3"-12 x 3.500	2 3/4"-12 x 3.500	2 3/4"-12 x 5.500	3.749	---	1.000						---		2.625									.625	---								---	---			2.250	8.000	3.250	8.875
	3.500	2 1/2"-12 x 3.500	3 1/2"-12 x 3.500	3 1/4"-12 x 3.500	3 1/4"-12 x 6.500	4.249	---	1.000						---		3.000									.625	---								---	---			2.250	8.000	3.250	8.875
6.000	1.375	1"-14 x 1.625	1 3/8"-12 x 1.625	1 1/4"-12 x 1.625	1 1/4"-12 x 2.500	1.999	3.267	.625	1.515	1.000	3.219	3.594	.140	.312	.750	1.125	6.500	3/4	-12	.625	2.000	1.500	.656	.938	---	.625	1.125	5.000	.750	1.250	6.375	3.250	4.992	3.734	3.000	.750	.625	1.625	8.125	2.750	9.375
	1.750	1 1/4"-12 x 2.000	1 3/4"-12 x 2.000	1 1/2"-12 x 2.000	1 1/2"-12 x 3.000	2.374	3.267	.750						.312		1.500				.625					---	.625								3.734	3.000			1.875	8.375	3.000	9.625
	2.000	1 1/2"-12 x 2.250	2"-12 x 2.250	1 3/4"-12 x 2.250	1 3/4"-12 x 3.500	2.624	3.812	.875						.312		1.688				.625					---	.625								4.312	3.750			2.000	8.500	3.125	9.750
	2.500	1 7/8"-12 x 3.000	2 1/2"-12 x 3.000	2 1/4"-12 x 3.000	2 1/4"-12 x 4.500	3.124	3.812	1.000						.312		2.062				.625					---	.625								4.312	3.750			2.250	8.750	3.375	10.000
	3.000	2 1/4"-12 x 3.500	3"-12 x 3.500	2 3/4"-12 x 3.500	2 3/4"-12 x 5.500	3.749	4.700	1.000						.375		2.625				.625					---	.625								5.562	4.500			2.250	8.750	3.375	10.000
	3.500	2 1/2"-12 x 3.500	3 1/2"-12 x 3.500	3 1/4"-12 x 3.500	3 1/4"-12 x 6.500	4.249	5.200	1.000						.375		3.000				.625					---	.625								6.062	5.000			2.250	8.750	3.375	10.000
	4.000	3"-12 x 4.000	4"-12 x 4.000	3 3/4"-12 x 4.000	3 3/4"-12 x 7.500	4.749	---	1.000						---		3.375				.750					.625	---								---	---			2.250	8.750	3.375	10.000

NEWA DESIGN

4.27

FILE: 4.27_LH27S2.dwg REV: 02/09/2010

27650 Groesbeck Hwy • Roseville, MI 48066-2759 • Phone 586.775.7211 • Fax 586.775.4545 • Toll Free 800.526.7968 • e-mail: sales@peninsularcylinders.com • www.peninsularcylinders.com

"PUSH" & "PULL" Force Charts - Hydraulic Cylinders

for Peninsular - Series LH - Low-Pressure, NFPA Hydraulic Cylinders

"PUSH" (EXTENDED STROKE) CYLINDER FORCES IN POUNDS

Cylinder Bore Size	Hydraulic Working Line Pressure (PSI)									Line Pressure ←
	150	200	300	400	600	800	1000	1250	1500	
1 1/2	265	353	530	707	1060	1414	1767	2209	2651	
2	471	628	942	1257	1885	2513	3142	3927	4712	
2 1/2	736	982	1473	1964	2945	3927	4909			
3 1/4	1244	1659	2489	3318	4977	6637	8296			
4	1885	2513	3770	5027	7540	10053	12566			
5	2945	3927	5891	7854	11781	15708				
6	4241	5655	8482	11310	16965	22620				

Note: "Push" Forces in Pounds = (Cylinder Bore Diameter)^2 x .7854 x Line Pressure

"PULL" (RETRACTED STROKE) CYLINDER FORCES IN POUNDS

Cylinder Bore Size	Cylinder Rod DIA	Hydraulic Working Line Pressure (PSI)									Line Pressure ←
		150	200	300	400	600	800	1000	1250	1500	
1 1/2	5/8	219	292	438	584	876	1168	1460	1825	2191	
	1	147	196	295	393	589	785	982	1227	1473	
2	5/8	425	567	850	1134	1701	2268	2835	3544	4252	
	1	353	471	707	942	1414	1885	2356	2945	3534	
	1 3/8	249	331	497	663	994	1325	1657	2071	2485	
2 1/2	5/8	690	920	1381	1841	2761	3682	4602			
	1	619	825	1237	1649	2474	3299	4123			
	1 3/8	514	685	1027	1370	2054	2739	3424			
	1 3/4	376	501	751	1001	1502	2003	2503			
3 1/4	1	1127	1502	2253	3004	4506	6008	7510			
	1 3/8	1022	1362	2043	2724	4087	5449	6811			
	1 3/4	884	1178	1767	2356	3534	4712	5891			
	2	773	1031	1546	2062	3093	4123	5154			
4	1	1767	2356	3534	4712	7069	9425	11781			
	1 3/8	1662	2216	3324	4433	6649	8865	11082			
	1 3/4	1524	2032	3048	4064	6097	8129	10161			
	2	1414	1885	2827	3770	5655	7540	9425			
	2 1/2	1149	1532	2297	3063	4595	6126	7658			
5	1	2827	3770	5655	7540	11310	15080				
	1 3/8	2723	3630	5445	7260	10890	14520				
	1 3/4	2584	3446	5169	6892	10338	13784				
	2	2474	3299	4948	6597	9896	13195				
	2 1/2	2209	2945	4418	5891	8836	11781				
	3	1885	2513	3770	5027	7540	10053				
	3 1/2	1502	2003	3004	4006	6008	8011				
6	1 3/8	4018	5358	8037	10716	16074	21432				
	1 3/4	3880	5174	7761	10348	15521	20695				
	2	3770	5027	7540	10053	15080	20106				
	2 1/2	3505	4673	7010	9346	14019	18693				
	3	3181	4241	6362	8482	12723	16965				
	3 1/2	2798	3731	5596	7461	11192	14923				
	4	2356	3142	4712	6283	9425	12566				

Note: "Pull" Forces in Pounds = (Cylinder Bore Diameter)^2 - (Cylinder Rod Diameter)^2 x .7854 x Line Pressure

Rev. 2/9/2010

PENINSULAR®
CYLINDER CO.

Section 5

Table of Contents

Model IMH - *METRIC, Heavy Duty Steel Air Cylinders*

(ISO 6431 /VDMA 24562 Interchangeable)

Our Blue Model IMH - FAB Brochure - contains information about :

- *FEATURES, ADVANTAGES & BENEFITS of the Model IMH Air Cylinder*
- *HOW TO ORDER the Model IMH METRIC Air Cylinder*

Model IMH - Air Cylinder Dimensional Data

Page 5.00 IMH 0
No Mount
Single Rod
Available for Front or Rear Flush Mounts (MX0)

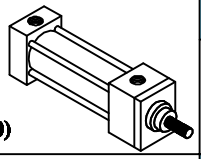

Page 5.03 IMH 3
Detachable
Rear
Clevis (MP2)

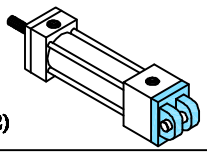

Page 5.04 IMH 4
Detachable
Front
Flange (MF1)

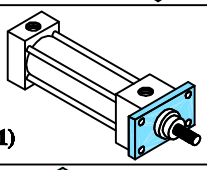

Page 5.05 IMH 5
Detachable
Rear
Flange (MF2)

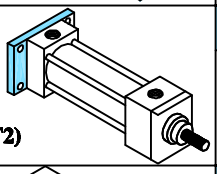

Page 5.06 IMH 6
Center
Trunnion (MT4)

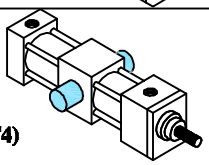

Page 5.08 IMH 8
Head
Tie Rod
Extended (MX3)

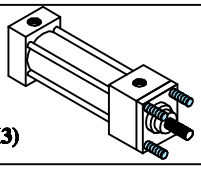

Page 5.11 IMH 11
Cap
Tie Rod
Extended (MX2)

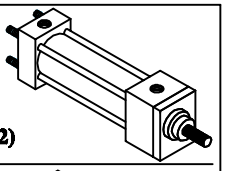

Page 5.12 IMH 12
Head & Cap
Tie Rod
Extended (MX1)

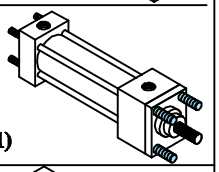

Page 5.13 IMH 13
Detachable
Front
Angle Foot (MS1)

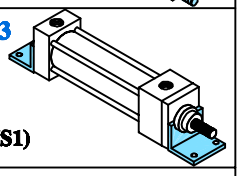

Page 5.21 IMH 21
Cap
Detachable
Eye (MP4)

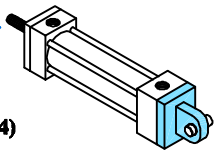

Page 5.30 IMH 30
Cap
Detachable
Spherical Eye (MP6)

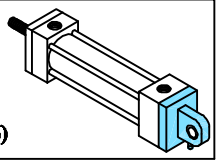

Pages 5.31 & 5.32
Cylinder "Push" & "Pull" Force Charts:
(use to select the correct cylinder Bore Size)

www.peninsularcylinders.com

1-800-526-7968

27650 Groesbeck Highway * Roseville, Michigan 48066-2759

(586) 775-7211 * (586) 775-4545 fax * email: sales@peninsularcylinders.com

NO MOUNT

Peninsular
Mounting Style: IMH 0

Heavy Duty Steel Air Cylinder • METRIC (DETACHABLE MOUNTINGS)

FOR BORE SIZES UP TO 1000 mm CALL PENINSULAR.
FOR ADDITIONAL ROD SIZES AVAILABLE CALL PENINSULAR.
FOR OPTIONAL ROD THREADS CALL PENINSULAR.
FOR OPTIONAL PORT SIZES CALL PENINSULAR.

ISO 15552

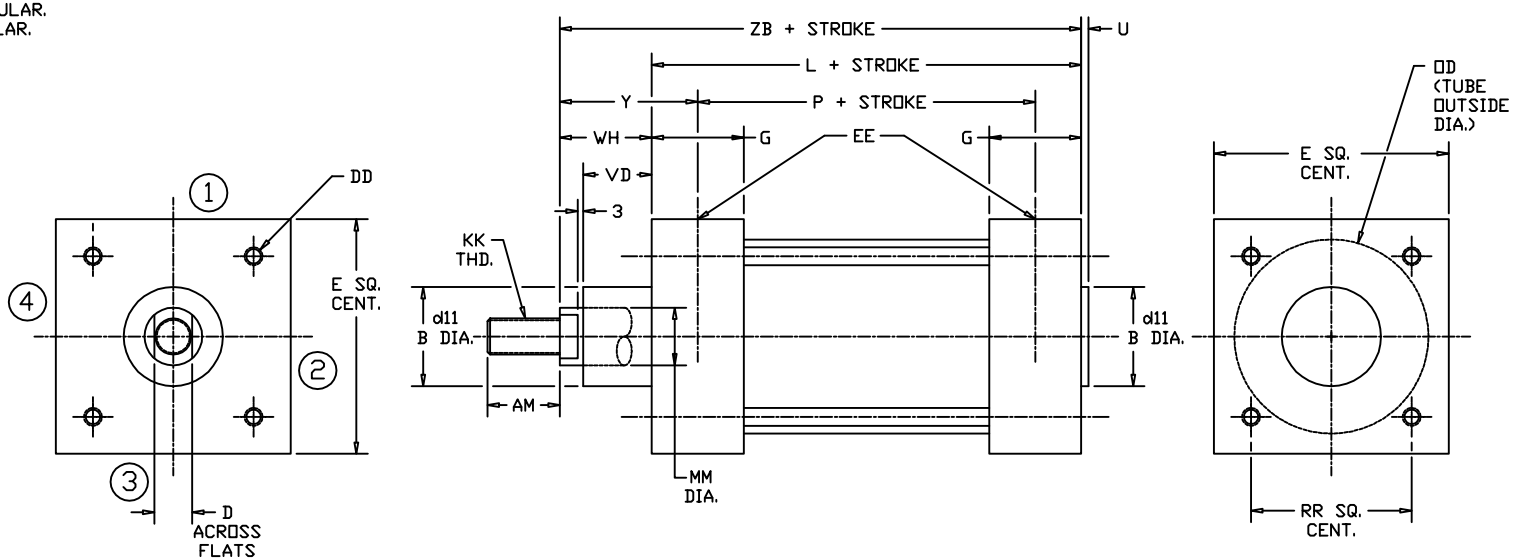

BORE	Ø ROD	STANDARD MALE ROD THREAD																	
								MAX.		MAX.								MIN.	
	MM	KK	AM	B	d11	D	DD	E	EE	G	L	OD	P	RR	U	VD	WH	Y	ZB
32	12	M10 x 1.25	22	30	+0.13 −0.06	10	M6 x 1.0	50	1/8	35	94	38.1	68	32.5	4	20	26	39	120
40	16	M12 x 1.25	24	35		13	M6 x 1.0	58	1/4	39	105	44.4	77	38	4	22	30	44	135
50	20	M16 x 1.5	32	40	+0.16	16	M8 x 1.25	70	1/4	39	106	57.1	78	46.5	4	29	37	51	143
63	20	M16 x 1.5	32	45	−0.08	16	M8 x 1.25	85	3/8	46	121	69.9	89	56.5	4	29	37	53	158
80	25	M20 x 1.5	40	45		21	M10 x 1.5	105	3/8	48	128	88.9	96	72	4	35	46	62	174
100	32	M20 x 1.5	40	55		21	M10 x 1.5	130	1/2	51	138	108.0	102	89	4	38	51	69	189
125	32	M27 x 2.0	54	60	+0.19	27	M12 x 1.75	157	1/2	62	160	133.3	124	110	6	50	65	83	225
160	40	M36 x 2.0	72	65	−0.10	36	M16 x 2.0	195	3/4	70	180	158.8	130	140	6	60	80	105	260
200	40	M36 x 2.0	72	75		36	M16 x 2.0	238	3/4	70	180	212.7	130	175	6	70	95	120	275
250	50	M42 x 2.0	84	90	+0.22	46	M20 x 2.5	290	1	70	200	266.7	138	220	10	80	105	136	305
320	50	M48 x 2.0	96	110	−0.12	46	M24 x 3.0	353	1	75	220	317.5	158	270	10	90	120	151	340

NEVA DESIGN

5.00

FILE: 5.00_IMH00S2.dwg REV: 09-25-07

27650 Groesbeck Hwy • Roseville, MI 48066-2759 • Phone 586.775.7211 • Fax 586.775.4545 • Toll Free 800.526.7968 • e-mail: sales@peninsularcylinders.com • www.peninsularcylinders.com

DETACHABLE REAR CLEVIS

ISO Mounting Style IMH 3

PENINSULAR® CYLINDER COMPANY

Medium–Heavy Duty
Steel Air Cylinder

NOTE:
For bore sizes up to 1000 mm call Peninsular.
For additional rod sizes available call Peninsular.
For optional rod threads call Peninsular.
* For in port mounted proximity switches, ports and cushions refer to the ordering guide.
U.S. patent numbers: 4,726,282 and D295,753.

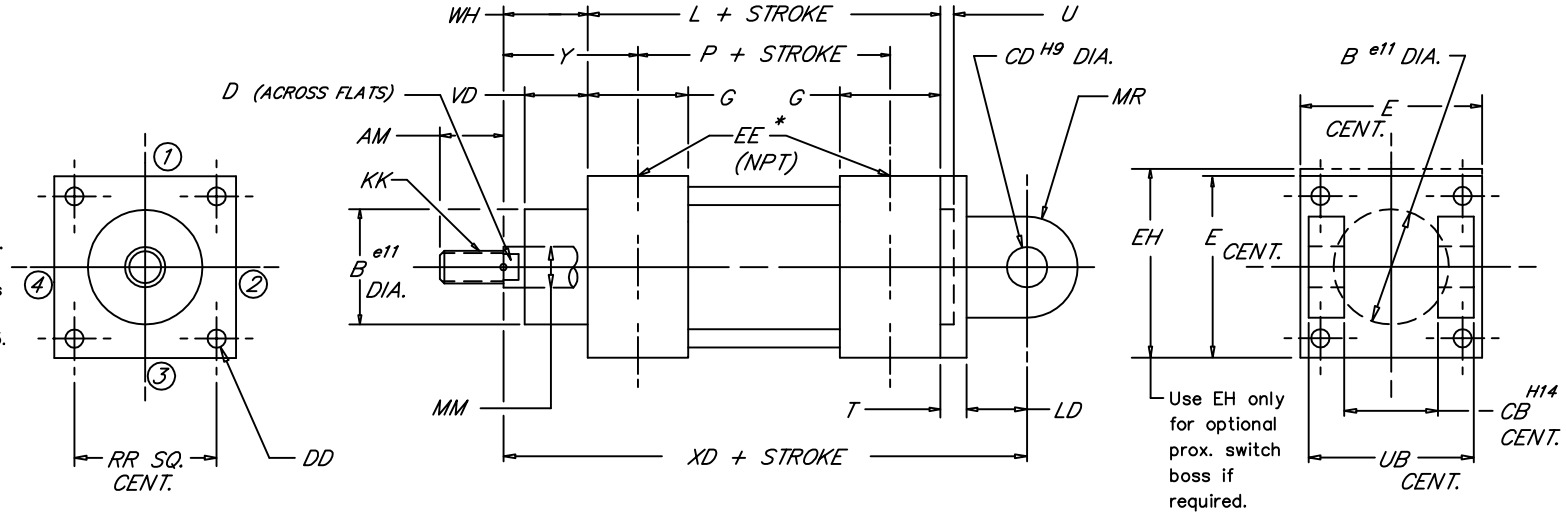

5.03

BORE	ROD DIA. MM	STANDARD MALE ROD THREAD KK	AM	B	CB	CD	D	DD	E	EE	EH MAX.	G	L MAX.	LD	MR	P	RR	T	U	UB	VD	WH	XD	Y
32	12	M10 X 1.25	22	30	26	10	10	M6	50	1/8	62.7	35	94	12	11	68	32.5	10	4	45	20	26	142	39
40	16	M12 X 1.25	24	35	28	12	13	M6	58	1/4	62.7	39	105	15	13	77	38	10	4	52	22	30	160	44
50	20	M16 X 1.5	32	40	32	12	16	M8	70	1/4	72.1	39	106	15	13	78	46.5	12	4	60	29	37	170	51
63	20	M16 X 1.5	32	45	40	16	16	M8	85	3/8	80.3	46	121	20	17	89	56.5	12	4	70	29	37	190	53
80	25	M20 X 1.5	40	45	50	16	21	M10	105	3/8	94.5	48	128	20	17	96	72	16	4	90	35	46	210	62
100	32	M20 X 1.5	40	55	60	20	21	M10	130	1/2	114.6	51	138	25	21	102	89	16	4	110	38	51	230	69
125	32	M27 X 2.0	54	60	70	25	27	M12	157	1/2	141.5	62	160	30	26	124	110	20	6	130	50	65	275	83
160	40	M36 X 2.0	72	65	90	30	36	M16	195	3/4	165.1	70	180	35	31	130	140	20	6	170	60	80	315	105
200	40	M36 X 2.0	72	75	90	30	36	M16	238	3/4	238	70	180	35	31	130	175	25	6	170	70	95	335	120
250	50	M42 X 2.0	84	90	110	40	46	M20	290	1	290	70	200	45	41	138	220	25	10	200	80	105	375	136
320	50	M48 X 2.0	96	110	120	45	46	M24	353	1	353	75	220	50	46	158	270	30	10	220	90	120	420	151

METRIC

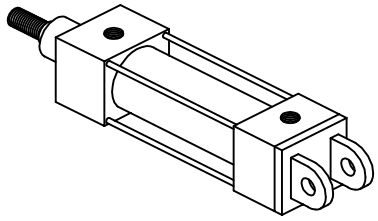

VDMA 24–562
NAAMS
DIN ISO 6431
(MP2)

FILE: 5.03_IMH03S2.dwg REV: 02/09/2010

27650 Groesbeck Hwy • Roseville, MI 48066–2759 • Phone 586.775.7211 • Fax 586.775.4545 • Toll Free 800.526.7968 • e-mail: sales@peninsularcylinders.com • www.peninsularcylinders.com

DETACHABLE FRONT FLANGE

ISO Mounting Style IMH 4

PENINSULAR® CYLINDER COMPANY

Medium–Heavy Duty
Steel Air Cylinder

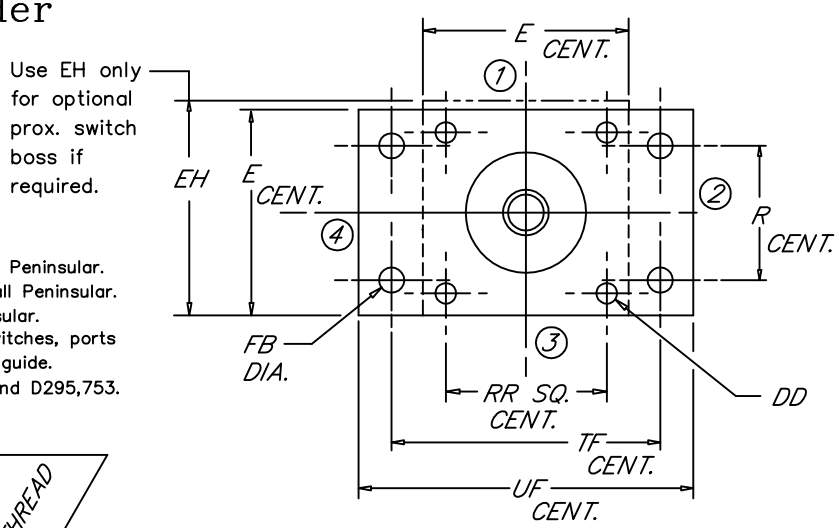

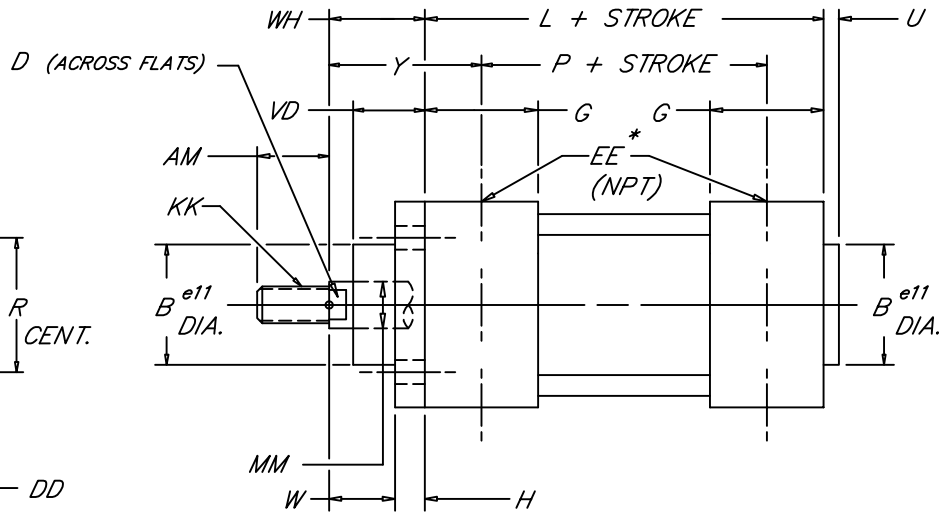

NOTE:
For bore sizes up to 1000 mm call Peninsular.
For additional rod sizes available call Peninsular.
For optional rod threads call Peninsular.
* For in port mounted proximity switches, ports and cushions refer to the ordering guide.
U.S. patent numbers: 4,726,282 and D295,753.

5.04

BORE	ROD DIA. MM	STANDARD MALE ROD THREAD KK	AM	B	D	DD	E MAX.	EE	EH	FB	G	H	L MAX.	P	R	RR	TF	U	UF	VD	W	WH	Y
32	12	M10 X 1.25	22	30	10	M6	50	1/8	62.7	7	35	10	94	68	32	32.5	64	4	86	20	16	26	39
40	16	M12 X 1.25	24	35	13	M6	58	1/4	62.7	9	39	10	105	77	36	38	72	4	96	22	20	30	44
50	20	M16 X 1.5	32	40	16	M8	70	1/4	72.1	9	39	12	106	78	45	46.5	90	4	115	29	25	37	51
63	20	M16 X 1.5	32	45	16	M8	85	3/8	80.3	9	46	12	121	89	50	56.5	100	4	130	29	25	37	53
80	25	M20 X 1.5	40	45	21	M10	105	3/8	94.5	12	48	16	128	96	63	72	126	4	165	35	30	46	62
100	32	M20 X 1.5	40	55	21	M10	130	1/2	114.6	14	51	16	138	102	75	89	150	4	187	38	35	51	69
125	32	M27 X 2.0	54	60	27	M12	157	1/2	141.5	16	62	20	160	124	90	110	180	6	224	50	45	65	83
160	40	M36 X 2.0	72	65	36	M16	195	3/4	165.1	18	70	20	180	130	115	140	230	6	280	60	60	80	105
200	40	M36 X 2.0	72	75	36	M16	238	3/4	238	22	70	25	180	130	135	175	270	6	320	70	70	95	120
250	50	M42 X 2.0	84	90	46	M20	290	1	290	26	70	25	200	138	165	220	330	10	395	80	80	105	136
320	50	M48 X 2.0	96	110	46	M24	353	1	353	33	75	30	220	158	200	270	400	10	475	90	90	120	151

NEVA DESIGN

METRIC

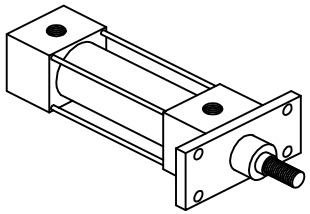

VDMA 24–562
NAAMS
DIN ISO 6431
(MF1)

FILE: 5.04_IMH04S2.dwg REV: 02/09/2010

27650 Groesbeck Hwy • Roseville, MI 48066–2759 • Phone 586.775.7211 • Fax 586.775.4545 • Toll Free 800.526.7968 • e-mail: sales@peninsularcylinders.com • www.peninsularcylinders.com

DETACHABLE REAR FLANGE

ISO Mounting Style IMH 5

PENINSULAR® CYLINDER COMPANY

Medium–Heavy Duty
Steel Air Cylinder

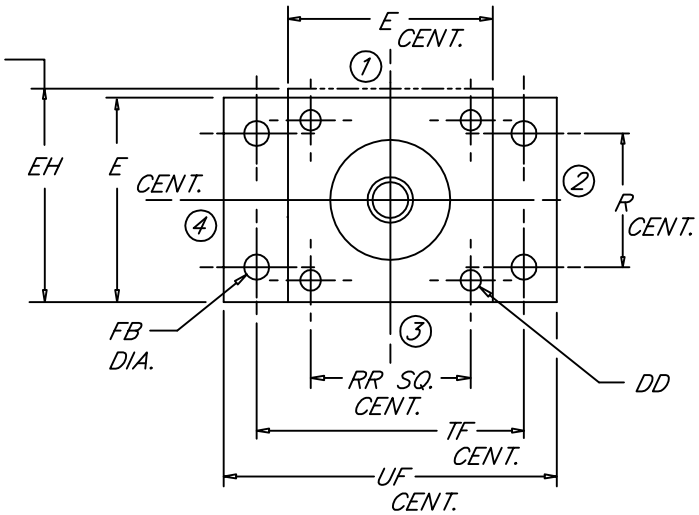

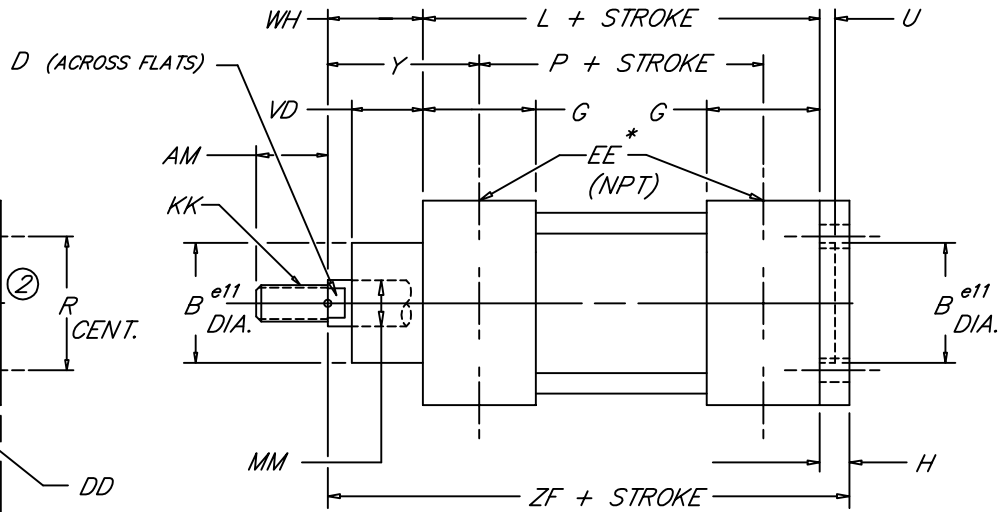

NOTE:
For bore sizes up to 1000 mm call Peninsular.
For additional rod sizes available call Peninsular.
For optional rod threads call Peninsular.
* For in port mounted proximity switches, ports and cushions refer to the ordering guide.
U.S. patent numbers: 4,726,282 and D295,753.

5.05

BORE	ROD DIA. MM	STANDARD MALE ROD THREAD KK	AM	B	D	DD	E MAX.	EE	EH	FB	G	H MAX.	L	P	R	RR	TF	U	UF	VD	WH	Y	ZF
32	12	M10 X 1.25	22	30	10	M6	50	1/8	62.7	7	35	10	94	68	32	32.5	64	4	86	20	26	39	130
40	16	M12 X 1.25	24	35	13	M6	58	1/4	62.7	9	39	10	105	77	36	38	72	4	96	22	30	44	145
50	20	M16 X 1.5	32	40	16	M8	70	1/4	72.1	9	39	12	106	78	45	46.5	90	4	115	29	37	51	155
63	20	M16 X 1.5	32	45	16	M8	85	3/8	80.3	9	46	12	121	89	50	56.5	100	4	130	29	37	53	170
80	25	M20 X 1.5	40	45	21	M10	105	3/8	94.5	12	48	16	128	96	63	72	126	4	165	35	46	62	190
100	32	M20 X 1.5	40	55	21	M10	130	1/2	114.6	14	51	16	138	102	75	89	150	4	187	38	51	69	205
125	32	M27 X 2.0	54	60	27	M12	157	1/2	141.5	16	62	20	160	124	90	110	180	6	224	50	65	83	245
160	40	M36 X 2.0	72	65	36	M16	195	3/4	165.1	18	70	20	180	130	115	140	230	6	280	60	80	105	280
200	40	M36 X 2.0	72	75	36	M16	238	3/4	238	22	70	25	180	130	135	175	270	6	320	70	95	120	300
250	50	M42 X 2.0	84	90	46	M20	290	1	290	26	70	25	200	138	165	220	330	10	395	80	105	136	330
320	50	M48 X 2.0	96	110	46	M24	353	1	353	33	75	30	220	158	200	270	400	10	475	90	120	151	370

METRIC

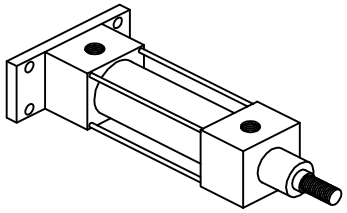

VDMA 24–562
NAAMS
DIN ISO 6431
(MF2)

FILE: 5.05_IMH05S2.dwg REV: 02/09/2010

27650 Groesbeck Hwy • Roseville, MI 48066–2759 • Phone 586.775.7211 • Fax 586.775.4545 • Toll Free 800.526.7968 • e-mail: sales@peninsularcylinders.com • www.peninsularcylinders.com

CENTER TRUNNION

ISO Mounting Style IMH 6

PENINSULAR® CYLINDER COMPANY

Medium–Heavy Duty
Steel Air Cylinder

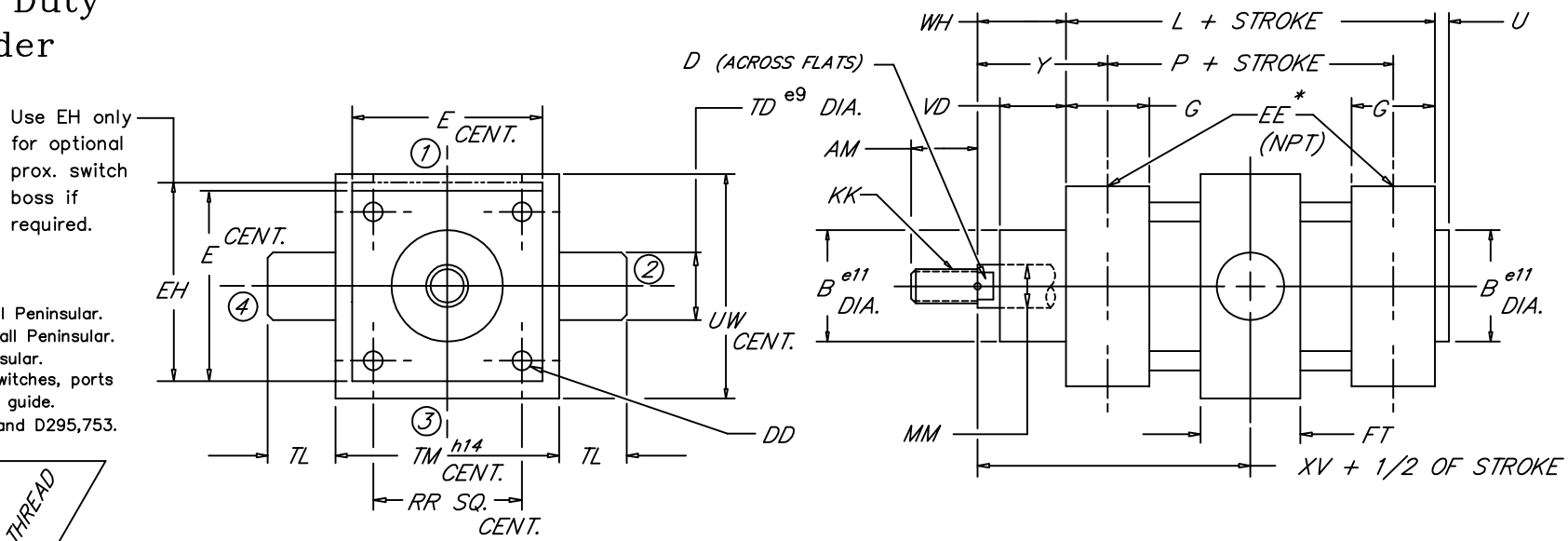

NOTE:
For bore sizes up to 1000 mm call Peninsular.
For additional rod sizes available call Peninsular.
For optional rod threads call Peninsular.
* For in port mounted proximity switches, ports and cushions refer to the ordering guide.
U.S. patent numbers: 4,726,282 and D295,753.

5.06

BORE	ROD DIA. MM	STANDARD MALE ROD THREAD KK	AM	B	D	DD	E	EE	EH	FT	G	L MAX.	P	RR	TD	TL	TM	U	UW	VD	WH	XV MAX.	Y
32	12	M10 X 1.25	22	30	10	M6	50	1/8	62.7	25	35	94	68	32.5	12	12	50	4	65	20	26	73.0	39
40	16	M12 X 1.25	24	35	13	M6	58	1/4	62.7	28	39	105	77	38	16	16	63	4	75	22	30	82.5	44
50	20	M16 X 1.5	32	40	16	M8	70	1/4	72.1	28	39	106	78	46.5	16	16	75	4	95	29	37	90.0	51
63	20	M16 X 1.5	32	45	16	M8	85	3/8	80.3	36	46	121	89	56.5	20	20	90	4	105	29	37	97.5	53
80	25	M20 X 1.5	40	45	21	M10	105	3/8	94.5	36	48	128	96	72	20	20	110	4	130	35	46	110.0	62
100	32	M20 X 1.5	40	55	21	M10	130	1/2	114.6	48	51	138	102	89	25	25	132	4	145	38	51	120.0	69
125	32	M27 X 2.0	54	60	27	M12	157	1/2	141.5	50	62	160	124	110	25	25	160	6	175	50	65	145.0	83
160	40	M36 X 2.0	72	65	36	M16	195	3/4	165.1	50	70	180	130	140	32	32	200	6	220	60	80	170.0	105
200	40	M36 X 2.0	72	75	36	M16	238	3/4	238	50	70	180	130	175	32	32	250	6	260	70	95	185.0	120
250	50	M42 X 2.0	84	90	46	M20	290	1	290	60	70	200	138	220	40	40	320	10	320	80	105	205.0	136
320	50	M48 X 2.0	96	110	46	M24	353	1	353	70	75	220	158	270	50	50	400	10	400	90	120	230.0	151

METRIC

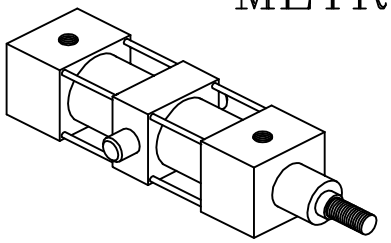

VDMA 24–562
NAAMS
DIN ISO 6431
(MT4)

FILE: 5.06_IMH06S2.dwg REV: 02/09/2010

27650 Groesbeck Hwy • Roseville, MI 48066–2759 • Phone 586.775.7211 • Fax 586.775.4545 • Toll Free 800.526.7968 • e-mail: sales@peninsularcylinders.com • www.peninsularcylinders.com

HEAD TIE ROD EXTENDED

Peninsular
Mounting Style: IMH 08

Heavy Duty Steel Air Cylinder • METRIC (DETACHABLE MOUNTINGS)

FOR BORE SIZES UP TO 1000 mm CALL PENINSULAR.
FOR ADDITIONAL ROD SIZES AVAILABLE CALL PENINSULAR.
FOR OPTIONAL ROD THREADS CALL PENINSULAR.
FOR OPTIONAL PORT SIZES CALL PENINSULAR.

ISO 15552

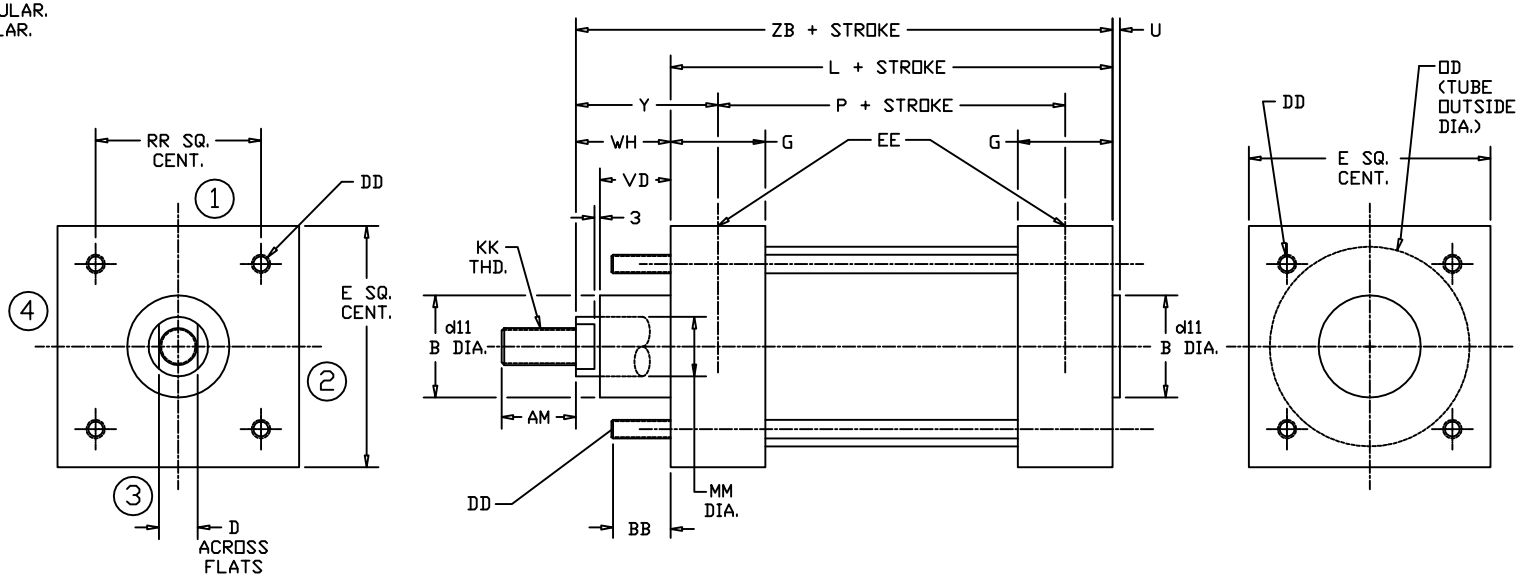

5.08

BORE	ø ROD	STANDARD MALE ROD THREAD																		
	MM	KK	AM	B	d11	BB	D	DD	E MAX.	EE	G MAX.	L	OD	P	RR	U	VD	WH	Y MIN.	ZB
32	12	M10 × 1.25	22	30	+0.13 −0.06	17	10	M6 × 1.0	50	1/8	35	94	38.1	68	32.5	4	20	26	39	120
40	16	M12 × 1.25	24	35		17	13	M6 × 1.0	58	1/4	39	105	44.4	77	38	4	22	30	44	135
50	20	M16 × 1.5	32	40	+0.16	23	16	M8 × 1.25	70	1/4	39	106	57.1	78	46.5	4	29	37	51	143
63	20	M16 × 1.5	32	45	−0.08	23	16	M8 × 1.25	85	3/8	46	121	69.9	89	56.5	4	29	37	53	158
80	25	M20 × 1.5	40	45		28	21	M10 × 1.5	105	3/8	48	128	88.9	96	72	4	35	46	62	174
100	32	M20 × 1.5	40	55		28	21	M10 × 1.5	130	1/2	51	138	108.0	102	89	4	38	51	69	189
125	32	M27 × 2.0	54	60	+0.19	34	27	M12 × 1.75	157	1/2	62	160	133.3	124	110	6	50	65	83	225
160	40	M36 × 2.0	72	65	−0.10	42	36	M16 × 2.0	195	3/4	70	180	158.8	130	140	6	60	80	105	260
200	40	M36 × 2.0	72	75		42	36	M16 × 2.0	238	3/4	70	180	212.7	130	175	6	70	95	120	275
250	50	M42 × 2.0	84	90	+0.22	52	46	M20 × 2.5	290	1	70	200	266.7	138	220	10	80	105	136	305
320	50	M48 × 2.0	96	110	−0.12	52	46	M24 × 3.0	353	1	75	220	317.5	158	270	10	90	120	151	340

FILE: 5.08_IMH08S2.dwg REV: 02/09/2010

27650 Groesbeck Hwy • Roseville, MI 48066-2759 • Phone 586.775.7211 • Fax 586.775.4545 • Toll Free 800.526.7968 • e-mail: sales@peninsularcylinders.com • www.peninsularcylinders.com

CAP TIE ROD EXTENDED

Peninsular
Mounting Style: IMH 11

Heavy Duty Steel Air Cylinder • METRIC (DETACHABLE MOUNTINGS)

FOR BORE SIZES UP TO 1000 mm CALL PENINSULAR.
FOR ADDITIONAL ROD SIZES AVAILABLE CALL PENINSULAR.
FOR OPTIONAL ROD THREADS CALL PENINSULAR.
FOR OPTIONAL PORT SIZES CALL PENINSULAR.

ISO 15552

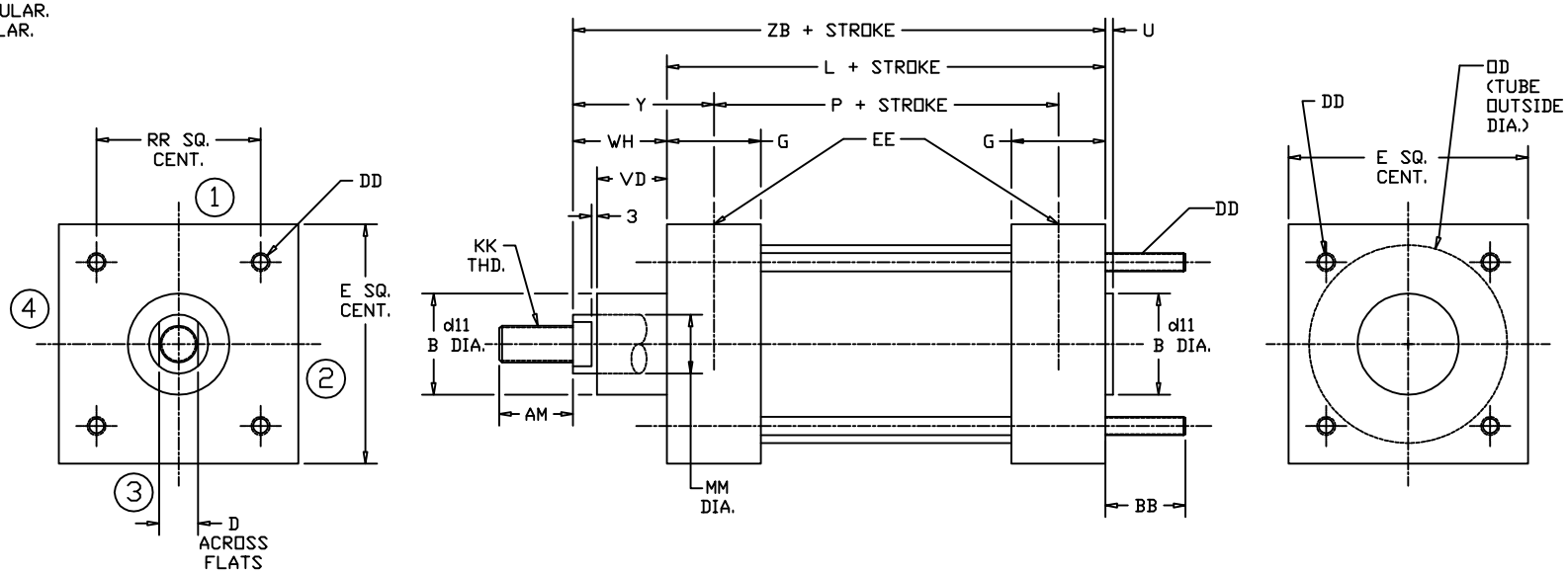

BORE	Ø ROD MM	STANDARD LONG MALE ROD THREAD KK	AM	B	d11	BB	D	DD	E (MAX.)	EE	G (MAX.)	L	OD	P	RR	U	VD	WH	Y (MIN.)	ZB
32	12	M10 × 1.25	22	30	+0.13 −0.06	17	10	M6 × 1.0	50	1/8	35	94	38.1	68	32.5	4	20	26	39	120
40	16	M12 × 1.25	24	35		17	13	M6 × 1.0	58	1/4	39	105	44.4	77	38	4	22	30	44	135
50	20	M16 × 1.5	32	40	+0.16	23	16	M8 × 1.25	70	1/4	39	106	57.1	78	46.5	4	29	37	51	143
63	20	M16 × 1.5	32	45	−0.08	23	16	M8 × 1.25	85	3/8	46	121	69.9	89	56.5	4	29	37	53	158
80	25	M20 × 1.5	40	45		28	21	M10 × 1.5	105	3/8	48	128	88.9	96	72	4	35	46	62	174
100	32	M20 × 1.5	40	55		28	21	M10 × 1.5	130	1/2	51	138	108.0	102	89	4	38	51	69	189
125	32	M27 × 2.0	54	60	+0.19	34	27	M12 × 1.75	157	1/2	62	160	133.3	124	110	6	50	65	83	225
160	40	M36 × 2.0	72	65	−0.10	42	36	M16 × 2.0	195	3/4	70	180	158.8	130	140	6	60	80	105	260
200	40	M36 × 2.0	72	75		42	36	M16 × 2.0	238	3/4	70	180	212.7	130	175	6	70	95	120	275
250	50	M42 × 2.0	84	90	+0.22	52	46	M20 × 2.5	290	1	70	200	266.7	138	220	10	80	105	136	305
320	50	M48 × 2.0	96	110	−0.12	52	46	M24 × 3.0	353	1	75	220	317.5	158	270	10	90	120	151	340

27650 Groesbeck Hwy • Roseville, MI 48066-2759 • Phone 586.775.7211 • Fax 586.775.4545 • Toll Free 800.526.7968 • e-mail: sales@peninsularcylinders.com • www.peninsularcylinders.com

HEAD & CAP TIE ROD EXTENDED

Peninsular Mounting Style: IMH 12

Heavy Duty Steel Air Cylinder • METRIC (DETACHABLE MOUNTINGS)

FOR BORE SIZES UP TO 1000 mm CALL PENINSULAR.
FOR ADDITIONAL ROD SIZES AVAILABLE CALL PENINSULAR.
FOR OPTIONAL ROD THREADS CALL PENINSULAR.
FOR OPTIONAL PORT SIZES CALL PENINSULAR.

ISO 15552

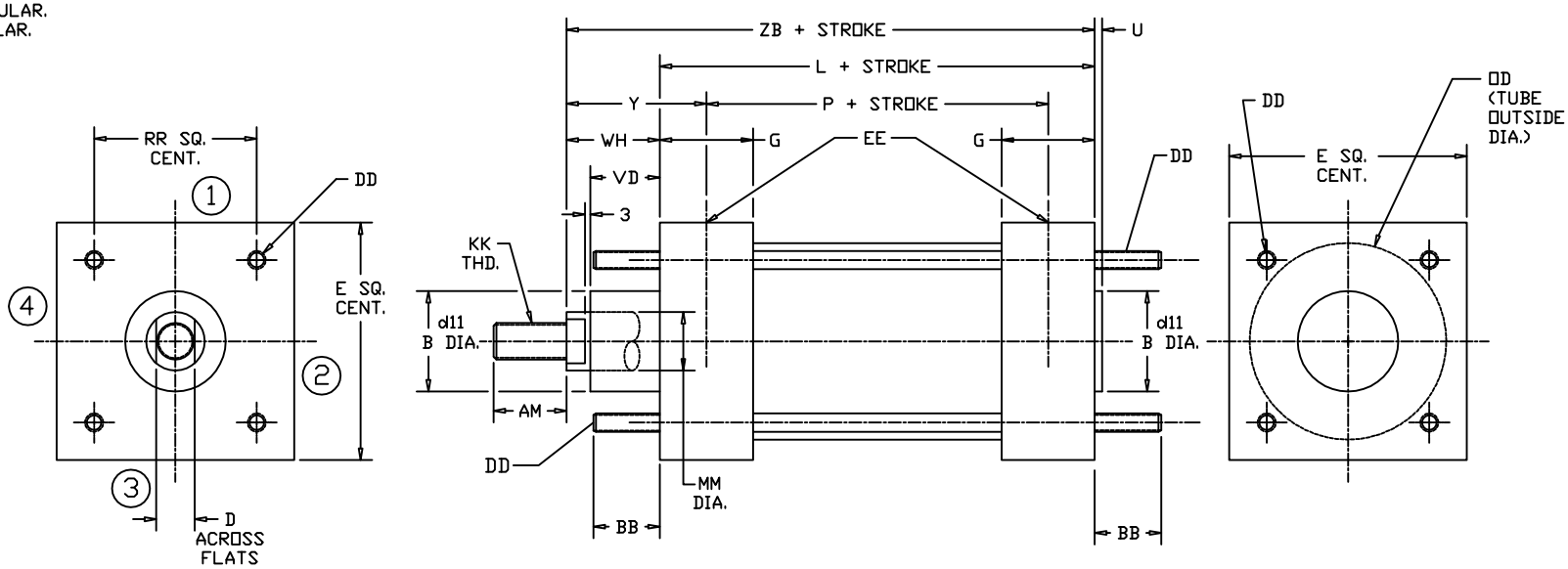

5.12

BORE	ø ROD	STANDARD LONG MALE ROD THREAD							MAX.		MAX.								MIN.	
	MM	KK	AM	B	d11	BB	D	DD	E	EE	G	L	OD	P	RR	U	VD	WH	Y	ZB
32	12	M10 × 1.25	22	30	+0.13 −0.06	17	10	M6 × 1.0	50	1/8	35	94	38.1	68	32.5	4	20	26	39	120
40	16	M12 × 1.25	24	35		17	13	M6 × 1.0	58	1/4	39	105	44.4	77	38	4	22	30	44	135
50	20	M16 × 1.5	32	40	+0.16	23	16	M8 × 1.25	70	1/4	39	106	57.1	78	46.5	4	29	37	51	143
63	20	M16 × 1.5	32	45	−0.08	23	16	M8 × 1.25	85	3/8	46	121	69.9	89	56.5	4	29	37	53	158
80	25	M20 × 1.5	40	45		28	21	M10 × 1.5	105	3/8	48	128	88.9	96	72	4	35	46	62	174
100	32	M20 × 1.5	40	55		28	21	M10 × 1.5	130	1/2	51	138	108.0	102	89	4	38	51	69	189
125	32	M27 × 2.0	54	60	+0.19	34	27	M12 × 1.75	157	1/2	62	160	133.3	124	110	6	50	65	83	225
160	40	M36 × 2.0	72	65	−0.10	42	36	M16 × 2.0	195	3/4	70	180	158.8	130	140	6	60	80	105	260
200	40	M36 × 2.0	72	75		42	36	M16 × 2.0	238	3/4	70	180	212.7	130	175	6	70	95	120	275
250	50	M42 × 2.0	84	90	+0.22	52	46	M20 × 2.5	290	1	70	200	266.7	138	220	10	80	105	136	305
320	50	M48 × 2.0	96	110	−0.12	52	46	M24 × 3.0	353	1	75	220	317.5	158	270	10	90	120	151	340

FILE: 5.12_IMH12S2.dwg REV: 02/09/2010

27650 Groesbeck Hwy • Roseville, MI 48066-2759 • Phone 586.775.7211 • Fax 586.775.4545 • Toll Free 800.526.7968 • e-mail: sales@peninsularcylinders.com • www.peninsularcylinders.com

DETACHABLE FRONT ANGLE FOOT ISO Mounting Style IMH 13

PENINSULAR® CYLINDER COMPANY

Medium–Heavy Duty
Steel Air Cylinder

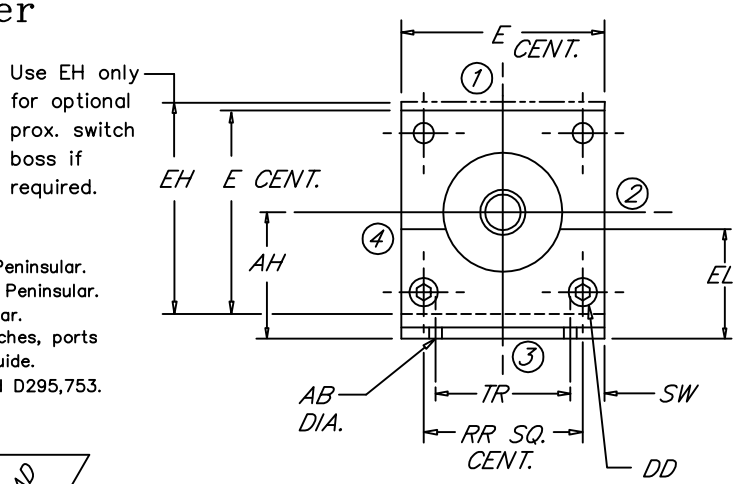

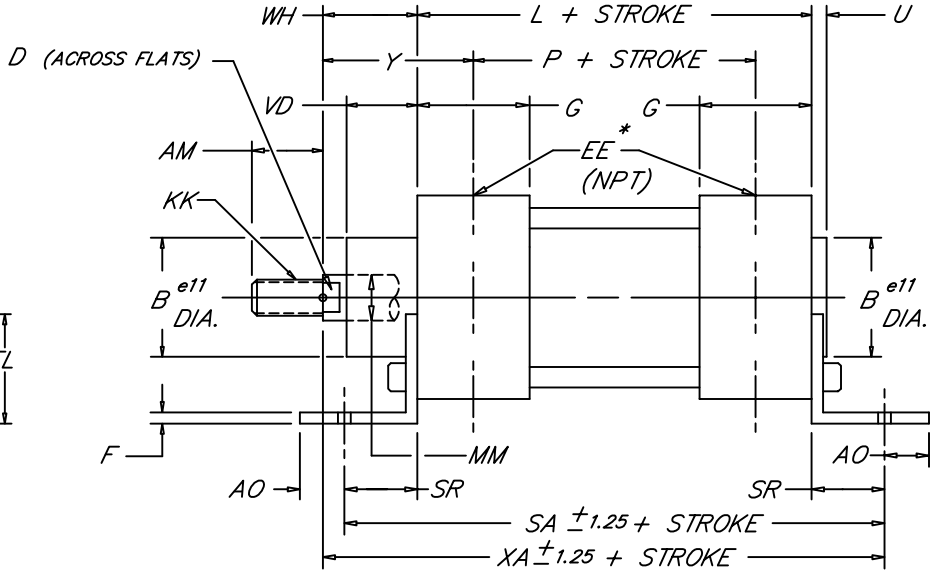

NOTE:
For bore sizes up to 1000 mm call Peninsular.
For additional rod sizes available call Peninsular.
For optional rod threads call Peninsular.
* For in port mounted proximity switches, ports and cushions refer to the ordering guide.
U.S. patent numbers: 4,726,282 and D295,753.

5.13

BORE	ROD DIA. MM	STANDARD MALE ROD THREAD KK	AM	AB	AH	AO	B	D	DD	E MAX.	EE	EH	EL	F	G	L MAX.	P	RR	SA	SR	SW	TR	U	VD	WH	XA	Y
32	12	M10 X 1.25	22	7	32	20.4	30	10	M6	50	1/8	62.7	32	5	35	94	68	32.5	142	24	9.0	32	4	20	26	144	39
40	16	M12 X 1.25	24	10	36	16.4	35	13	M6	58	1/4	62.7	36	5	39	105	77	38	161	28	11.0	36	4	22	30	163	44
50	20	M16 X 1.5	32	10	45	18.8	40	16	M8	70	1/4	72.1	45	6	39	106	78	46.5	170	32	12.5	45	4	29	37	175	51
63	20	M16 X 1.5	32	10	50	18.8	45	16	M8	85	3/8	80.3	50	6	46	121	89	56.5	185	32	17.5	50	4	29	37	190	53
80	25	M20 X 1.5	40	12	63	35.2	45	21	M10	105	3/8	94.5	63	8	48	128	96	72	210	41	21.0	63	4	35	46	215	62
100	32	M20 X 1.5	40	14.5	71	35.2	55	21	M10	130	1/2	114.6	71	8	51	138	102	89	220	41	27.5	75	4	38	51	230	69
125	32	M27 X 2.0	54	16.5	90	31.2	60	27	M12	157	1/2	141.5	90	11	62	160	124	110	250	45	33.5	90	6	50	65	270	83
160	40	M36 X 2.0	72	18.5	115	28.9	65	36	M16	195	3/4	165.1	115	13	70	180	130	140	300	60	40.0	115	6	60	80	320	105
200	40	M36 X 2.0	72	24	135	35	75	36	M16	238	3/4	238	135	13	70	180	130	175	320	70	51.5	135	6	70	95	345	120
250	50	M42 X 2.0	84	28	165	40	90	46	M20	290	1	290	165	13	70	200	138	220	350	75	62.5	165	10	80	105	380	136
320	50	M48 X 2.0	96	35	200	45	110	46	M24	353	1	353	200	13	75	220	158	270	390	85	76.5	200	10	90	120	425	151

METRIC

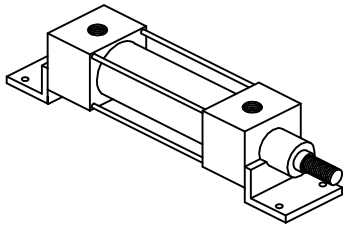

VDMA 24–562
NAAMS
DIN ISO 6431
(MS1)

FILE: 5.13_IMH13S2.dwg REV: 02/09/2010

27650 Groesbeck Hwy • Roseville, MI 48066–2759 • Phone 586.775.7211 • Fax 586.775.4545 • Toll Free 800.526.7968 • e-mail: sales@peninsularcylinders.com • www.peninsularcylinders.com

CAP DETACHABLE EYE

Peninsular
Mounting Style: IMH 21

Heavy Duty Steel Air Cylinder • METRIC (DETACHABLE MOUNTINGS)

FOR BORE SIZES UP TO 1000 mm CALL PENINSULAR.
FOR ADDITIONAL ROD SIZES AVAILABLE CALL PENINSULAR.
FOR OPTIONAL ROD THREADS CALL PENINSULAR.
FOR OPTIONAL PORT SIZES CALL PENINSULAR.

ISO 15552

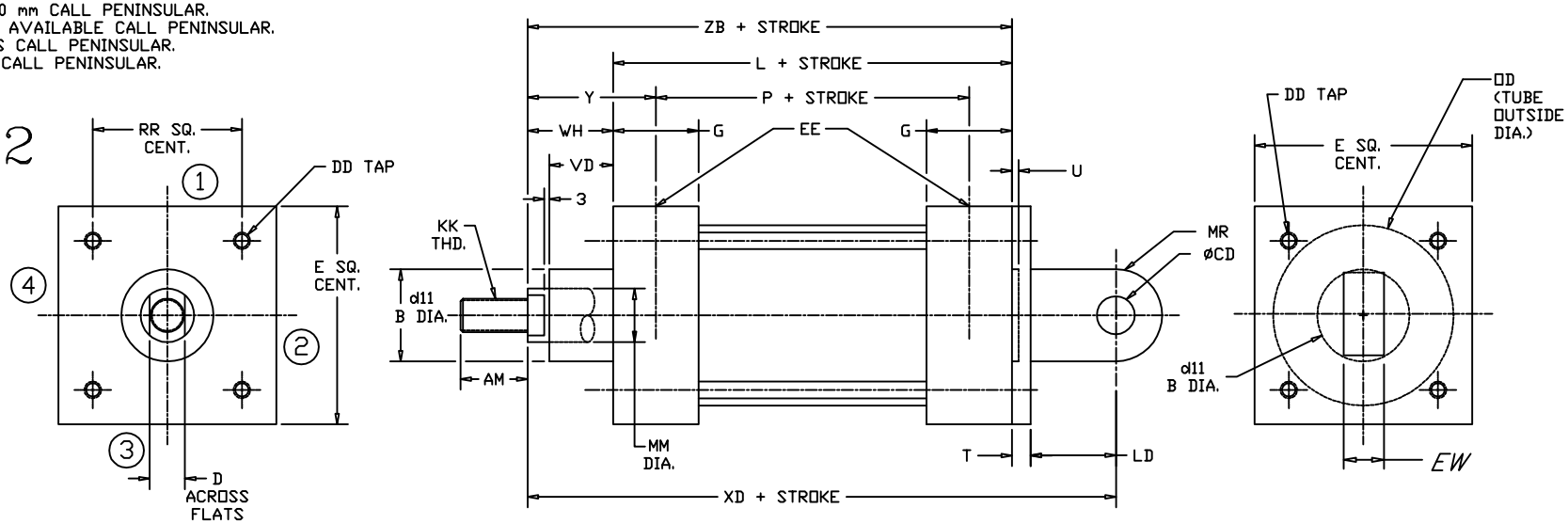

BORE	ø ROD	STANDARD MALE ROD THREAD							MAX.			MAX.			MAX.									MIN.	
	MM	KK	AM	B	d11	CD	D	DD	E	EW	EE	G	L	LD	MR	OD	P	RR	T	U	VD	WH	XD	Y	ZB
32	12	M10 x 1.25	22	30	+0.13 −0.06	10	10	M6 x 1.0	50	26	1/8	35	94	12	11	38.1	68	32.5	10	4	20	26	142	39	120
40	16	M12 x 1.25	24	35		12	13	M6 x 1.0	58	28	1/4	39	105	15	13	44.4	77	38	10	4	22	30	160	44	135
50	20	M16 x 1.5	32	40	+0.16	12	16	M8 x 1.25	70	32	1/4	39	106	15	13	57.1	78	46.5	12	4	29	37	170	51	143
63	20	M16 x 1.5	32	45	−0.08	16	16	M8 x 1.25	85	40	3/8	46	121	20	17	69.9	89	56.5	12	4	29	37	190	53	158
80	25	M20 x 1.5	40	45		16	21	M10 x 1.5	105	50	3/8	48	128	20	17	88.9	96	72	16	4	35	46	210	62	174
100	32	M20 x 1.5	40	55		20	21	M10 x 1.5	130	60	1/2	51	138	25	21	108.0	102	89	16	4	38	51	230	69	189
125	32	M27 x 2.0	54	60	+0.19	25	27	M12 x 1.75	157	70	1/2	62	160	30	26	133.3	124	110	20	6	50	65	275	83	225
160	40	M36 x 2.0	72	65	−0.10	30	36	M16 x 2.0	195	90	3/4	70	180	35	31	158.8	130	140	20	6	60	80	315	105	260
200	40	M36 x 2.0	72	75		30	36	M16 x 2.0	238	90	3/4	70	180	35	31	212.7	130	175	25	6	70	95	335	120	275
250	50	M42 x 2.0	84	90	+0.22	40	46	M20 x 2.5	290	110	1	70	200	45	41	266.7	138	220	25	10	80	105	375	136	305
320	50	M48 x 2.0	96	110	−0.12	45	46	M24 x 3.0	353	120	1	75	220	50	46	317.5	158	270	30	10	90	120	420	151	340

27650 Groesbeck Hwy • Roseville, MI 48066-2759 • Phone 586.775.7211 • Fax 586.775.4545 • Toll Free 800.526.7968 • e-mail: sales@peninsularcylinders.com • www.peninsularcylinders.com

DETACHABLE REAR CLEVIS

ISO Mounting Style IMH 24

PENINSULAR® CYLINDER COMPANY

Medium–Heavy Duty
Steel Air Cylinder

NOTE:
For bore sizes up to 1000 mm call Peninsular.
For additional rod sizes available call Peninsular.
For optional rod threads call Peninsular.
* For in port mounted proximity switches, ports and cushions refer to the ordering guide.
U.S. patent numbers: 4,726,282 and D295,753.

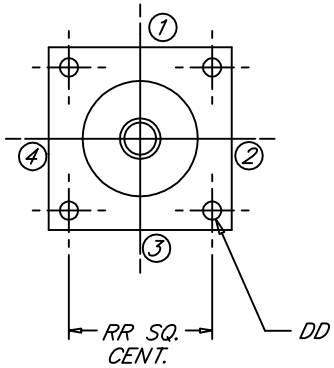

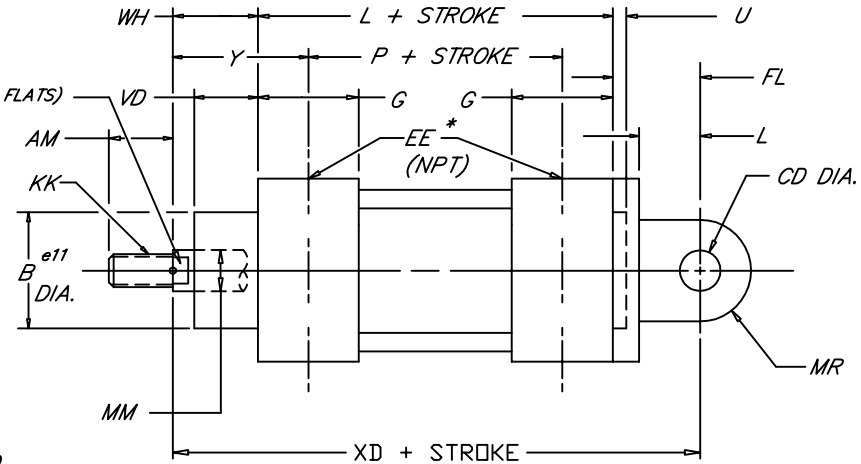

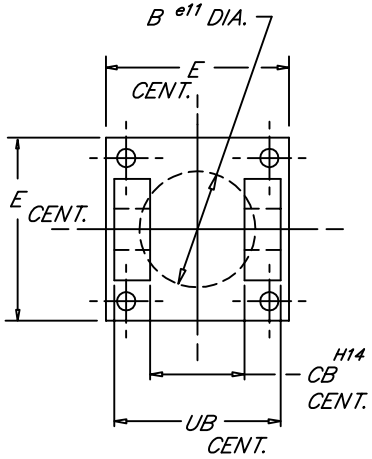

BORE	ROD DIA. MM	STANDARD MALE ROD THREAD KK	AM	B	CB	CD	D	DD	E MAX.	EE	FL	G	L MAX.	MR	P	RR	U	UB	VD	WH	XD	Y
32	12	M10 X 1.25	22	30	26	10	10	M6	50	1/8	22	35	94	11	68	32.5	4	45	20	26	142	39
40	16	M12 X 1.25	24	35	28	12	13	M6	58	1/4	25	39	105	13	77	38	4	52	22	30	160	44
50	20	M16 X 1.5	32	40	32	12	16	M8	70	1/4	27	39	106	13	78	46.5	4	60	29	37	170	51
63	20	M16 X 1.5	32	45	40	16	16	M8	85	3/8	32	46	121	17	89	56.5	4	70	29	37	190	53
80	25	M20 X 1.5	40	45	50	16	21	M10	105	3/8	36	48	128	17	96	72	4	90	35	46	210	62
100	32	M20 X 1.5	40	55	60	20	21	M10	130	1/2	41	51	138	21	102	89	4	110	38	51	230	69
125	32	M27 X 2.0	54	60	70	25	27	M12	157	1/2	50	62	160	26	124	110	6	130	50	65	275	83
160	40	M36 X 2.0	72	65	90	30	36	M16	195	3/4	55	70	180	31	130	140	6	170	60	80	315	105
200	40	M36 X 2.0	72	75	90	30	36	M16	238	3/4	60	70	180	31	130	175	6	170	70	95	335	120
250	50	M42 X 2.0	84	90	110	40	46	M20	290	1	70	70	200	41	138	220	10	200	80	105	375	136
320	50	M48 X 2.0	96	110	120	45	46	M24	353	1	80	75	220	46	158	270	10	220	90	120	420	151

METRIC

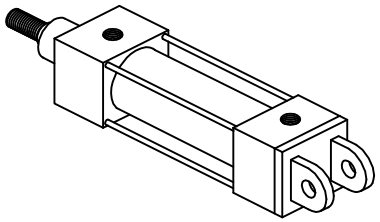

VDMA 24–562
NAAMS
DIN ISO 6431
(MP2)

FILE: 5.24_IMH24S2.dwg REV: 02/09/2010

27650 Groesbeck Hwy • Roseville, MI 48066–2759 • Phone 586.775.7211 • Fax 586.775.4545 • Toll Free 800.526.7968 • e–mail: sales@peninsularcylinders.com • www.peninsularcylinders.com

CAP DETACHABLE SPHERICAL EYE

Peninsular Mounting Style: IMH 30

Heavy Duty Steel Air Cylinder • METRIC (DETACHABLE MOUNTINGS)

FOR BORE SIZES UP TO 1000 mm CALL PENINSULAR.
FOR ADDITIONAL ROD SIZES AVAILABLE CALL PENINSULAR.
FOR OPTIONAL ROD THREADS CALL PENINSULAR.
FOR OPTIONAL PORT SIZES CALL PENINSULAR.

ISO 15552

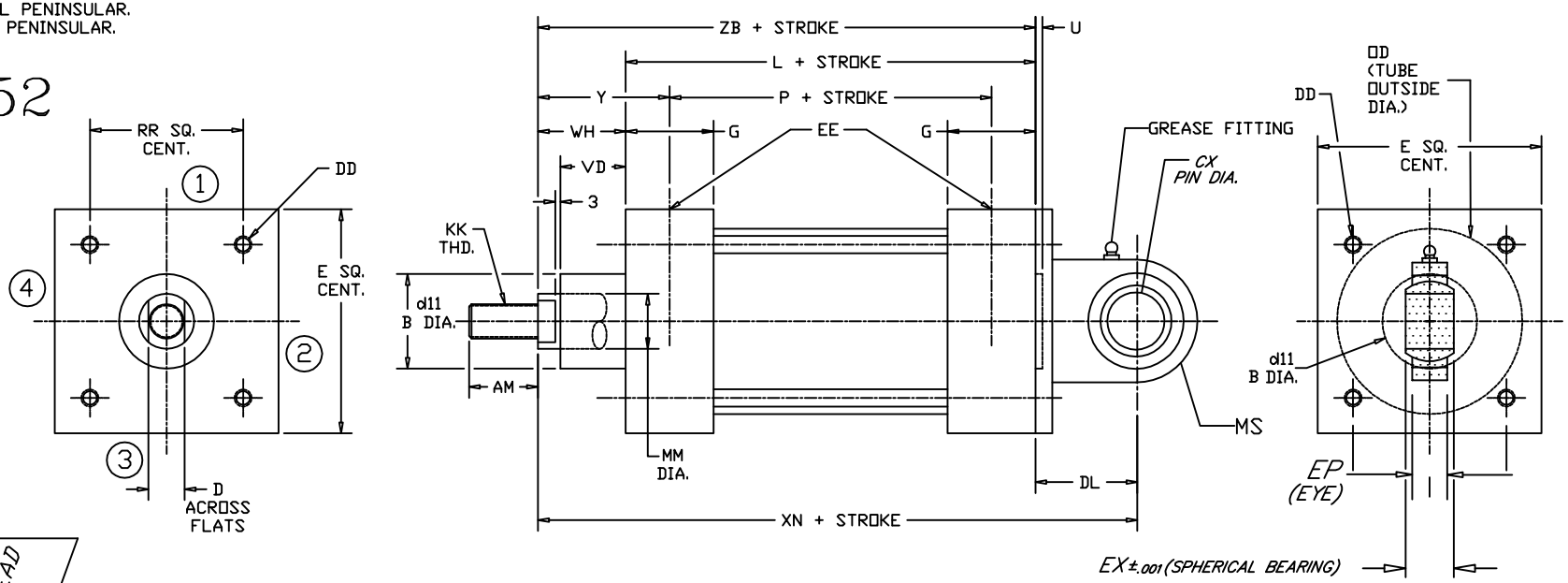

5.30

BORE	ø ROD	STANDARD MALE ROD THREAD																							
	MM	KK	AM	B	d11	CX	D	DD	DL	E (MAX.)	EE	EP	EX	G (MAX.)	L	MS	OD	P	RR	U	VD	WH	XN	Y (MIN.)	ZB
32	12	M10 × 1.25	22	30	+0.13 −0.06	10	10	M6 × 1.0	22	50	1/8	10.5	14	35	94	18	38.1	68	32.5	4	20	26	142	39	120
40	16	M12 × 1.25	24	35		12	13	M6 × 1.0	25	58	1/4	12	16	39	105	18	44.4	77	38	4	22	30	160	44	135
50	20	M16 × 1.5	32	40	+0.16	16	16	M8 × 1.25	27	70	1/4	15	21	39	106	21	57.1	78	46.5	4	29	37	170	51	143
63	20	M16 × 1.5	32	45	−0.08	16	16	M8 × 1.25	32	85	3/8	15	21	46	121	23	69.9	89	56.5	4	29	37	190	53	158
80	25	M20 × 1.5	40	45		20	21	M10 × 1.5	36	105	3/8	18	25	48	128	28	88.9	96	72	4	35	46	210	62	174
100	32	M20 × 1.5	40	55		20	21	M10 × 1.5	41	130	1/2	18	25	51	138	30	108.0	102	89	4	38	51	230	69	189
125	32	M27 × 2.0	54	60	+0.19	30	27	M12 × 1.75	50	157	1/2	25	37	62	160	40	133.3	124	110	6	50	65	275	83	225
160	40	M36 × 2.0	72	65	−0.10	35	36	M16 × 2.0	55	195	3/4	30	43	70	180	44	158.8	130	140	6	60	80	315	105	260
200	40	M36 × 2.0	72	75		35	36	M16 × 2.0	60	238	3/4	30	43	70	180	47	212.7	130	175	6	70	95	335	120	275
250	50	M42 × 2.0	84	90	+0.22	40	46	M20 × 2.5	70	290	1	35	49	70	200	53	266.7	138	220	10	80	105	375	136	305
320	50	M48 × 2.0	96	110	−0.12	50	46	M24 × 3.0	80	353	1	45	60	75	220	63	317.5	158	270	10	90	120	420	151	340

FILE: 5.30_IMH30S2.dwg REV: 02/09/2010

27650 Groesbeck Hwy • Roseville, MI 48066-2759 • Phone 586.775.7211 • Fax 586.775.4545 • Toll Free 800.526.7968 • e-mail: sales@peninsularcylinders.com • www.peninsularcylinders.com

"PUSH" & "PULL" Force Charts - Pneumatic Cylinders

for Peninsular - Series IMH - Heavy-Duty, METRIC Air Cylinders

"PUSH" - (EXTENDED CYLINDER STROKE) FORCES IN POUNDS & KILOGRAMS

Bore in MM	Bore Size Inches	Air Line Pressure (PSI and Bars)													
		PSI	60	65	70	75	80	85	90	95	100	105	110	115	120
		BARS	4.1	4.5	4.8	5.2	5.5	5.9	6.2	6.6	6.9	7.2	7.6	7.9	8.3
32	1 ¼	LBs	74	80	86	92	98	104	110	117	123	129	135	141	147
		KGs	33	36	39	42	45	47	50	53	56	58	61	64	67
40	1 ½	LBs	106	115	124	133	141	150	159	168	177	186	194	203	212
		KGs	48	52	56	60	64	68	72	76	80	84	88	92	96
50	2	LBs	188	204	220	236	251	267	283	298	314	330	346	361	377
		KGs	86	93	100	107	114	121	128	135	143	150	157	164	171
63	2 ½	LBs	295	319	344	368	393	417	442	466	491	515	540	565	589
		KGs	134	145	156	167	178	189	200	212	223	234	245	256	267
80	3 ¼	LBs	498	539	581	622	664	705	747	788	830	871	913	954	995
		KGs	226	245	263	282	301	320	339	357	376	395	414	433	452
100	4	LBs	754	817	880	942	1005	1068	1131	1194	1257	1319	1382	1445	1508
		KGs	342	371	399	428	456	485	513	542	570	599	627	656	684
125	5	LBs	1178	1276	1374	1473	1571	1669	1767	1865	1964	2062	2160	2258	2356
		KGs	534	579	623	668	713	757	802	846	891	935	980	1024	1069
160	6	LBs	1696	1838	1979	2121	2262	2403	2545	2686	2827	2969	3110	3252	3393
		KGs	770	834	898	962	1026	1090	1154	1218	1283	1347	1411	1475	1539
200	8	LBs	3016	3267	3519	3770	4021	4273	4524	4775	5027	5278	5529	5781	6032
		KGs	1368	1482	1596	1710	1824	1938	2052	2166	2280	2394	2508	2622	2736
250	10	LBs	4712	5105	5498	5891	6283	6676	7069	7461	7854	8247	8639	9032	9425
		KGs	2138	2316	2494	2672	2850	3028	3206	3384	3563	3741	3919	4097	4275
320	12	LBs	6786	7351	7917	8482	9048	9613	10179	10744	11310	11875	12441	13006	13572
		KGs	3078	3335	3591	3848	4104	4361	4617	4874	5130	5387	5643	5900	6156

English
Metric

Note: "Push" Forces in Pounds = (Cylinder Bore Diameter)^2 x .7854 x Line Pressure

Rev. 2/9/2010

PENINSULAR® CYLINDER CO.

Section 6

Table of Contents

Model ILM - *METRIC, Medium Duty Aluminum Air Cylinders*

Our Green Model ILM - FAB Brochure - contains information about :

- *FEATURES, ADVANTAGES & BENEFITS of the Model ILM Air Cylinder*
- *HOW TO ORDER the Model ILM METRIC Air Cylinder*

Model ILM - Air Cylinder Dimensional Data

Page 6.00 ILM 0
No Mount Single Rod
Available for Front or Rear Flush Mounts (MX0)

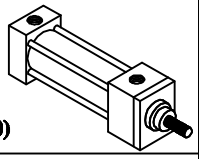

Page 6.03 ILM 3
Detachable Rear Clevis (MP2)

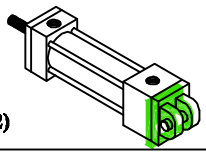

Page 6.04 ILM 4
Detachable Front Flange (MF1)

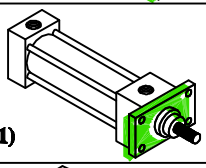

Page 6.05 ILM 5
Detachable Rear Flange (MF2)

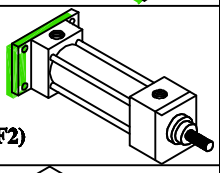

Page 6.06 ILM 6
Center Trunnion (MT4)

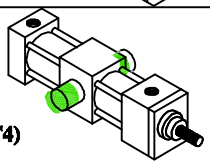

Page 6.08 ILM 8
Head Tie Rod Extended (MX3)

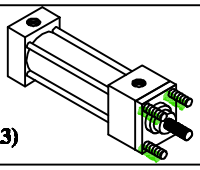

Page 6.11 ILM 11
Cap Tie Rod Extended (MX2)

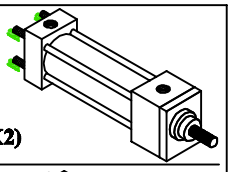

Page 6.12 ILM 12
Head & Cap Tie Rod Extended (MX1)

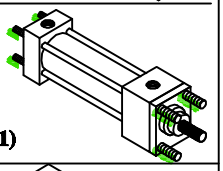

Page 6.13 ILM 13
Detachable Front Angle Foot (MS1)

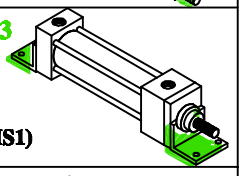

Page 6.21 ILM 21
Cap Detachable Eye (MP4)

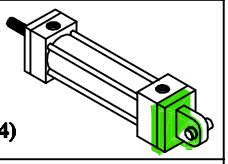

Page 6.30 ILM 30
Cap Detachable Spherical Eye (MP6)

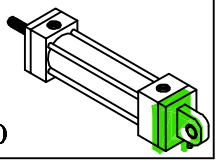

Pages 6.31 & 6.32
Cylinder "Push" & "Pull" Force Charts:
(use to select the correct cylinder Bore Size)

www.peninsularcylinders.com

1-800-526-7968

27650 Groesbeck Highway * Roseville, Michigan 48066-2759

(586) 775-7211 * (586) 775-4545 fax * email: sales@peninsularcylinders.com

NO MOUNT

Medium Duty Aluminum Air Cylinder • METRIC (DETACHABLE MOUNTINGS)

Peninsular Mounting Style: ILM 0

FOR BORE SIZES UP TO 1000 mm CALL PENINSULAR.
FOR ADDITIONAL ROD SIZES AVAILABLE CALL PENINSULAR.
FOR OPTIONAL ROD THREADS CALL PENINSULAR.
FOR OPTIONAL PORT SIZES CALL PENINSULAR.

ISO 15552

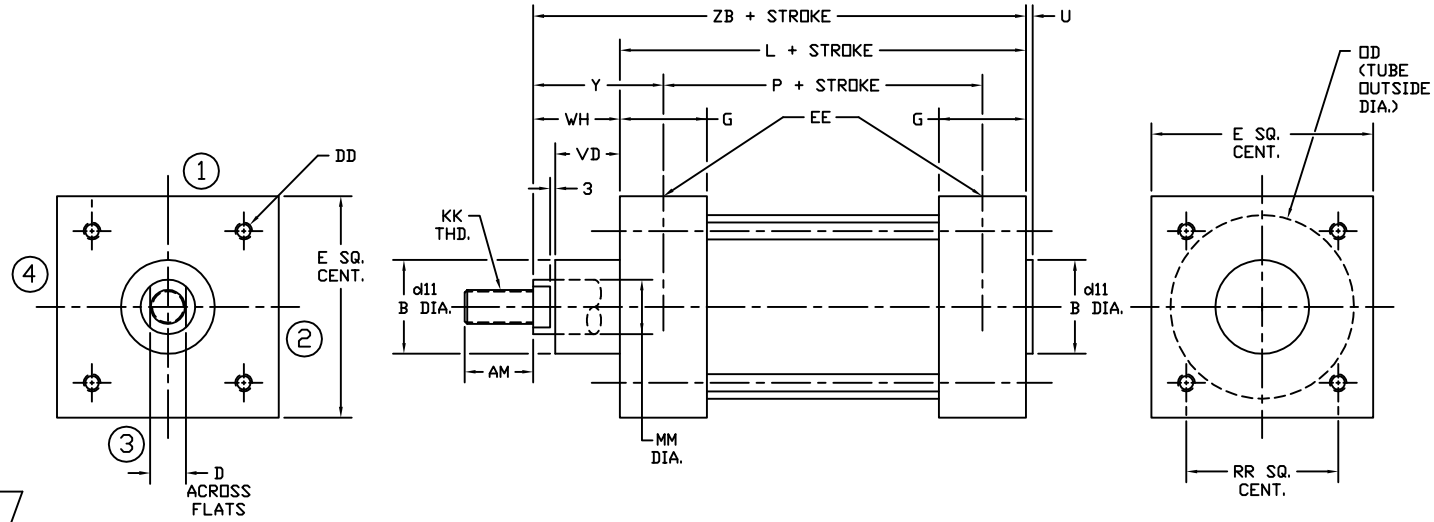

6.00

BORE	Ø ROD	STANDARD MALE ROD THREAD							MAX.		MAX.								MIN.	
	MM	KK	AM	B	d11	D	DD	E	EE	G	L	OD	P	RR	U	VD	WH	Y	ZB
32	12	M10 × 1.25	22	30	+0.13 −0.06	10	M6 × 1.0	50	1/8	35	94	38.1	68	32.5	4	20	26	39	120
40	16	M12 × 1.25	24	35		13	M6 × 1.0	58	1/4	39	105	44.4	77	38	4	22	30	44	135
50	20	M16 × 1.5	32	40	+0.16	16	M8 × 1.25	70	1/4	39	106	57.1	78	46.5	4	29	37	51	143
63	20	M16 × 1.5	32	45	−0.08	16	M8 × 1.25	85	3/8	46	121	69.9	89	56.5	4	29	37	53	158
80	25	M20 × 1.5	40	45		21	M10 × 1.5	105	3/8	48	128	88.9	96	72	4	35	46	62	174
100	32	M20 × 1.5	40	55		21	M10 × 1.5	130	1/2	51	138	108.0	102	89	4	38	51	69	189
125	32	M27 × 2.0	54	60	+0.19	27	M12 × 1.75	157	1/2	62	160	133.3	124	110	6	50	65	83	225
160	40	M36 × 2.0	72	65	−0.10	36	M16 × 2.0	195	3/4	70	180	158.8	130	140	6	60	80	105	260
200	40	M36 × 2.0	72	75		36	M16 × 2.0	238	3/4	70	180	212.7	130	175	6	70	95	120	275
250	50	M42 × 2.0	84	90	+0.22	46	M20 × 2.5	290	1	70	200	266.7	138	220	10	80	105	136	305
320	50	M48 × 2.0	96	110	−0.12	46	M24 × 3.0	353	1	75	220	317.5	158	270	10	90	120	151	340

FILE: 6.00_ILM0 MX0.dwg REV: 04/02/2009

27650 Groesbeck Hwy • Roseville, MI 48066-2759 • Phone 586.775.7211 • Fax 586.775.4545 • Toll Free 800.526.7968 • e-mail: sales@peninsularcylinders.com • www.peninsularcylinders.com

DETACHABLE REAR CLEVIS

ISO Mounting Style ILM 3

PENINSULAR® CYLINDER COMPANY

Metric, Medium Duty
Aluminum Air Cylinder

NOTE:
For bore sizes up to 1000 mm call Peninsular.
For additional rod sizes available call Peninsular.
For optional rod threads call Peninsular.
* For in port mounted proximity switches, ports and cushions refer to the ordering guide.
U.S. patent numbers: 4,726,282 and D295,753.

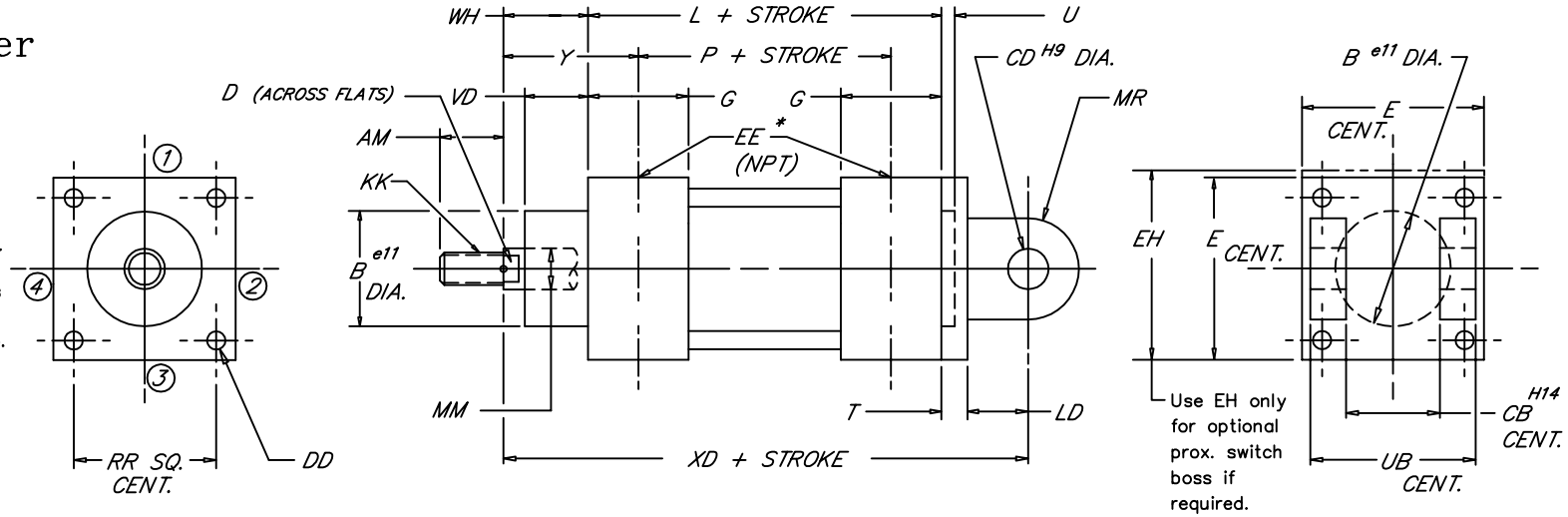

6.00

BORE	ROD DIA. MM	STANDARD MALE ROD THREAD KK	AM	B	CB	CD	D	DD	E MAX.	EE	EH	G	L MAX.	LD	MR	P	RR	T	U	UB	VD	WH	XD	Y
32	12	M10 X 1.25	22	30	26	10	10	M6	50	1/8	62.7	35	94	12	11	68	32.5	10	4	45	20	26	142	39
40	16	M12 X 1.25	24	35	28	12	13	M6	58	1/4	62.7	39	105	15	13	77	38	10	4	52	22	30	160	44
50	20	M16 X 1.5	32	40	32	12	16	M8	70	1/4	72.1	39	106	15	13	78	46.5	12	4	60	29	37	170	51
63	20	M16 X 1.5	32	45	40	16	16	M8	85	3/8	80.3	46	121	20	17	89	56.5	12	4	70	29	37	190	53
80	25	M20 X 1.5	40	45	50	16	21	M10	105	3/8	94.5	48	128	20	17	96	72	16	4	90	35	46	210	62
100	32	M20 X 1.5	40	55	60	20	21	M10	130	1/2	114.6	51	138	25	21	102	89	16	4	110	38	51	230	69
125	32	M27 X 2.0	54	60	70	25	27	M12	157	1/2	141.5	62	160	30	26	124	110	20	6	130	50	65	275	83
160	40	M36 X 2.0	72	65	90	30	36	M16	195	3/4	165.1	70	180	35	31	130	140	20	6	170	60	80	315	105
200	40	M36 X 2.0	72	75	90	30	36	M16	238	3/4	238	70	180	35	31	130	175	25	6	170	70	95	335	120
250	50	M42 X 2.0	84	90	110	40	46	M20	290	1	290	70	200	45	41	138	220	25	10	200	80	105	375	136
320	50	M48 X 2.0	96	110	120	45	46	M24	353	1	353	75	220	50	46	158	270	30	10	220	90	120	420	151

METRIC

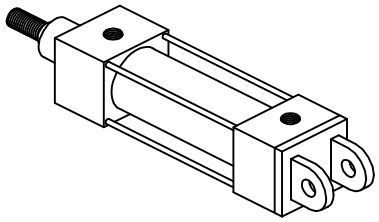

VDMA 24-562
NAAMS
DIN ISO 6431
(MP2)

FILE: 6.00_ILM00S2.dwg REV: 02/09/2010

27650 Groesbeck Hwy • Roseville, MI 48066-2759 • Phone 586.775.7211 • Fax 586.775.4545 • Toll Free 800.526.7968 • e-mail: sales@peninsularcylinders.com • www.peninsularcylinders.com

DETACHABLE FRONT FLANGE

ISO Mounting Style ILM 4

PENINSULAR® CYLINDER COMPANY

Metric, Medium Duty
Aluminum Air Cylinder

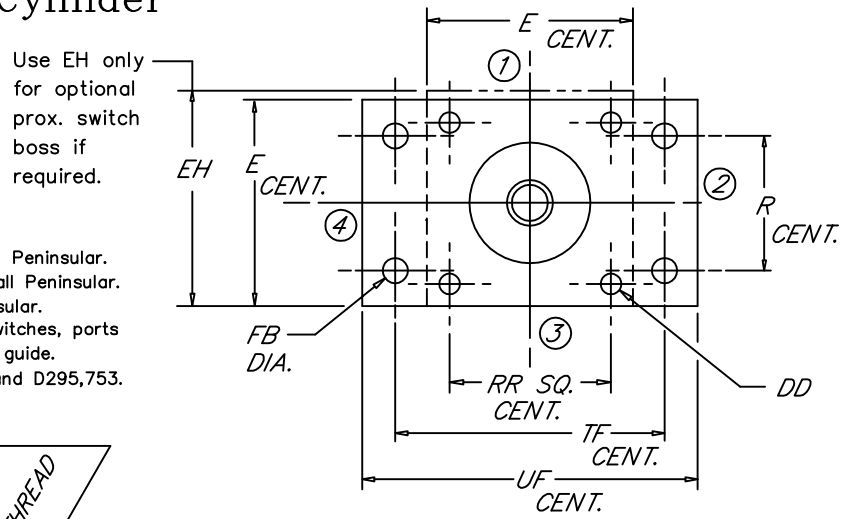

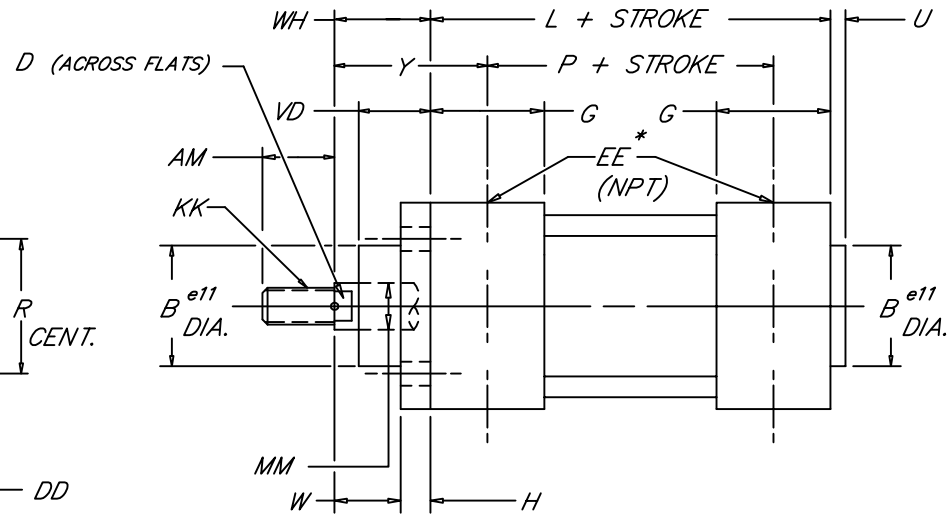

NOTE:
For bore sizes up to 1000 mm call Peninsular.
For additional rod sizes available call Peninsular.
For optional rod threads call Peninsular.
* For in port mounted proximity switches, ports and cushions refer to the ordering guide.
U.S. patent numbers: 4,726,282 and D295,753.

6.04

BORE	ROD DIA. MM	STANDARD MALE ROD THREAD KK	AM	B	D	DD	E	EE	EH MAX.	FB	G	H	L	P	R	RR	TF	U	UF MAX.	VD	W	WH	Y
32	12	M10 X 1.25	22	30	10	M6	50	1/8	62.7	7	35	10	94	68	32	32.5	64	4	86	20	16	26	39
40	16	M12 X 1.25	24	35	13	M6	58	1/4	62.7	9	39	10	105	77	36	38	72	4	96	22	20	30	44
50	20	M16 X 1.5	32	40	16	M8	70	1/4	72.1	9	39	12	106	78	45	46.5	90	4	115	29	25	37	51
63	20	M16 X 1.5	32	45	16	M8	85	3/8	80.3	9	46	12	121	89	50	56.5	100	4	130	29	25	37	53
80	25	M20 X 1.5	40	45	21	M10	105	3/8	94.5	12	48	16	128	96	63	72	126	4	165	35	30	46	62
100	32	M20 X 1.5	40	55	21	M10	130	1/2	114.6	14	51	16	138	102	75	89	150	4	187	38	35	51	69
125	32	M27 X 2.0	54	60	27	M12	157	1/2	141.5	16	62	20	160	124	90	110	180	6	224	50	45	65	83
160	40	M36 X 2.0	72	65	36	M16	195	3/4	165.1	18	70	20	180	130	115	140	230	6	280	60	60	80	105
200	40	M36 X 2.0	72	75	36	M16	238	3/4	238	22	70	25	180	130	135	175	270	6	320	70	70	95	120
250	50	M42 X 2.0	84	90	46	M20	290	1	290	26	70	25	200	138	165	220	330	10	395	80	80	105	136
320	50	M48 X 2.0	96	110	46	M24	353	1	353	33	75	30	220	158	200	270	400	10	475	90	90	120	151

METRIC

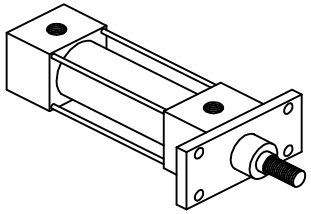

VDMA 24-562
NAAMS
DIN ISO 6431
(MF1)

FILE: 6.04_ILM04S2.dwg REV: 02/09/2010

27650 Groesbeck Hwy • Roseville, MI 48066-2759 • Phone 586.775.7211 • Fax 586.775.4545 • Toll Free 800.526.7968 • e-mail: sales@peninsularcylinders.com • www.peninsularcylinders.com

DETACHABLE REAR FLANGE

ISO Mounting Style ILM 5

PENINSULAR® CYLINDER COMPANY

Metric, Medium Duty
Aluminum Air Cylinder

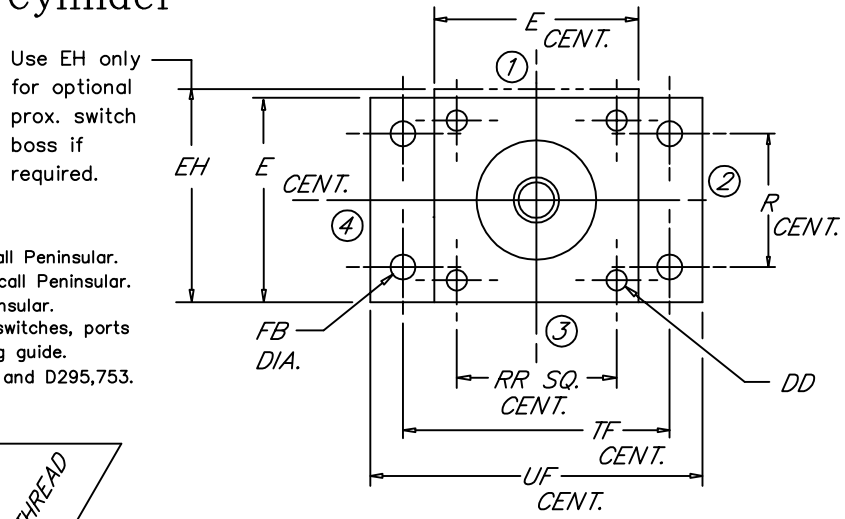

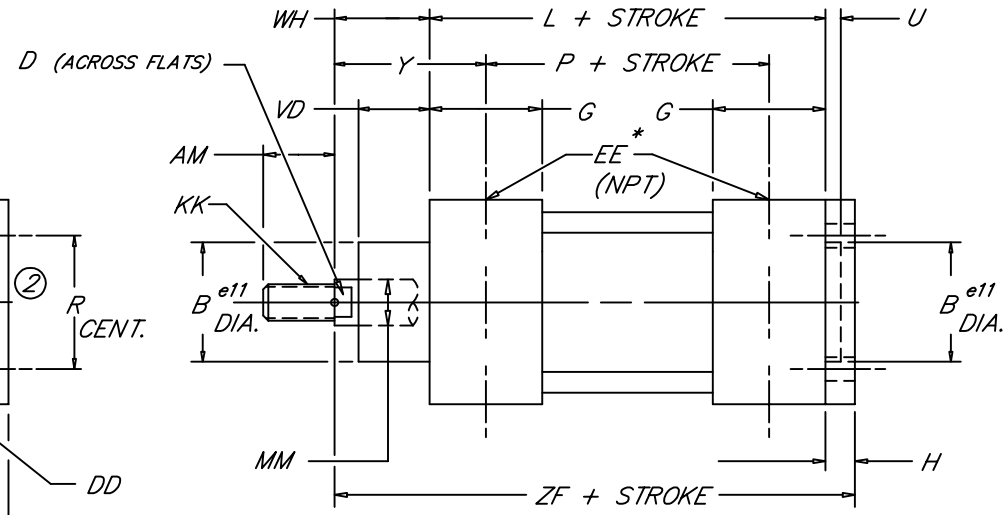

NOTE:
For bore sizes up to 1000 mm call Peninsular.
For additional rod sizes available call Peninsular.
For optional rod threads call Peninsular.
* For in port mounted proximity switches, ports and cushions refer to the ordering guide.
U.S. patent numbers: 4,726,282 and D295,753.

6.05

BORE	ROD DIA. MM	STANDARD MALE ROD THREAD KK	AM	B	D	DD	E MAX.	EE	EH	FB	G	H MAX.	L	P	R	RR	TF	U	UF	VD	WH	Y	ZF
32	12	M10 X 1.25	22	30	10	M6	50	1/8	62.7	7	35	10	94	68	32	32.5	64	4	86	20	26	39	130
40	16	M12 X 1.25	24	35	13	M6	58	1/4	62.7	9	39	10	105	77	36	38	72	4	96	22	30	44	145
50	20	M16 X 1.5	32	40	16	M8	70	1/4	72.1	9	39	12	106	78	45	46.5	90	4	115	29	37	51	155
63	20	M16 X 1.5	32	45	16	M8	85	3/8	80.3	9	46	12	121	89	50	56.5	100	4	130	29	37	53	170
80	25	M20 X 1.5	40	45	21	M10	105	3/8	94.5	12	48	16	128	96	63	72	126	4	165	35	46	62	190
100	32	M20 X 1.5	40	55	21	M10	130	1/2	114.6	14	51	16	138	102	75	89	150	4	187	38	51	69	205
125	32	M27 X 2.0	54	60	27	M12	157	1/2	141.5	16	62	20	160	124	90	110	180	6	224	50	65	83	245
160	40	M36 X 2.0	72	65	36	M16	195	3/4	165.1	18	70	20	180	130	115	140	230	6	280	60	80	105	280
200	40	M36 X 2.0	72	75	36	M16	238	3/4	238	22	70	25	180	130	135	175	270	6	320	70	95	120	300
250	50	M42 X 2.0	84	90	46	M20	290	1	290	26	70	25	200	138	165	220	330	10	395	80	105	136	330
320	50	M48 X 2.0	96	110	46	M24	353	1	353	33	75	30	220	158	200	270	400	10	475	90	120	151	370

METRIC

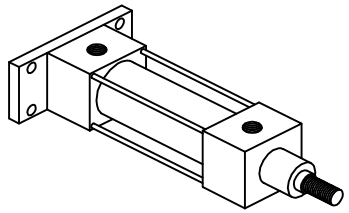

VDMA 24-562
NAAMS
DIN ISO 6431
(MF2)

FILE: 6.05_ILM05S2.dwg REV: 02/09/2010

27650 Groesbeck Hwy • Roseville, MI 48066-2759 • Phone 586.775.7211 • Fax 586.775.4545 • Toll Free 800.526.7968 • e-mail: sales@peninsularcylinders.com • www.peninsularcylinders.com

CENTER TRUNNION

ISO Mounting Style ILM 6

PENINSULAR® CYLINDER COMPANY

Metric, Medium Duty
Aluminum Air Cylinder

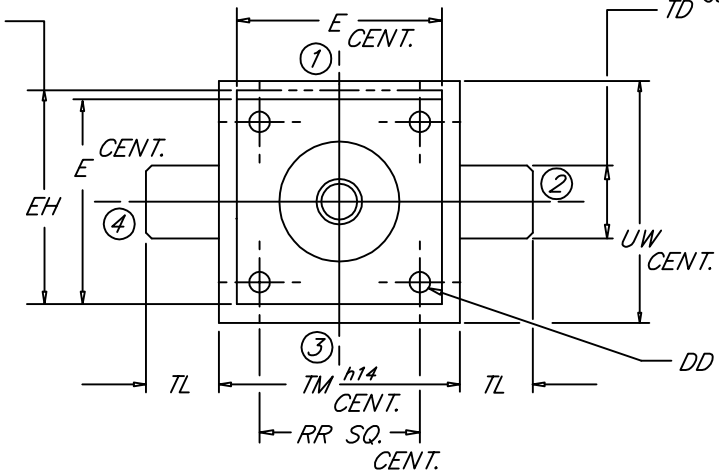

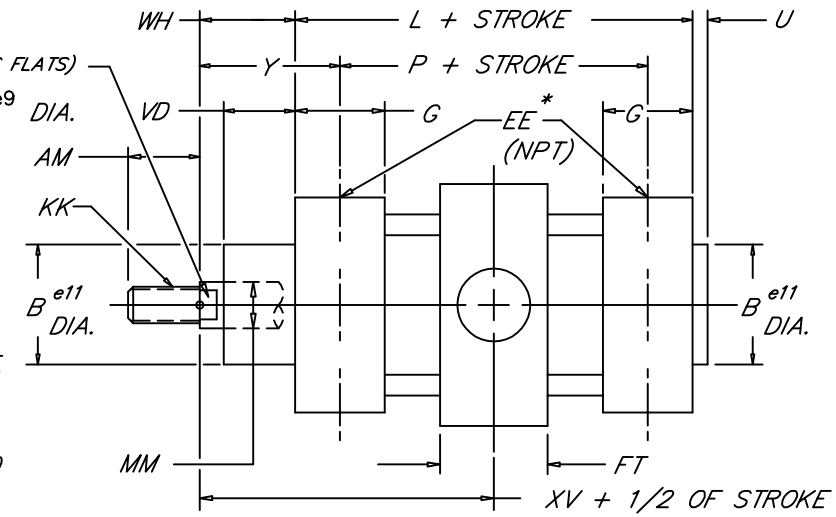

NOTE:
For bore sizes up to 1000 mm call Peninsular.
For additional rod sizes available call Peninsular.
For optional rod threads call Peninsular.
* For in port mounted proximity switches, ports and cushions refer to the ordering guide.
U.S. patent numbers: 4,726,282 and D295,753.

6.06

BORE	ROD DIA. MM	STANDARD MALE ROD THREAD KK	AM	B	D	DD	E	EE	EH	FT	G	L MAX.	P	RR	TD	TL	TM	U	UW	VD	WH	XV MAX.	Y
32	12	M10 X 1.25	22	30	10	M6	50	1/8	62.7	25	35	94	68	32.5	12	12	50	4	65	20	26	73.0	39
40	16	M12 X 1.25	24	35	13	M6	58	1/4	62.7	28	39	105	77	38	16	16	63	4	75	22	30	82.5	44
50	20	M16 X 1.5	32	40	16	M8	70	1/4	72.1	28	39	106	78	46.5	16	16	75	4	95	29	37	90.0	51
63	20	M16 X 1.5	32	45	16	M8	85	3/8	80.3	36	46	121	89	56.5	20	20	90	4	105	29	37	97.5	53
80	25	M20 X 1.5	40	45	21	M10	105	3/8	94.5	36	48	128	96	72	20	20	110	4	130	35	46	110.0	62
100	32	M20 X 1.5	40	55	21	M10	130	1/2	114.6	48	51	138	102	89	25	25	132	4	145	38	51	120.0	69
125	32	M27 X 2.0	54	60	27	M12	157	1/2	141.5	50	62	160	124	110	25	25	160	6	175	50	65	145.0	83
160	40	M36 X 2.0	72	65	36	M16	195	3/4	165.1	50	70	180	130	140	32	32	200	6	220	60	80	170.0	105
200	40	M36 X 2.0	72	75	36	M16	238	3/4	238	50	70	180	130	175	32	32	250	6	260	70	95	185.0	120
250	50	M42 X 2.0	84	90	46	M20	290	1	290	60	70	200	138	220	40	40	320	10	320	80	105	205.0	136
320	50	M48 X 2.0	96	110	46	M24	353	1	353	70	75	220	158	270	50	50	400	10	400	90	120	230.0	151

METRIC

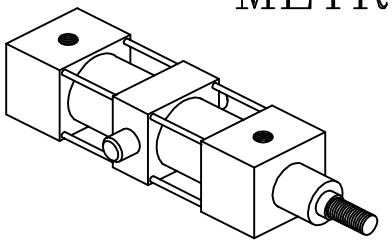

VDMA 24-562
NAAMS
DIN ISO 6431
(MT4)

FILE: 6.06_ILM06S2.dwg REV: 02/09/2010

27650 Groesbeck Hwy • Roseville, MI 48066-2759 • Phone 586.775.7211 • Fax 586.775.4545 • Toll Free 800.526.7968 • e-mail: sales@peninsularcylinders.com • www.peninsularcylinders.com

HEAD TIE ROD EXTENDED

Medium Duty Aluminum Air Cylinder • METRIC (DETACHABLE MOUNTINGS)

Peninsular Mounting Style: ILM 08

FOR BORE SIZES UP TO 1000 mm CALL PENINSULAR.
FOR ADDITIONAL ROD SIZES AVAILABLE CALL PENINSULAR.
FOR OPTIONAL ROD THREADS CALL PENINSULAR.
FOR OPTIONAL PORT SIZES CALL PENINSULAR.

ISO 15552

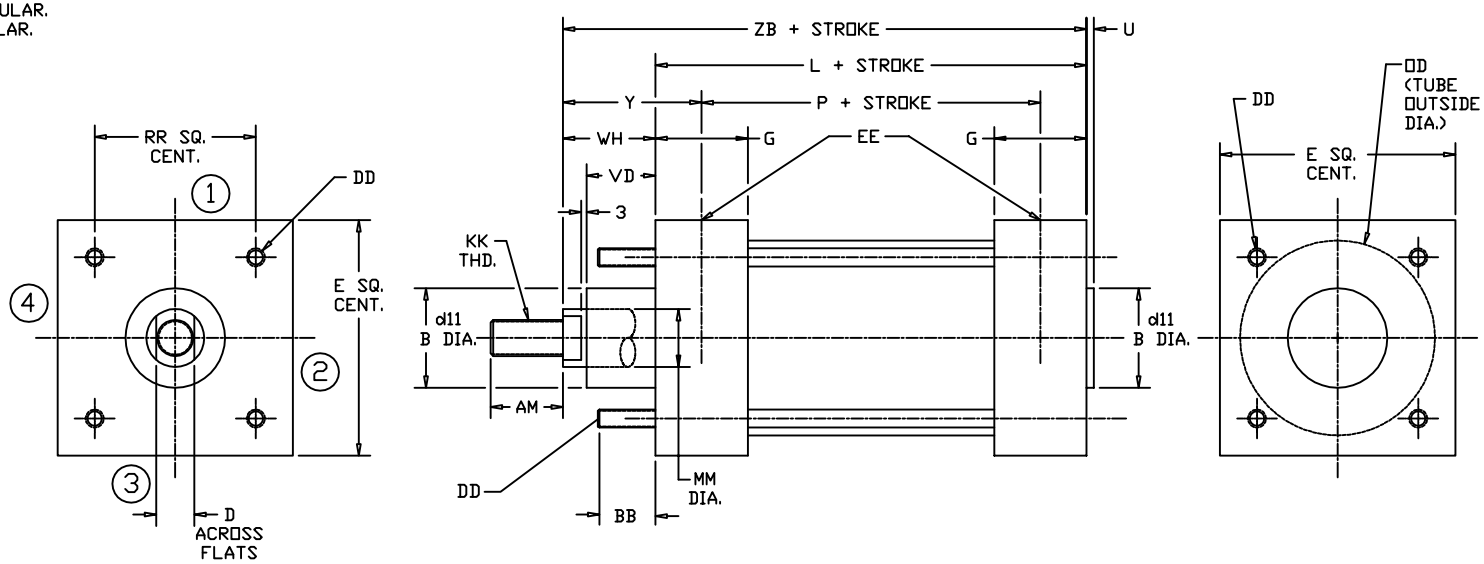

6.08

BORE	Ø ROD	STANDARD MALE ROD THREAD							MAX.		MAX.								MIN.	
	MM	KK	AM	B	d11	BB	D	DD	E	EE	G	L	OD	P	RR	U	VD	WH	Y	ZB
32	12	M10 × 1.25	22	30	+0.13 −0.06	17	10	M6 × 1.0	50	1/8	35	94	38.1	68	32.5	4	20	26	39	120
40	16	M12 × 1.25	24	35		17	13	M6 × 1.0	58	1/4	39	105	44.4	77	38	4	22	30	44	135
50	20	M16 × 1.5	32	40	+0.16	23	16	M8 × 1.25	70	1/4	39	106	57.1	78	46.5	4	29	37	51	143
63	20	M16 × 1.5	32	45	−0.08	23	16	M8 × 1.25	85	3/8	46	121	69.9	89	56.5	4	29	37	53	158
80	25	M20 × 1.5	40	45		28	21	M10 × 1.5	105	3/8	48	128	88.9	96	72	4	35	46	62	174
100	32	M20 × 1.5	40	55		28	21	M10 × 1.5	130	1/2	51	138	108.0	102	89	4	38	51	69	189
125	32	M27 × 2.0	54	60	+0.19	34	27	M12 × 1.75	157	1/2	62	160	133.3	124	110	6	50	65	83	225
160	40	M36 × 2.0	72	65	−0.10	42	36	M16 × 2.0	195	3/4	70	180	158.8	130	140	6	60	80	105	260
200	40	M36 × 2.0	72	75		42	36	M16 × 2.0	238	3/4	70	180	212.7	130	175	6	70	95	120	275
250	50	M42 × 2.0	84	90	+0.22	52	46	M20 × 2.5	290	1	70	200	266.7	138	220	10	80	105	136	305
320	50	M48 × 2.0	96	110	−0.12	52	46	M24 × 3.0	353	1	75	220	317.5	158	270	10	90	120	151	340

FILE: 6.08_ILM08S2.dwg REV: 02/09/2010

27650 Groesbeck Hwy • Roseville, MI 48066-2759 • Phone 586.775.7211 • Fax 586.775.4545 • Toll Free 800.526.7968 • e-mail: sales@peninsularcylinders.com • www.peninsularcylinders.com

CAP TIE ROD EXTENDED

Peninsular
Mounting Style: ILM 11

Medium Duty Aluminum Air Cylinder • METRIC (DETACHABLE MOUNTINGS)

FOR BORE SIZES UP TO 1000 mm CALL PENINSULAR.
FOR ADDITIONAL ROD SIZES AVAILABLE CALL PENINSULAR.
FOR OPTIONAL ROD THREADS CALL PENINSULAR.
FOR OPTIONAL PORT SIZES CALL PENINSULAR.

ISO 15552

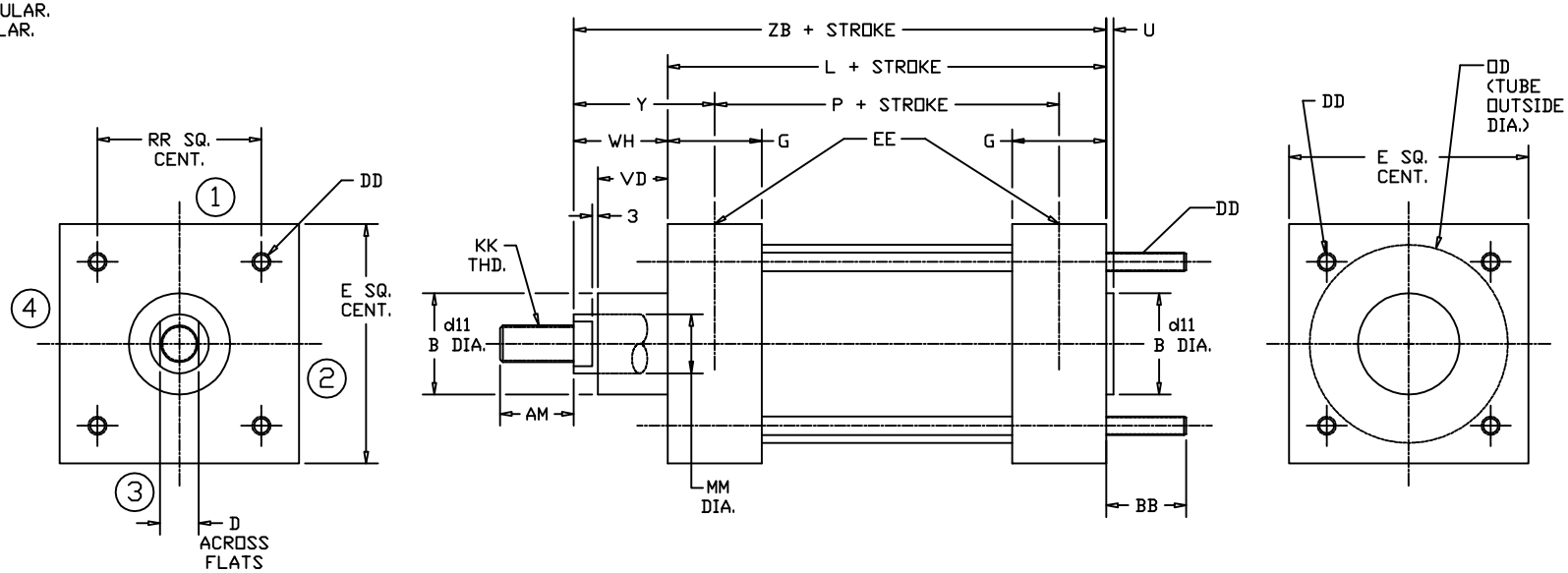

BORE	Ø ROD	STANDARD LONG MALE ROD THREAD								MAX.		MAX.							MIN.		
	MM	KK	AM	B	d11	BB	D	DD	E	EE	G	L	OD	P	RR	U	VD	WH	Y	ZB
32	12	M10 x 1.25	22	30	+0.13 −0.06	17	10	M6 x 1.0	50	1/8	35	94	38.1	68	32.5	4	20	26	39	120
40	16	M12 x 1.25	24	35		17	13	M6 x 1.0	58	1/4	39	105	44.4	77	38	4	22	30	44	135
50	20	M16 x 1.5	32	40	+0.16	23	16	M8 x 1.25	70	1/4	39	106	57.1	78	46.5	4	29	37	51	143
63	20	M16 x 1.5	32	45	−0.08	23	16	M8 x 1.25	85	3/8	46	121	69.9	89	56.5	4	29	37	53	158
80	25	M20 x 1.5	40	45		28	21	M10 x 1.5	105	3/8	48	128	88.9	96	72	4	35	46	62	174
100	32	M20 x 1.5	40	55		28	21	M10 x 1.5	130	1/2	51	138	108.0	102	89	4	38	51	69	189
125	32	M27 x 2.0	54	60	+0.19	34	27	M12 x 1.75	157	1/2	62	160	133.3	124	110	6	50	65	83	225
160	40	M36 x 2.0	72	65	−0.10	42	36	M16 x 2.0	195	3/4	70	180	158.8	130	140	6	60	80	105	260
200	40	M36 x 2.0	72	75		42	36	M16 x 2.0	238	3/4	70	180	212.7	130	175	6	70	95	120	275
250	50	M42 x 2.0	84	90	+0.22	52	46	M20 x 2.5	290	1	70	200	266.7	138	220	10	80	105	136	305
320	50	M48 x 2.0	96	110	−0.12	52	46	M24 x 3.0	353	1	75	220	317.5	158	270	10	90	120	151	340

FILE: 6.11_ILM11S2.dwg REV: 02/09/2010

27650 Groesbeck Hwy • Roseville, MI 48066-2759 • Phone 586.775.7211 • Fax 586.775.4545 • Toll Free 800.526.7968 • e-mail: sales@peninsularcylinders.com • www.peninsularcylinders.com

HEAD & CAP TIE ROD EXTENDED

Mounting Style: ILM 12

Medium Duty Aluminum Air Cylinder • METRIC (DETACHABLE MOUNTINGS)

FOR BORE SIZES UP TO 1000 mm CALL PENINSULAR.
FOR ADDITIONAL ROD SIZES AVAILABLE CALL PENINSULAR.
FOR OPTIONAL ROD THREADS CALL PENINSULAR.
FOR OPTIONAL PORT SIZES CALL PENINSULAR.

ISO 15552

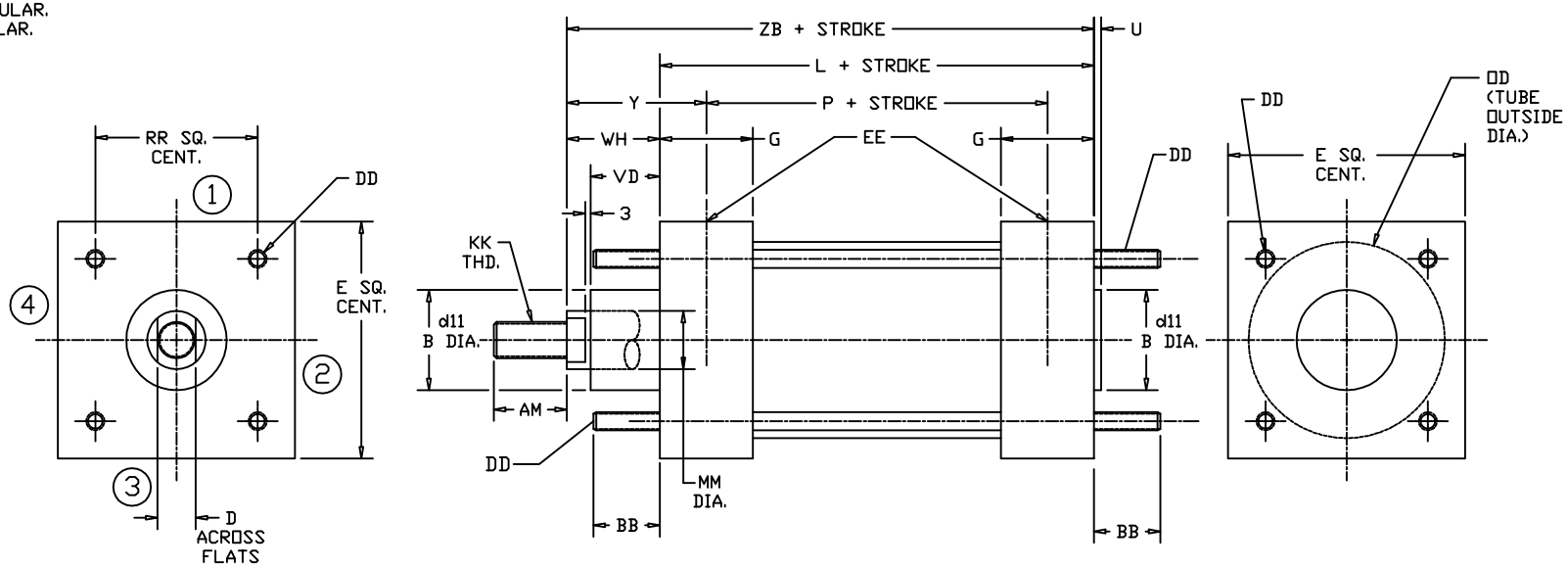

6.12

BORE	ø ROD	STANDARD LONG MALE ROD THREAD							MAX.		MAX.								MIN.	
	MM	KK	AM	B	d11	BB	D	DD	E	EE	G	L	OD	P	RR	U	VD	WH	Y	ZB
	12	M10 × 1.25	22	30	+0.13 −0.06	17	10	M6 × 1.0	50	1/8	35	94	38.1	68	32.5	4	20	26	39	120
	16	M12 × 1.25	24	35		17	13	M6 × 1.0	58	1/4	39	105	44.4	77	38	4	22	30	44	135
	20	M16 × 1.5	32	40	+0.16	23	16	M8 × 1.25	70	1/4	39	106	57.1	78	46.5	4	29	37	51	143
	20	M16 × 1.5	32	45	−0.08	23	16	M8 × 1.25	85	3/8	46	121	69.9	89	56.5	4	29	37	53	158
	25	M20 × 1.5	40	45		28	21	M10 × 1.5	105	3/8	48	128	88.9	96	72	4	35	46	62	174
100	32	M20 × 1.5	40	55		28	21	M10 × 1.5	130	1/2	51	138	108.0	102	89	4	38	51	69	189
125	32	M27 × 2.0	54	60	+0.19	34	27	M12 × 1.75	157	1/2	62	160	133.3	124	110	6	50	65	83	225
160	40	M36 × 2.0	72	65	−0.10	42	36	M16 × 2.0	195	3/4	70	180	158.8	130	140	6	60	80	105	260
200	40	M36 × 2.0	72	75		42	36	M16 × 2.0	238	3/4	70	180	212.7	130	175	6	70	95	120	275
250	50	M42 × 2.0	84	90	+0.22	52	46	M20 × 2.5	290	1	70	200	266.7	138	220	10	80	105	136	305
320	50	M48 × 2.0	96	110	−0.12	52	46	M24 × 3.0	353	1	75	220	317.5	158	270	10	90	120	151	340

FILE: 6.12_ILM12S2.dwg REV: 02/09/2010

27650 Groesbeck Hwy • Roseville, MI 48066-2759 • Phone 586.775.7211 • Fax 586.775.4545 • Toll Free 800.526.7968 • e-mail: sales@peninsularcylinders.com • www.peninsularcylinders.com

DETACHABLE FRONT ANGLE FOOT ISO Mounting Style ILM 13

PENINSULAR® CYLINDER COMPANY

Metric, Medium Duty
Aluminum Air Cylinder

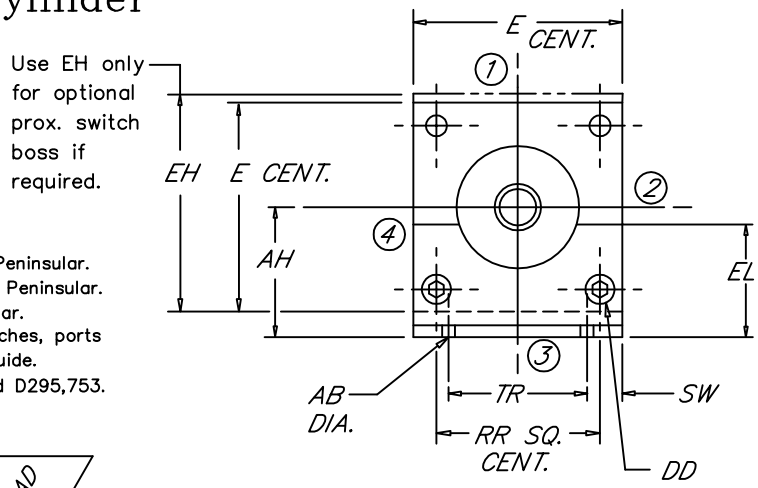

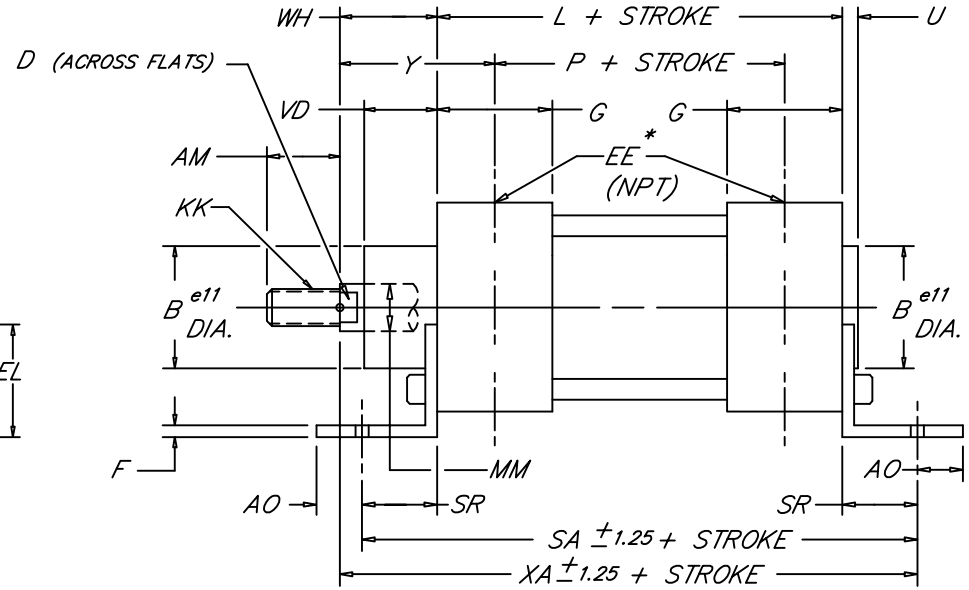

NOTE:
For bore sizes up to 1000 mm call Peninsular.
For additional rod sizes available call Peninsular.
For optional rod threads call Peninsular.
* For in port mounted proximity switches, ports and cushions refer to the ordering guide.
U.S. patent numbers: 4,726,282 and D295,753.

6.13

BORE	ROD DIA. MM	STANDARD MALE ROD THREAD KK	AM	AB	AH	AO	B	D	DD	E MAX.	EE	EH	EL	F	G	L MAX.	P	RR	SA	SR	SW	TR	U	VD	WH	XA	Y
32	12	M10 X 1.25	22	7	32	20.4	30	10	M6	50	1/8	62.7	32	5	35	94	68	32.5	142	24	9.0	32	4	20	26	144	39
40	16	M12 X 1.25	24	10	36	16.4	35	13	M6	58	1/4	62.7	36	5	39	105	77	38	161	28	11.0	36	4	22	30	163	44
50	20	M16 X 1.5	32	10	45	18.8	40	16	M8	70	1/4	72.1	45	6	39	106	78	46.5	170	32	12.5	45	4	29	37	175	51
63	20	M16 X 1.5	32	10	50	18.8	45	16	M8	85	3/8	80.3	50	6	46	121	89	56.5	185	32	17.5	50	4	29	37	190	53
80	25	M20 X 1.5	40	12	63	35.2	45	21	M10	105	3/8	94.5	63	8	48	128	96	72	210	41	21.0	63	4	35	46	215	62
100	32	M20 X 1.5	40	14.5	71	35.2	55	21	M10	130	1/2	114.6	71	8	51	138	102	89	220	41	27.5	75	4	38	51	230	69
125	32	M27 X 2.0	54	16.5	90	31.2	60	27	M12	157	1/2	141.5	90	11	62	160	124	110	250	45	33.5	90	6	50	65	270	83
160	40	M36 X 2.0	72	18.5	115	28.9	65	36	M16	195	3/4	165.1	115	13	70	180	130	140	300	60	40.0	115	6	60	80	320	105
200	40	M36 X 2.0	72	24	135	35	75	36	M16	238	3/4	238	135	13	70	180	130	175	320	70	51.5	135	6	70	95	345	120
250	50	M42 X 2.0	84	28	165	40	90	46	M20	290	1	290	165	13	70	200	138	220	350	75	62.5	165	10	80	105	380	136
320	50	M48 X 2.0	96	35	200	45	110	46	M24	353	1	353	200	13	75	220	158	270	390	85	76.5	200	10	90	120	425	151

METRIC

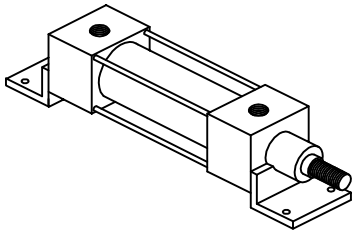

VDMA 24-562
NAAMS
DIN ISO 6431
(MS1)

FILE: 6.13_ILM13S2.dwg REV: 02/09/2010

27650 Groesbeck Hwy • Roseville, MI 48066-2759 • Phone 586.775.7211 • Fax 586.775.4545 • Toll Free 800.526.7968 • e-mail: sales@peninsularcylinders.com • www.peninsularcylinders.com

CAP DETACHABLE EYE

Peninsular
Mounting Style: ILM 21

Medium Duty Aluminum Air Cylinder • METRIC (DETACHABLE MOUNTINGS)

FOR BORE SIZES UP TO 1000 mm CALL PENINSULAR.
FOR ADDITIONAL ROD SIZES AVAILABLE CALL PENINSULAR.
FOR OPTIONAL ROD THREADS CALL PENINSULAR.
FOR OPTIONAL PORT SIZES CALL PENINSULAR.

ISO 15552

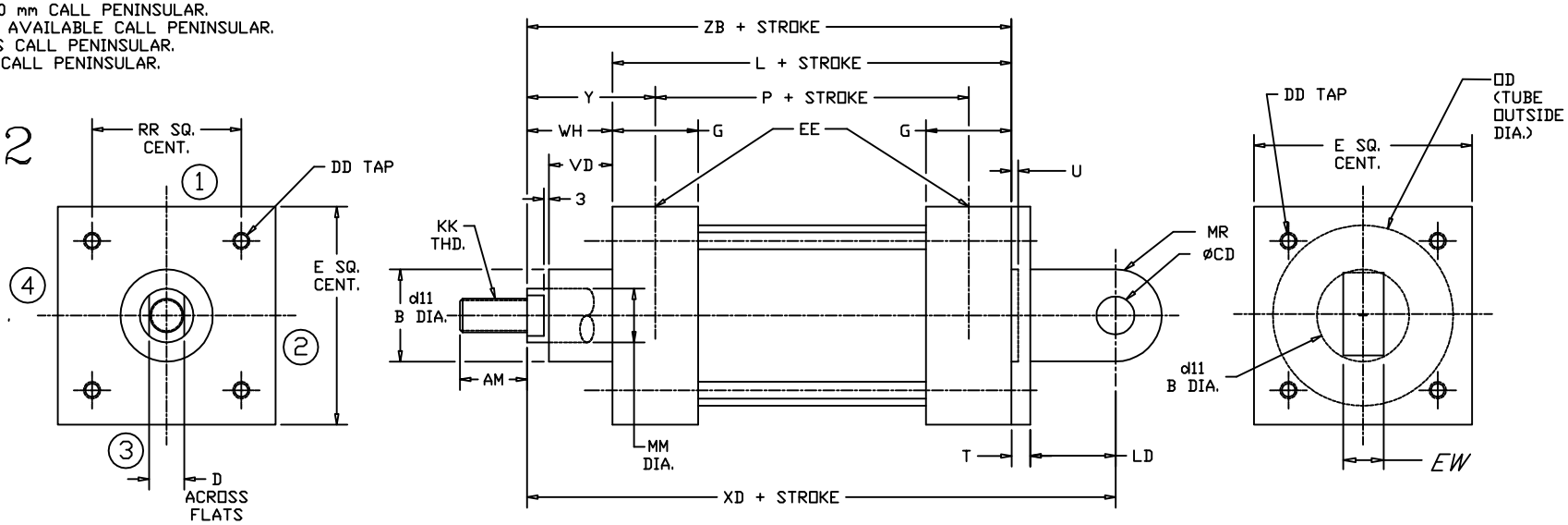

6.21

BORE	ø ROD	STANDARD MALE ROD THREAD								MAX.			MAX.			MAX.									MIN.	
	MM	KK	AM	B	d11	CD	D	DD	E	EW	EE	G	L	LD	MR	OD	P	RR	T	U	VD	WH	XD	Y	ZB
32	12	M10 × 1.25	22	30	+0.13 −0.06	10	10	M6 × 1.0	50	26	1/8	35	94	12	11	38.1	68	32.5	4.5	4	20	26	142	39	120
40	16	M12 × 1.25	24	35		12	13	M6 × 1.0	58	28	1/4	39	105	15	13	44.4	77	38	4.5	4	22	30	160	44	135
50	20	M16 × 1.5	32	40	+0.16	12	16	M8 × 1.25	70	32	1/4	39	106	15	13	57.1	78	46.5	4.5	4	29	37	170	51	143
63	20	M16 × 1.5	32	45	−0.08	16	16	M8 × 1.25	85	40	3/8	46	121	20	17	69.9	89	56.5	4.5	4	29	37	190	53	158
80	25	M20 × 1.5	40	45		16	21	M10 × 1.5	105	50	3/8	48	128	20	17	88.9	96	72	4.5	4	35	46	210	62	174
100	32	M20 × 1.5	40	55		20	21	M10 × 1.5	130	60	1/2	51	138	25	21	108.0	102	89	4.5	4	38	51	230	69	189
125	32	M27 × 2.0	54	60	+0.19	25	27	M12 × 1.75	157	70	1/2	62	160	30	26	133.3	124	110	7	6	50	65	275	83	225
160	40	M36 × 2.0	72	65	−0.10	30	36	M16 × 2.0	195	90	3/4	70	180	35	31	158.8	130	140	7	6	60	80	315	105	260
200	40	M36 × 2.0	72	75		30	36	M16 × 2.0	238	90	3/4	70	180	35	31	212.7	130	175	7	6	70	95	335	120	275
250	50	M42 × 2.0	84	90	+0.22	40	46	M20 × 2.5	290	110	1	70	200	45	41	266.7	138	220	11	10	80	105	375	136	305
320	50	M48 × 2.0	96	110	−0.12	45	46	M24 × 3.0	353	120	1	75	220	50	46	317.5	158	270	11	10	90	120	420	151	340

FILE: 6.21_ILM21S2.dwg REV: 02/09/2010

27650 Groesbeck Hwy • Roseville, MI 48066-2759 • Phone 586.775.7211 • Fax 586.775.4545 • Toll Free 800.526.7968 • e-mail: sales@peninsularcylinders.com • www.peninsularcylinders.com

CAP DETACHABLE SPHERICAL EYE

Peninsular Mounting Style: ILM 30

Medium Duty Aluminum Air Cylinder • METRIC (DETACHABLE MOUNTINGS)

FOR BORE SIZES UP TO 1000 mm CALL PENINSULAR.
FOR ADDITIONAL ROD SIZES AVAILABLE CALL PENINSULAR.
FOR OPTIONAL ROD THREADS CALL PENINSULAR.
FOR OPTIONAL PORT SIZES CALL PENINSULAR.

ISO 15552

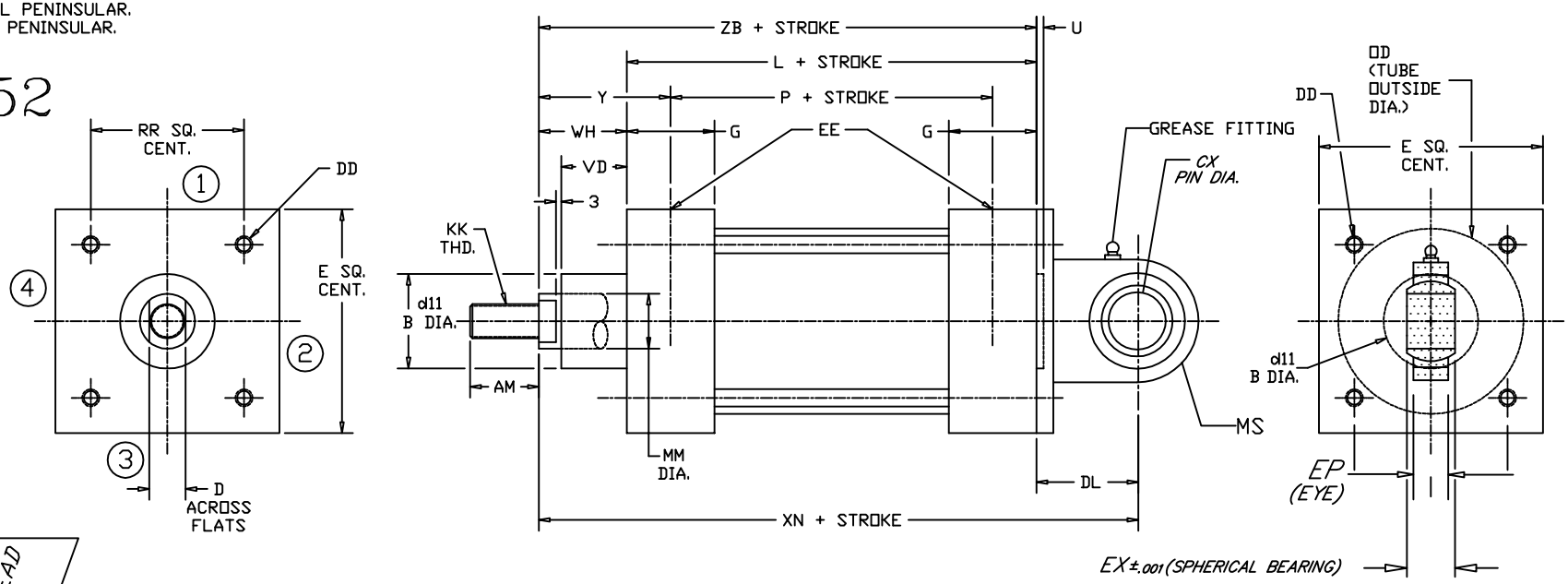

6.30

BORE	Ø ROD	STANDARD MALE ROD THREAD																							
	MM	KK	AM	B	d11	CX	D	DD	DL	E (MAX.)	EE	EP	EX	G (MAX.)	L	MS	OD	P	RR	U	VD	WH	XN	Y (MIN.)	ZB
32	12	M10 × 1.25	22	30	+0.13 −0.06	10	10	M6 × 1.0	22	50	1/8	10.5	14	35	94	18	38.1	68	32.5	4	20	26	142	39	120
40	16	M12 × 1.25	24	35		12	13	M6 × 1.0	25	58	1/4	12	16	39	105	18	44.4	77	38	4	22	30	160	44	135
50	20	M16 × 1.5	32	40	+0.16	16	16	M8 × 1.25	27	70	1/4	15	21	39	106	21	57.1	78	46.5	4	29	37	170	51	143
63	20	M16 × 1.5	32	45	−0.08	16	16	M8 × 1.25	32	85	3/8	15	21	46	121	23	69.9	89	56.5	4	29	37	190	53	158
80	25	M20 × 1.5	40	45		20	21	M10 × 1.5	36	105	3/8	18	25	48	128	28	88.9	96	72	4	35	46	210	62	174
100	32	M20 × 1.5	40	55		20	21	M10 × 1.5	41	130	1/2	18	25	51	138	30	108.0	102	89	4	38	51	230	69	189
125	32	M27 × 2.0	54	60	+0.19	30	27	M12 × 1.75	50	157	1/2	25	37	62	160	40	133.3	124	110	6	50	65	275	83	225
160	40	M36 × 2.0	72	65	−0.10	35	36	M16 × 2.0	55	195	3/4	30	43	70	180	44	158.8	130	140	6	60	80	315	105	260
200	40	M36 × 2.0	72	75		35	36	M16 × 2.0	60	238	3/4	30	43	70	180	47	212.7	130	175	6	70	95	335	120	275
250	50	M42 × 2.0	84	90	+0.22	40	46	M20 × 2.5	70	290	1	35	49	70	200	53	266.7	138	220	10	80	105	375	136	305
320	50	M48 × 2.0	96	110	−0.12	50	46	M24 × 3.0	80	353	1	45	60	75	220	63	317.5	158	270	10	90	120	420	151	340

FILE: 6.30_ILM30S2.dwg REV: 02/09/2010

27650 Groesbeck Hwy • Roseville, MI 48066-2759 • Phone 586.775.7211 • Fax 586.775.4545 • Toll Free 800.526.7968 • e-mail: sales@peninsularcylinders.com • www.peninsularcylinders.com

"PUSH" & "PULL" Force Charts - Pneumatic Cylinders

for Peninsular - Series ILM - Medium-Duty, METRIC Air Cylinders

"PUSH" - (EXTENDED CYLINDER STROKE) FORCES IN POUNDS & KILOGRAMS

Bore in MM	Bore Size Inches	Air Line Pressure (PSI and Bars)													
		PSI	60	65	70	75	80	85	90	95	100	105	110	115	120
		BARS	4.1	4.5	4.8	5.2	5.5	5.9	6.2	6.6	6.9	7.2	7.6	7.9	8.3
32	1 ¼	LBs	74	80	86	92	98	104	110	117	123	129	135	141	147
		KGs	33	36	39	42	45	47	50	53	56	58	61	64	67
40	1 ½	LBs	106	115	124	133	141	150	159	168	177	186	194	203	212
		KGs	48	52	56	60	64	68	72	76	80	84	88	92	96
50	2	LBs	188	204	220	236	251	267	283	298	314	330	346	361	377
		KGs	86	93	100	107	114	121	128	135	143	150	157	164	171
63	2 ½	LBs	295	319	344	368	393	417	442	466	491	515	540	565	589
		KGs	134	145	156	167	178	189	200	212	223	234	245	256	267
80	3 ¼	LBs	498	539	581	622	664	705	747	788	830	871	913	954	995
		KGs	226	245	263	282	301	320	339	357	376	395	414	433	452
100	4	LBs	754	817	880	942	1005	1068	1131	1194	1257	1319	1382	1445	1508
		KGs	342	371	399	428	456	485	513	542	570	599	627	656	684
125	5	LBs	1178	1276	1374	1473	1571	1669	1767	1865	1964	2062	2160	2258	2356
		KGs	534	579	623	668	713	757	802	846	891	935	980	1024	1069
160	6	LBs	1696	1838	1979	2121	2262	2403	2545	2686	2827	2969	3110	3252	3393
		KGs	770	834	898	962	1026	1090	1154	1218	1283	1347	1411	1475	1539
200	8	LBs	3016	3267	3519	3770	4021	4273	4524	4775	5027	5278	5529	5781	6032
		KGs	1368	1482	1596	1710	1824	1938	2052	2166	2280	2394	2508	2622	2736
250	10	LBs	4712	5105	5498	5891	6283	6676	7069	7461	7854	8247	8639	9032	9425
		KGs	2138	2316	2494	2672	2850	3028	3206	3384	3563	3741	3919	4097	4275
320	12	LBs	6786	7351	7917	8482	9048	9613	10179	10744	11310	11875	12441	13006	13572
		KGs	3078	3335	3591	3848	4104	4361	4617	4874	5130	5387	5643	5900	6156

English
Metric

Note: "Push" Forces in Pounds = (Cylinder Bore Diameter)^2 x .7854 x Line Pressure

Rev. 2/9/2010

"PUSH" & "PULL" Force Charts - Pneumatic Cylinders

for Peninsular - Series ILM - Medium-Duty, METRIC Air Cylinders

"PULL" - RETRACTED CYLINDER STROKE) FORCES IN POUNDS & KILOGRAMS

Bore in MM	Bore Size Inches	Rod DIA MM	Air Line Pressure (PSI and Bars)												
			PSI	60	65	70	75	80	85	90	95	100	105	110	115	120
			BARS	4.1	4.5	4.8	5.2	5.5	5.9	6.2	6.6	6.9	7.2	7.6	7.9	8.3
32	1 ¼	12	LBs	55	60	64	69	74	78	83	87	92	97	101	106	110
			KGs	25	27	29	31	33	35	38	40	42	44	46	48	50
40	1 ½	16	LBs	88	95	102	110	117	124	131	139	146	153	161	168	175
			KGs	40	43	46	50	53	56	60	63	66	70	73	76	79
50	2	20	LBs	152	165	178	191	203	216	229	241	254	267	279	292	305
			KGs	69	75	81	86	92	98	104	109	115	121	127	133	138
63	2 ½	20	LBs	247	268	289	309	330	350	371	392	412	433	454	474	495
			KGs	112	122	131	140	150	159	168	178	187	196	206	215	224
80	3 ¼	25	LBs	451	488	526	563	601	638	676	713	751	789	826	864	901
			KGs	204	221	238	256	273	290	307	324	341	358	375	392	409
100	4	32	LBs	680	737	794	850	907	964	1021	1077	1134	1191	1247	1304	1361
			KGs	309	334	360	386	411	437	463	489	514	540	566	591	617
125	5	32	LBs	1104	1197	1289	1381	1473	1565	1657	1749	1841	1933	2025	2117	2209
			KGs	501	543	584	626	668	710	751	793	835	877	918	960	1002
160	6	40	LBs	1552	1681	1811	1940	2070	2199	2328	2458	2587	2716	2846	2975	3104
			KGs	704	763	821	880	939	997	1056	1115	1173	1232	1291	1349	1408
200	8	40	LBs	2872	3111	3350	3590	3829	4068	4307	4547	4786	5025	5265	5504	5743
			KGs	1303	1411	1520	1628	1737	1845	1954	2062	2171	2279	2388	2497	2605
250	10	50	LBs	4524	4901	5278	5655	6032	6409	6786	7163	7540	7917	8294	8671	9048
			KGs	2052	2223	2394	2565	2736	2907	3078	3249	3420	3591	3762	3933	4104
320	12	50	LBs	6597	7147	7697	8247	8796	9346	9896	10446	10996	11545	12095	12645	13195
			KGs	2993	3242	3491	3741	3990	4239	4489	4738	4988	5237	5486	5736	5985

English
Metric

Note: "Pull" Forces in Pounds = (Cylinder Bore Diameter)^2 - (Cylinder Rod Diameter)^2 x .7854 x Line Pressure

Rev. 2/9/2010

PENINSULAR®
CYLINDER CO.

Section 7

Table of Contents

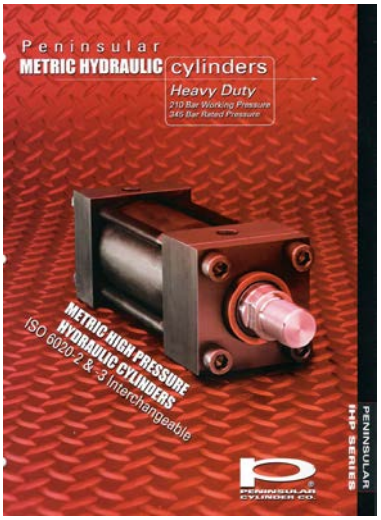

Model IHP - *METRIC, High Pressure Hydraulic Cylinders*

Our Red Model IHP - FAB Brochure - contains information about :

- ***FEATURES, ADVANTAGES & BENEFITS of the Model IHP Hydraulic Cylinder***
- ***HOW TO ORDER the Model IHP METRIC High-Pressure Hydraulic Cylinder***

Model IHP - Hydraulic Cylinder Dimensional Data

Page 7.00 IHP 0 — No Mount Single Rod (Available for Front or Rear Flush Mounts) (MX0)	Page 7.07 IHP 7 — Cap Trunnion (MT2)	Page 7.18 IHP 18 — Cap Square Flange (MF6)
Page 7.01 IHP 1 — Foot Side Lugs (MS2)	Page 7.08 IHP 8 — Head Tie Rod Extended (MX3)	Page 7.22 IHP 22 — Cap-Fixed Spherical Eye (MP5)
Page 7.02 IHP 2 — Head Trunnion (MT1)	Page 7.11 IHP 11 — Cap Tie Rod Extended (MX2)	Page 7.25 IHP 25 — Cap Fixed Eye (MP3)
Page 7.03 IHP 3 — Cap Fixed Clevis (MP1)	Page 7.12 IHP 12 — Head & Cap Tie Rod Extended (MX1)	Page 7.28 IHP 28 — Head Rectangular (ME5)
Page 7.06 IHP 6 — Intermediate Trunnion (MT4)	Page 7.17 IHP 17 — Head Square Flange (MF5)	Page 7.29 IHP 29 — Cap Rectangular (ME6)

Pages 7.30 & 7.31

Cylinder "Push" & "Pull" Force Charts:
(use to select the correct cylinder Bore Size)

www.peninsularcylinders.com

1-800-526-7968

27650 Groesbeck Highway * Roseville, Michigan 48066-2759
(586) 775-7211 * (586) 775-4545 fax * email: sales@peninsularcylinders.com

REV. 2/9/2010

NO MOUNT

PENINSULAR® CYLINDER COMPANY

METRIC HIGH PRESSURE HYDRAULIC CYLINDER
WORKING PRESSURE – 210 BAR (3000 PSI)

NOTE:
FOR OPTIONAL ROD THREADS CALL PENINSULAR.
FOR OPTIONAL PROXIMITY SWITCH CALL PENINSULAR.
U.S. PATENT NUMBERS: 4,726,282 AND D295,753.

*FOR PORT AND CUSHION POSITIONS REFER TO THE HOW TO ORDER PENINSULAR IHP SERIES HIGH PRESSURE METRIC HYDRAULIC CYLINDERS.

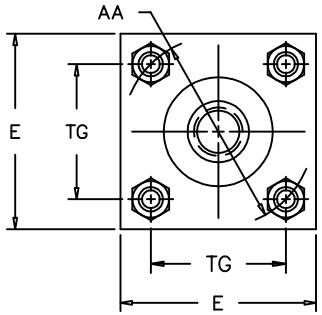

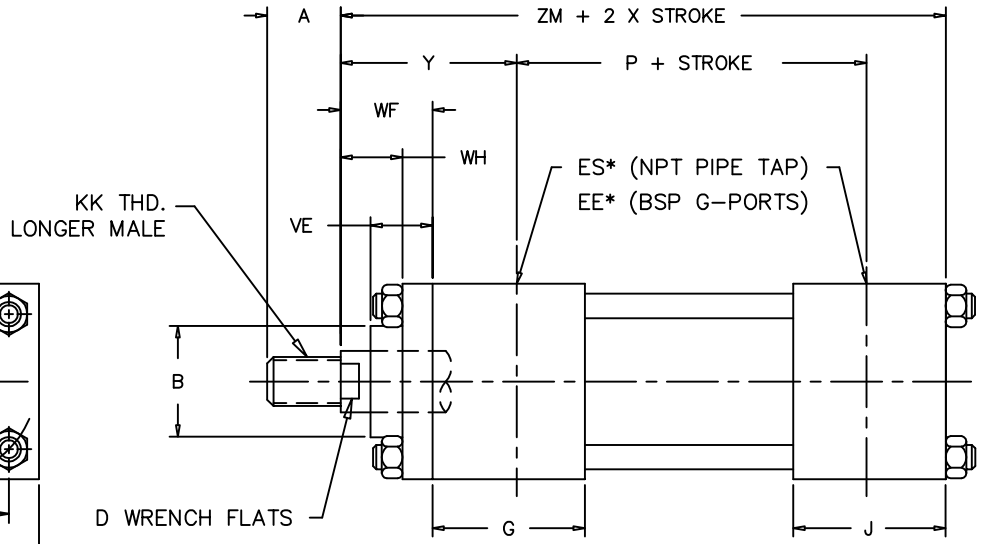

7.00

DIMENSIONS IN MILLIMETERS

BORE SIZE	ROD DIAMETER	PENINSULAR "L" STYLE SHOWN KK THD. LONGER MALE	A	AA	B	BB	D	DD	E	BSP G-PORT EE	NPT (INCHES) ES	G	J	P	TG	VE	WF	WH	Y	ZM
40.0	18.0	M14 x 1.5	18.0	59.0	30.0	35.0	15.0	M8 x 1	63.0	3/8	1/2"	45.0	38.0	73.0	41.7	16.0	35.0	25.0	62.0	195.0
	28.0	M20 x 1.5	28.0		42.0		22.0									22.0				
50.0	22.0	M16 x 1.5	22.0	74.0	34.0	46.0	18.0	M12 x 1.25	75.0	1/2	1/2"	45.0	38.0	74.0	52.3	22.0	41.0	25.0	67.0	207.0
	28.0	M20 x 1.5	28.0		42.0		22.0									22.0				
	36.0	M27 x 2	36.0		50.0		30.0									25.0				
63.0	28.0	M20 x 1.5	28.0	91.0	42.0	46.0	22.0	M12 x 1.25	90.0	1/2	1/2"	45.0	38.0	80.0	64.3	22.0	48.0	32.0	71.0	223.0
	36.0	M27 x 2	36.0		50.0		30.0									25.0				
	45.0	M33 x 2	45.0		60.0		39.0									29.0				
80.0	36.0	M27 x 2	36.0	117.0	50.0	59.0	30.0	M16 x 1.5	115.0	3/4	3/4"	50.0	45.0	93.0	82.7	25.0	51.0	31.0	77.0	246.0
	45.0	M33 x 2	45.0		60.0		39.0									29.0				
	56.0	M42 x 2	56.0		72.0		48.0									29.0				
100.0	45.0	M33 x 2	45.0	137.0	60.0	59.0	39.0	M16 x 1.5	130.0	3/4	3/4"	50.0	45.0	101.0	96.9	29.0	57.0	35.0	82.0	265.0
	56.0	M42 x 2	56.0		72.0		48.0									29.0				
	70.0	M48 x 2	63.0		88.0		62.0									32.0				
125.0	56.0	M42 x 2	56.0	178.0	72.0	81.0	48.0	M22 x 1.5	165.0	1	3/4"	58.0	58.0	117.0	125.9	29.0	57.0	35.0	86.0	289.0
	70.0	M48 x 2	63.0		88.0		62.0									32.0				
	90.0	M64 x 3	85.0		108.0		80.0									32.0				
160.0	70.0	M48 x 2	63.0	219.0	88.0	92.0	62.0	M27 x 2	205.0	1	1"	58.0	58.0	130.0	154.9	32.0	57.0	32.0	86.0	302.0
	90.0	M64 x 3	85.0		108.0		80.0									32.0				
	110.0	M80 x 3	95.0		133.0		100.0									32.0				
200.0	90.0	M64 x 3	85.0	269.0	108.0	115.0	80.0	M30 x 2	245.0	1 1/4	1 1/2"	76.0	76.0	165.0	190.2	32.0	57.0	32.0	98.0	356.0
	110.0	M80 x 3	95.0		133.0		100.0									32.0				
	140.0	M100 x 3	112.0		163.0		128.0									32.0				

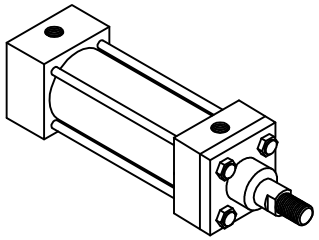

IHP 0 (MX0)

ISO 6020-2

FILE: 7.00_IHP00S2.dwg REV: 02/09/2010

27650 Groesbeck Hwy • Roseville, MI 48066-2759 • Phone 586.775.7211 • Fax 586.775.4545 • Toll Free 800.526.7968 • e-mail: sales@peninsularcylinders.com • www.peninsularcylinders.com

FOOT SIDE LUG

PENINSULAR® CYLINDER COMPANY

METRIC HIGH PRESSURE HYDRAULIC CYLINDER
WORKING PRESSURE – 210 BAR (3000 PSI)

NOTE:
FOR OPTIONAL ROD THREADS CALL PENINSULAR.
FOR OPTIONAL PROXIMITY SWITCH CALL PENINSULAR.
U.S. PATENT NUMBERS: 4,726,282 AND D295,753.

*FOR PORT AND CUSHION POSITIONS REFER TO THE HOW TO ORDER PENINSULAR IHP SERIES HIGH PRESSURE METRIC HYDRAULIC CYLINDERS.

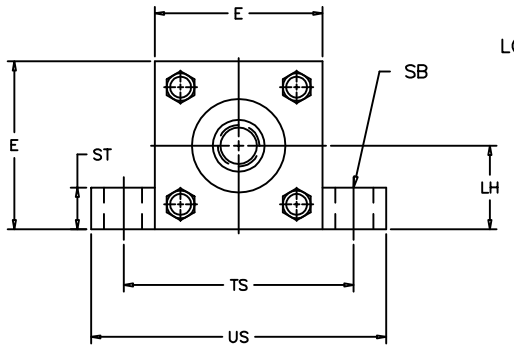

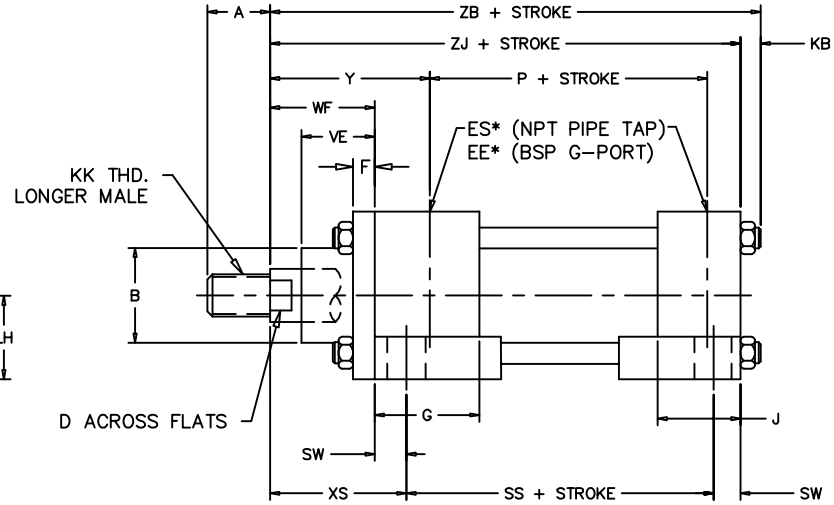

7.01

DIMENSIONS IN MILLIMETERS

BORE SIZE	ROD DIAMETER	PENINSULAR "L" STYLE SHOWN KK THD. LONGER MALE	A	B	D	E	BSP G–PORT EE	NPT (INCHES) ES	F	G	J	KB	LH	P	SB	SS	ST	SW	TS	US	VE	WF	XS	Y	ZB	ZJ
40.0	18.0	M14 x 1.5	18.0	30.0	15.0	63.0	3/8	1/2	10.0	45.0	38.0	6.5	31.0	73.0	11.0	98.0	12.5	10.0	83.0	103.0	16.0	35.0	45.0	62.0	166.0	153.0
	28.0	M20 x 1.5	28.0	42.0	22.0																22.0					
50.0	22.0	M16 x 1.5	22.0	34.0	18.0	75.0	1/2	1/2"	16.0	45.0	38.0	10.0	37.0	74.0	14.0	92.0	19.0	13.0	102.0	127.0	22.0	41.0	54.0	67.0	176.0	159.0
	28.0	M20 x 1.5	28.0	42.0	22.0																22.0					
	36.0	M27 x 2	36.0	50.0	30.0																25.0					
63.0	28.0	M20 x 1.5	28.0	42.0	22.0	90.0	1/2	1/2	16.0	45.0	38.0	10.0	44.0	80.0	18.0	86.0	26.0	17.0	124.0	161.0	22.0	48.0	65.0	71.0	185.0	168.0
	36.0	M27 x 2	36.0	50.0	30.0																25.0					
	45.0	M33 x 2	45.0	60.0	39.0																29.0					
80.0	36.0	M27 x 2	36.0	50.0	30.0	115.0	3/4	3/4	20.0	50.0	45.0	13.0	57.0	93.0	18.0	105.0	26.0	17.0	149.0	186.0	25.0	51.0	68.0	77.0	212.0	190.0
	45.0	M33 x 2	45.0	60.0	39.0																29.0					
	56.0	M42 x 2	56.0	72.0	48.0																29.0					
100.0	45.0	M33 x 2	45.0	60.0	39.0	130.0	3/4	3/4"	22.0	50.0	45.0	13.0	63.0	101.0	26.0	102.0	32.0	22.0	172.0	216.0	29.0	57.0	79.0	82.0	225.0	203.0
	56.0	M42 x 2	56.0	72.0	48.0																29.0					
	70.0	M48 x 2	63.0	88.0	62.0																32.0					
125.0	56.0	M42 x 2	56.0	72.0	48.0	165.0	1	3/4"	22.0	58.0	58.0	18.0	82.0	117.0	26.0	131.0	32.0	22.0	210.0	254.0	29.0	57.0	79.0	86.0	260.0	232.0
	70.0	M48 x 2	63.0	88.0	62.0																32.0					
	90.0	M64 x 3	85.0	108.0	80.0																32.0					
160.0	70.0	M48 x 2	63.0	88.0	62.0	205.0	1	1"	25.0	58.0	58.0	22.0	101.0	130.0	33.0	130.0	38.0	29.0	260.0	318.0	32.0	57.0	86.0	86.0	279.0	245.0
	90.0	M64 x 3	85.0	108.0	80.0																32.0					
	110.0	M80 x 3	95.0	133.0	100.0																32.0					
200.0	90.0	M64 x 3	85.0	108.0	80.0	245.0	1 1/4	1 1/2"	25.0	76.0	76.0	24.0	122.0	165.0	39.0	172.0	44.0	35.0	311.0	381.0	32.0	57.0	92.0	98.0	336.0	299.0
	110.0	M80 x 3	95.0	133.0	100.0																32.0					
	140.0	M100 x 3	112.0	163.0	128.0																32.0					

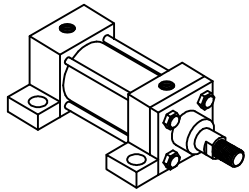

IHP 1 (MS2)

ISO 6020–2

FILE: 7.01_IHP01S2.dwg REV: 02/09/2010

27650 Groesbeck Hwy • Roseville, MI 48066–2759 • Phone 586.775.7211 • Fax 586.775.4545 • Toll Free 800.526.7968 • e–mail: sales@peninsularcylinders.com • www.peninsularcylinders.com

FRONT TRUNNION

PENINSULAR® CYLINDER COMPANY

METRIC HIGH PRESSURE HYDRAULIC CYLINDER
WORKING PRESSURE – 210 BAR (3000 PSI)

NOTE:
FOR OPTIONAL ROD THREADS CALL PENINSULAR.
FOR OPTIONAL PROXIMITY SWITCH CALL PENINSULAR.
U.S. PATENT NUMBERS: 4,726,282 AND D295,753.

*FOR PORT AND CUSHION POSITIONS REFER TO THE HOW TO ORDER PENINSULAR IHP SERIES HIGH PRESSURE METRIC HYDRAULIC CYLINDERS.

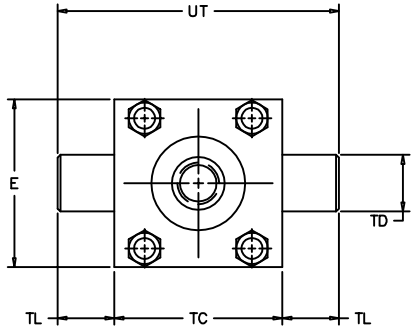

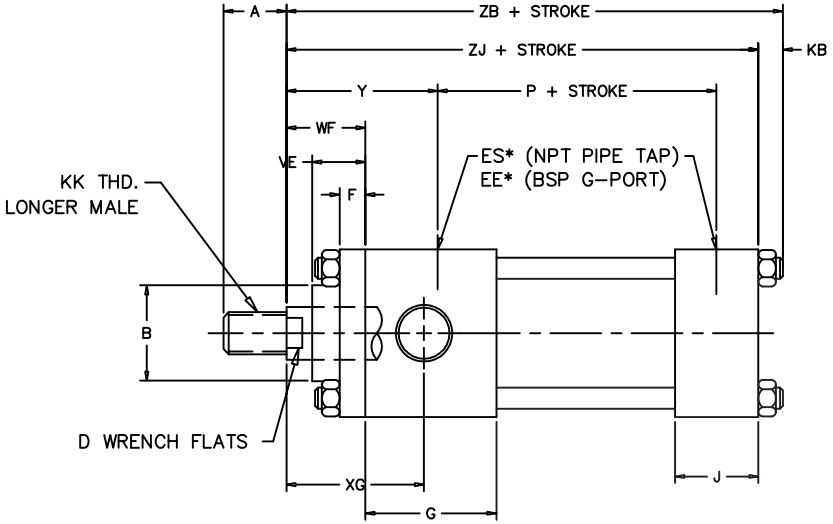

DIMENSIONS IN MILLIMETERS

BORE SIZE	ROD DIAMETER	PENINSULAR "L" STYLE SHOWN KK THD. LONGER MALE	A	B	D	E	BSP G–PORT EE	NPT (INCHES) ES	F	G	J	KB	P	TC	TD	TL	UT	VE	WF	XG	Y	ZB	ZJ
40.0	18.0	M14 x 1.5	18.0	30.0	15.0	63.0	3/8	1/2	10.0	45.0	38.0	6.5	73.0	63.0	20.0	16.0	95.0	16.0	35.0	57.0	62.0	166.0	153.0
	28.0	M20 x 1.5	28.0	42.0	22.0													22.0					
50.0	22.0	M16 x 1.5	22.0	34.0	18.0	75.0	1/2	1/2"	16.0	45.0	38.0	10.0	74.0	76.0	25.0	20.0	116.0	22.0	41.0	64.0	67.0	176.0	159.0
	28.0	M20 x 1.5	28.0	42.0	22.0													22.0					
	36.0	M27 x 2	36.0	50.0	30.0													25.0					
63.0	28.0	M20 x 1.5	28.0	42.0	22.0	90.0	1/2	1/2	16.0	45.0	38.0	10.0	80.0	89.0	32.0	25.0	139.0	22.0	48.0	70.0	71.0	185.0	168.0
	36.0	M27 x 2	36.0	50.0	30.0													25.0					
	45.0	M33 x 2	45.0	60.0	39.0													29.0					
80.0	36.0	M27 x 2	36.0	50.0	30.0	115.0	3/4	3/4	20.0	50.0	45.0	13.0	93.0	114.0	40.0	32.0	178.0	25.0	51.0	76.0	77.0	212.0	190.0
	45.0	M33 x 2	45.0	60.0	39.0													29.0					
	56.0	M42 x 2	56.0	72.0	48.0													29.0					
100.0	45.0	M33 x 2	45.0	60.0	39.0	130.0	3/4	3/4"	22.0	50.8	45.0	13.0	101.0	127.0	50.0	40.0	207.0	29.0	57.0	82.4	82.0	225.0	203.0
	56.0	M42 x 2	56.0	72.0	48.0													29.0					
	70.0	M48 x 2	63.0	88.0	62.0													32.0					
125.0	56.0	M42 x 2	56.0	72.0	48.0	165.0	1	3/4"	22.0	73.0	58.0	18.0	113.0	165.0	63.0	50.0	265.0	29.0	57.0	97.1	90.0	260.0	232.0
	70.0	M48 x 2	63.0	88.0	62.0													32.0					
	90.0	M64 x 3	85.0	108.0	80.0													32.0					
160.0	70.0	M48 x 2	63.0	88.0	62.0	205.0	1	1"	25.0	82.5	58.0	22.0	132.0	203.0	80.0	63.0	329.0	32.0	57.0	100.0	84.0	279.0	245.0
	90.0	M64 x 3	85.0	108.0	80.0													32.0					
	110.0	M80 x 3	95.0	133.0	100.0													32.0					
200.0	90.0	M64 x 3	85.0	108.0	80.0	245.0	1 1/4	1 1/2"	25.0	101.6	76.0	24.0	167.0	241.0	100.0	80.0	401.0	32.0	57.0	108.6	96.0	336.0	299.0
	110.0	M80 x 3	95.0	133.0	100.0													32.0					
	140.0	M100 x 3	112.0	163.0	128.0													32.0					

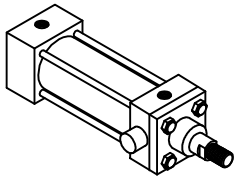

IHP 2 (MT1)

ISO 6020–2

7.02

FILE: 7.02_IHP02S2.dwg REV: 02/09/2010

27650 Groesbeck Hwy • Roseville, MI 48066–2759 • Phone 586.775.7211 • Fax 586.775.4545 • Toll Free 800.526.7968 • e-mail: sales@peninsularcylinders.com • www.peninsularcylinders.com

FRONT TRUNNION

PENINSULAR® CYLINDER COMPANY

METRIC HIGH PRESSURE HYDRAULIC CYLINDER
LARGE BORE SERIES – ISO 6020–3
WORKING PRESSURE – 160 BAR (2320 PSI)
RATED PRESSURE – 250 BAR (3625 PSI)

NOTE:

FOR OTHER ROD END THREADS, REFER TO THE HOW TO ORDER SERIES IHP HIGH PRESSURE HYDRAULIC CYLINDERS (LARGE BORE SERIES) INFORMATION GUIDE. FOR SENSING OPTIONS CONTACT PENINSULAR.

*FOR PORT AND CUSHION POSITIONS, REFER TO THE HOW TO ORDER SERIES IHP HIGH PRESSURE HYDRAULIC CYLINDERS (LARGE BORE SERIES) INFORMATION GUIDE.

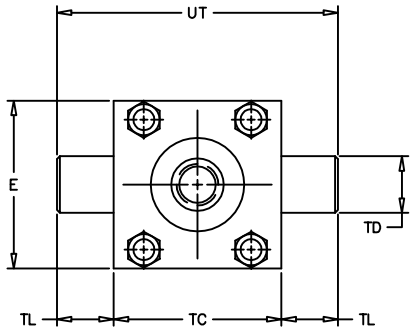

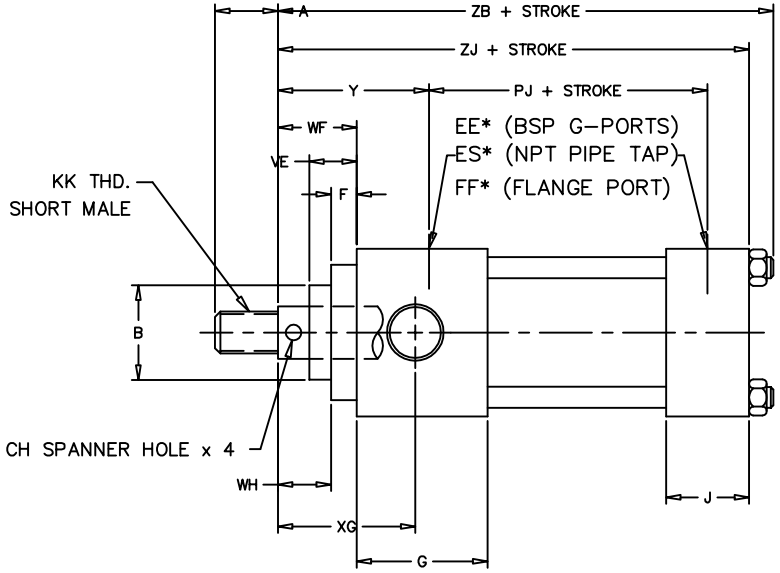

7.02

BORE SIZE	ROD DIAMETER	PENINSULAR "M" STYLE SHOWN KK THD. SHORT MALE	A	B f9	CH	E	G PORT EE	NPT (INCHES) ES	FLANGE PORT FF **	F	G	J	PJ	TC	TD f8	TL	UT	VE	WF	WH	XG	Y	ZB	ZJ
250	140.0	M100 x 3	112.0	163.0	15.0	320.0	1 1/2"	2"	DN 51	25.0	136.0	94.0	216.0	320.0	125.0	100.0	520.0	83.0	110.0	85.0	178.0	157.0	495.0	462.0
	160.0	M110 x 3	112.0	185.0																				
	180.0	M125 x 4	125.0	205.0																				
320	180.0	M125 x 4	125.0	205.0	15.0	400.0	1 1/2"	2 1/2"	DN 64	35.0	170.0	114.0	251.0	400.0	160.0	125.0	650.0	83.0	110.0	75.0	195.0	167.0	565.0	531.0
	200.0	M140 x 4	140.0	225.0																				
	220.0	M160 x 4	160.0	245.0																				
360	180.0	M125 x 4	125.0	205.0	15.0	450.0	2"	2 1/2"	DN 64	42.0	190.0	124.0	296.0	450.0	180.0	145.0	740.0	83.0	110.0	68.0	205.0	172.0	634.0	595.0
	220.0	M160 x 4	160.0	245.0																				
	250.0	M180 x 4	180.0	275.0																				
400	220.0	M160 x 4	160.0	245.0	15.0	500.0	2"	2 1/2"	DN 64	50.0	206.5	150.0	320.0	500.0	200.0	160.0	820.0	83.0	110.0	60.0	215.0	185.0	676.0	636.5
	250.0	M180 x 4	180.0	275.0																				
	280.0	M200 x 4	200.0	305.0																				
500	280.0	M200 x 4	200.0	305.0	15.0	630.0	2"	2 1/2"	DN 64	70.0	260.0	200.0	400.0	630.0	250.0	200.0	1030.0	83.0	110.0	40.0	240.0	210.0	810.0	770.0
	320.0	M220 x 4	220.0	345.0																				
	360.0	M250 x 6	250.0	385.0																				

DIMENSIONS IN MILLIMETERS

** PER ISO 6162

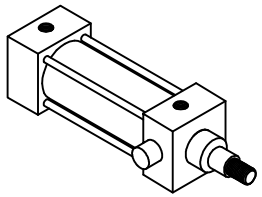

IHP 2 (MT1)

ISO 6020–3

FILE: 7.02_IHP02L2.dwg REV: 02/09/2010

27650 Groesbeck Hwy • Roseville, MI 48066–2759 • Phone 586.775.7211 • Fax 586.775.4545 • Toll Free 800.526.7968 • e–mail: sales@peninsularcylinders.com • www.peninsularcylinders.com

FIXED REAR CLEVIS

PENINSULAR® CYLINDER COMPANY

METRIC HIGH PRESSURE HYDRAULIC CYLINDER
WORKING PRESSURE – 210 BAR (3000 PSI)

NOTE:
FOR OPTIONAL ROD THREADS CALL PENINSULAR.
FOR OPTIONAL PROXIMITY SWITCH CALL PENINSULAR.
U.S. PATENT NUMBERS: 4,726,282 AND D295,753.

*FOR PORT AND CUSHION POSITIONS REFER TO THE HOW TO ORDER PENINSULAR IHP SERIES HIGH PRESSURE METRIC HYDRAULIC CYLINDERS.

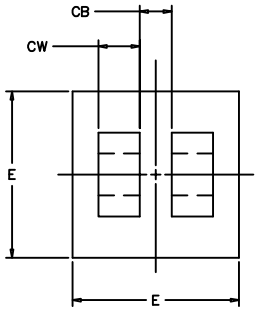

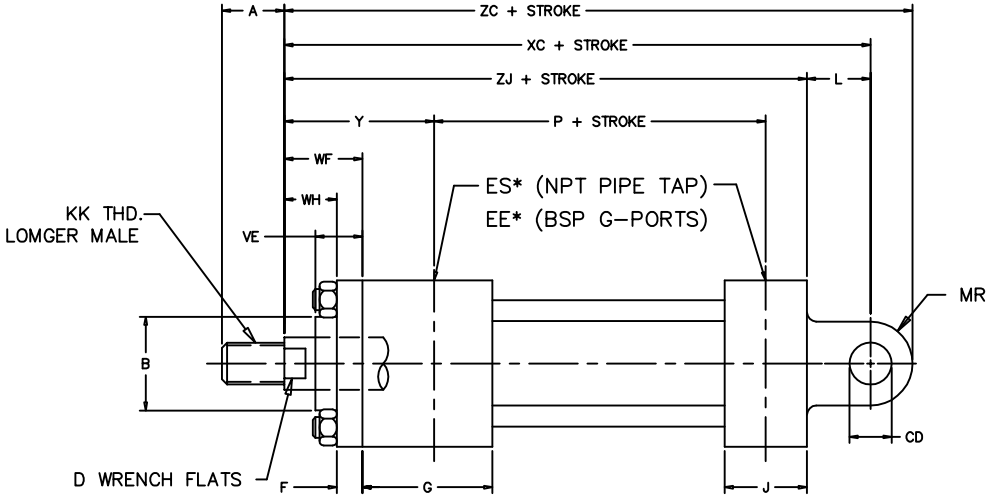

7.03

PENINSULAR "L" STYLE SHOWN

DIMENSIONS IN MILLIMETERS

BORE SIZE	ROD DIAMETER	KK THD. LONGER MALE	A	B	CB	CD	CW	D	E	BSP G–PORT EE	NPT (INCHES) ES	F	G	J	L	MR	P	VE	WF	WH	XC	Y	ZC	ZJ
40.0	18.0	M14 x 1.5	18.0	30.0	20.0	14.0	10.0	15.0	63.0	3/8	1/2"	10.0	45.0	38.0	19.0	14.0	73.0	16.0	35.0	25.0	172.0	62.0	186.0	153.0
	28.0	M20 x 1.5	28.0	42.0				22.0										22.0						
50.0	22.0	M16 x 1.5	22.0	34.0	30.0	20.0	15.0	18.0	75.0	1/2	1/2"	16.0	45.0	38.0	32.0	20.0	74.0	22.0	41.0	25.0	191.0	67.0	211.0	159.0
	28.0	M20 x 1.5	28.0	42.0				22.0										22.0						
	36.0	M27 x 2	36.0	50.0				30.0										25.0						
63.0	28.0	M20 x 1.5	28.0	42.0	30.0	20.0	15.0	22.0	90.0	1/2	1/2"	16.0	45.0	38.0	32.0	20.0	80.0	22.0	48.0	32.0	200.0	71.0	220.0	168.0
	36.0	M27 x 2	36.0	50.0				30.0										25.0						
	45.0	M33 x 2	45.0	60.0				39.0										29.0						
80.0	36.0	M27 x 2	36.0	50.0	40.0	28.0	20.0	30.0	115.0	3/4	3/4"	20.0	50.0	45.0	39.0	28.0	93.0	25.0	51.0	31.0	229.0	77.0	257.0	190.0
	45.0	M33 x 2	45.0	60.0				39.0										29.0						
	56.0	M42 x 2	56.0	72.0				48.0										29.0						
100.0	45.0	M33 x 2	45.0	60.0	50.0	36.0	25.0	39.0	130.0	3/4	3/4"	22.0	50.0	45.0	54.0	36.0	101.0	29.0	57.0	35.0	257.0	82.0	293.0	203.0
	56.0	M42 x 2	56.0	72.0				48.0										29.0						
	70.0	M48 x 2	63.0	88.0				62.0										32.0						
125.0	56.0	M42 x 2	56.0	72.0	60.0	45.0	30.0	48.0	165.0	1	3/4"	22.0	58.0	58.0	57.0	45.0	117.0	29.0	57.0	35.0	289.0	86.0	334.0	232.0
	70.0	M48 x 2	63.0	88.0				62.0										32.0						
	90.0	M64 x 3	85.0	108.0				80.0										32.0						
160.0	70.0	M48 x 2	63.0	88.0	70.0	56.0	35.0	62.0	205.0	1	1"	25.0	58.0	58.0	63.0	56.0	130.0	32.0	57.0	32.0	308.0	86.0	364.0	245.0
	90.0	M64 x 3	85.0	108.0				80.0										32.0						
	110.0	M80 x 3	95.0	133.0				100.0										32.0						
200.0	90.0	M64 x 3	85.0	108.0	80.0	70.0	40.0	80.0	245.0	1 1/4	1 1/2"	25.0	76.0	76.0	82.0	70.0	165.0	32.0	57.0	32.0	381.0	98.0	451.0	299.0
	110.0	M80 x 3	95.0	133.0				100.0										32.0						
	140.0	M100 x 3	112.0	163.0				128.0										32.0						

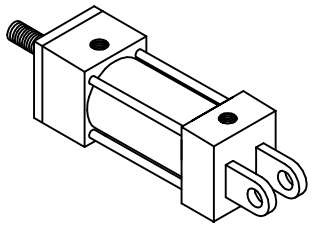

IHP 3 (MP1)

ISO 6020–2

FILE: 7.03_IHP03S2.dwg REV: 02/09/2010

27650 Groesbeck Hwy • Roseville, MI 48066–2759 • Phone 586.775.7211 • Fax 586.775.4545 • Toll Free 800.526.7968 • e-mail: sales@peninsularcylinders.com • www.peninsularcylinders.com

FIXED REAR CLEVIS

PENINSULAR® CYLINDER COMPANY

METRIC HIGH PRESSURE HYDRAULIC CYLINDER
LARGE BORE SERIES – ISO 6020–3
WORKING PRESSURE – 160 BAR (2320 PSI)
RATED PRESSURE – 250 BAR (3625 PSI)

NOTE:

FOR OTHER ROD END THREADS, REFER TO THE HOW TO ORDER SERIES IHP HIGH PRESSURE HYDRAULIC CYLINDERS (LARGE BORE SERIES) INFORMATION GUIDE. FOR SENSING OPTIONS CONTACT PENINSULAR.

*FOR PORT AND CUSHION POSITIONS, REFER TO THE HOW TO ORDER SERIES IHP HIGH PRESSURE HYDRAULIC CYLINDERS (LARGE BORE SERIES) INFORMATION GUIDE.

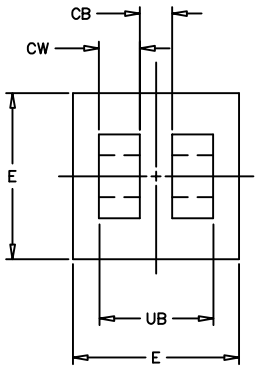

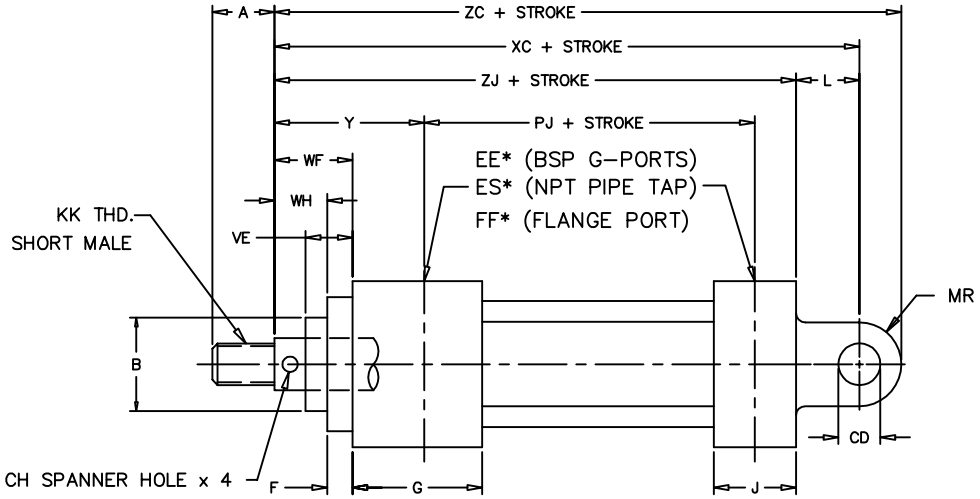

PENINSULAR "M" STYLE SHOWN

DIMENSIONS IN MILLIMETERS

BORE SIZE	ROD DIAMETER	KK THD. SHORT MALE	A	B f9	CB	CD	CH	CW	E	G PORT EE	NPT (INCHES) ES	FLANGE PORT FF **	F	G	J	L	MR	PJ	UB	VE	WF	WH	XC	Y	ZC	ZJ
250	140.0	M100 x 3	112.0	163.0	90.0	90.0	15.0	45.0	320.0	1 1/2"	2"	DN 51	25.0	94.0	94.0	125.0	100.0	216.0	180.0	83.0	110.0	85.0	545.0	157.0	645.0	420.0
	160.0	M110 x 3	112.0	185.0																						
	180.0	M125 x 4	125.0	205.0																						
320	180.0	M125 x 4	125.0	205.0	110.0	110.0	15.0	55.0	400.0	1 1/2"	2 1/2"	DN 64	35.0	114.0	114.0	152.0	120.0	251.0	220.0	83.0	110.0	75.0	627.0	167.0	747.0	475.0
	200.0	M140 x 4	140.0	225.0																						
	220.0	M160 x 4	160.0	245.0																						
360	180.0	M125 x 4	125.0	205.0	125.0	125.0	15.0	62.5	450.0	2"	2 1/2"	DN 64	42.0	124.0	124.0	175.0	140.0	296.0	250.0	83.0	110.0	68.0	705.0	172.0	845.0	530.0
	220.0	M160 x 4	160.0	245.0																						
	250.0	M180 x 4	180.0	275.0																						
400	220.0	M160 x 4	160.0	245.0	140.0	140.0	15.0	70.0	500.0	2"	2 1/2"	DN 64	50.0	150.0	150.0	195.0	160.0	320.0	280.0	83.0	110.0	60.0	775.0	185.0	935.0	580.0
	250.0	M180 x 4	180.0	275.0																						
	280.0	M200 x 4	200.0	305.0																						
500	280.0	M200 x 4	200.0	305.0	180.0	180.0	15.0	90.0	630.0	2"	2 1/2"	DN 64	70.0	200.0	200.0	250.0	200.0	400.0	360.0	83.0	110.0	40.0	960.0	210.0	1160.0	710.0
	360.0	M250 x 6	250.0	385.0																						

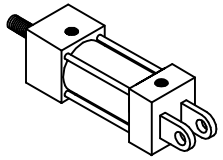

IHP 3 (MP1)

** PER ISO 6162

ISO 6020–3

FILE: 7.03_IHP03L2.dwg REV: 02/09/2010

27650 Groesbeck Hwy • Roseville, MI 48066–2759 • Phone 586.775.7211 • Fax 586.775.4545 • Toll Free 800.526.7968 • e-mail: sales@peninsularcylinders.com • www.peninsularcylinders.com

INTERMEDIATE TRUNNION

PENINSULAR® CYLINDER COMPANY

METRIC HIGH PRESSURE HYDRAULIC CYLINDER
WORKING PRESSURE – 210 BAR (3000 PSI)

NOTE:
FOR OPTIONAL ROD THREADS CALL PENINSULAR.
FOR OPTIONAL PROXIMITY SWITCH CALL PENINSULAR.
U.S. PATENT NUMBERS: 4,726,282 AND D295,753.

*FOR PORT AND CUSHION POSITIONS REFER TO THE HOW TO ORDER PENINSULAR IHP SERIES HIGH PRESSURE METRIC HYDRAULIC CYLINDERS.

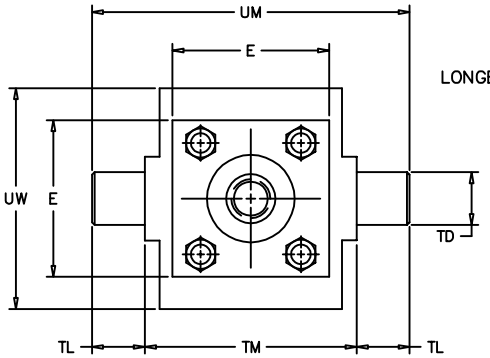

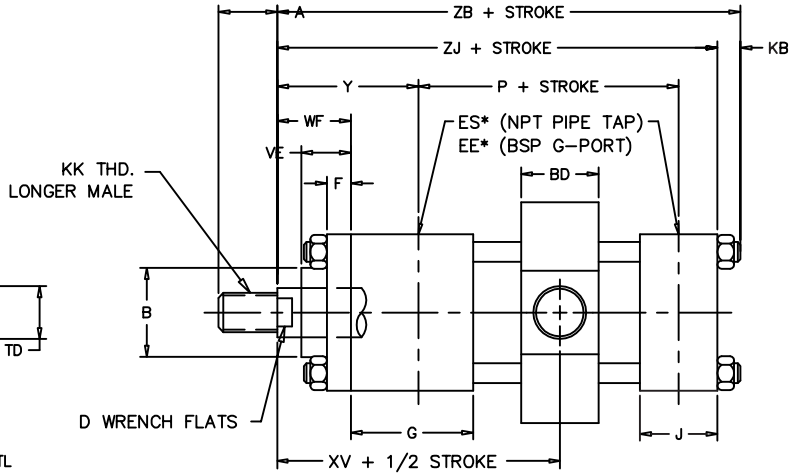

FOR CENTERED TRUNNION
– OR –
SPECIFY IF SPECIAL XV DIMENSION REQUIRED

7.06

DIMENSIONS IN MILLIMETERS

BORE SIZE	ROD DIAMETER	PENINSULAR "L" STYLE SHOWN KK THD. LONGER MALE	A	B	D	E	BSP G–PORT EE	NPT (INCHES) ES	F	G	J	KB	P	TD	TL	TM	UM	UW	VE	WF	BD	XV (MIN)	Y	ZB	ZJ	MINIMUM STROKE
40.0	18.0	M14 x 1.5	18.0	30.0	15.0	63.0	3/8	1/2"	10.0	45.0	38.0	6.5	73.0	20.0	16.0	76.0	108.0	101.0	16.0	35.0	30.0	97.0	62.0	166.0	153.0	10.0
	28.0	M20 x 1.5	28.0	42.0	22.0														22.0							
50.0	22.0	M16 x 1.5	22.0	34.0	18.0	76.0	1/2	1/2"	16.0	45.0	38.0	10.0	74.0	25.0	20.0	89.0	129.0	120.0	22.0	41.0	40.0	108.0	67.0	176.0	159.0	10.0
	28.0	M20 x 1.5	28.0	42.0	22.0														22.0							
	36.0	M27 x 2	36.0	50.0	30.0														25.0							
63.0	28.0	M20 x 1.5	28.0	42.0	22.0	90.0	1/2	1/2"	16.0	45.0	38.0	10.0	80.0	32.0	25.0	100.0	150.0	133.0	22.0	48.0	40.0	115.0	71.0	185.0	168.0	10.0
	36.0	M27 x 2	36.0	50.0	30.0														25.0							
	45.0	M33 x 2	45.0	60.0	39.0														29.0							
80.0	36.0	M27 x 2	36.0	50.0	30.0	115.0	3/4	3/4"	20.0	50.0	45.0	13.0	93.0	40.0	32.0	127.0	191.0	171.0	25.0	51.0	50.0	128.0	77.0	212.0	190.0	10.0
	45.0	M33 x 2	45.0	60.0	39.0														29.0							
	56.0	M42 x 2	56.0	72.0	48.0														29.0							
100.0	45.0	M33 x 2	45.0	60.0	39.0	130.0	3/4	3/4"	22.0	50.0	45.0	13.0	101.0	50.0	40.0	140.0	220.0	184.0	29.0	57.0	60.0	139.0	82.0	225.0	203.0	15.0
	56.0	M42 x 2	56.0	72.0	48.0														29.0							
	70.0	M48 x 2	63.0	88.0	62.0														32.0							
125.0	56.0	M42 x 2	56.0	72.0	48.0	165.0	1	3/4"	22.0	58.0	58.0	18.0	117.0	63.0	50.0	178.0	278.0	228.0	29.0	57.0	73.0	153.5	86.0	260.0	232.0	20.0
	70.0	M48 x 2	63.0	88.0	62.0														32.0							
	90.0	M64 x 3	85.0	108.0	80.0														32.0							
160.0	70.0	M48 x 2	63.0	88.0	62.0	205.0	1	1"	25.0	58.0	58.0	22.0	130.0	80.0	63.0	215.0	341.0	260.0	32.0	57.0	90.0	162.0	86.0	279.0	245.0	25.0
	90.0	M64 x 3	85.0	108.0	80.0														32.0							
	110.0	M80 x 3	95.0	133.0	100.0														32.0							
200.0	90.0	M64 x 3	85.0	108.0	80.0	245.0	1 1/4	1 1/2"	25.0	76.0	76.0	24.0	165.0	100.0	80.0	279.0	439.0	324.0	32.0	57.0	110.0	190.0	98.0	336.0	299.0	25.0
	110.0	M80 x 3	95.0	133.0	100.0														32.0							
	140.0	M100 x 3	112.0	163.0	128.0														32.0							

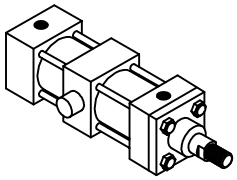

IHP 6 (MT4)

ISO 6020–2

FILE: 7.06_IHP06S2.dwg REV: 02/09/2010

27650 Groesbeck Hwy • Roseville, MI 48066–2759 • Phone 586.775.7211 • Fax 586.775.4545 • Toll Free 800.526.7968 • e-mail: sales@peninsularcylinders.com • www.peninsularcylinders.com

INTERMEDIATE TRUNNION

PENINSULAR® CYLINDER COMPANY

METRIC HIGH PRESSURE HYDRAULIC CYLINDER
LARGE BORE SERIES – ISO 6020–3
WORKING PRESSURE – 160 BAR (2320 PSI)
RATED PRESSURE – 250 BAR (3625 PSI)

NOTE:
FOR OTHER ROD END THREADS, REFER TO THE HOW TO ORDER SERIES IHP HIGH PRESSURE HYDRAULIC CYLINDERS (LARGE BORE SERIES) INFORMATION GUIDE. FOR SENSING OPTIONS CONTACT PENINSULAR.

*FOR PORT AND CUSHION POSITIONS, REFER TO THE HOW TO ORDER SERIES IHP HIGH PRESSURE HYDRAULIC CYLINDERS (LARGE BORE SERIES) INFORMATION GUIDE.

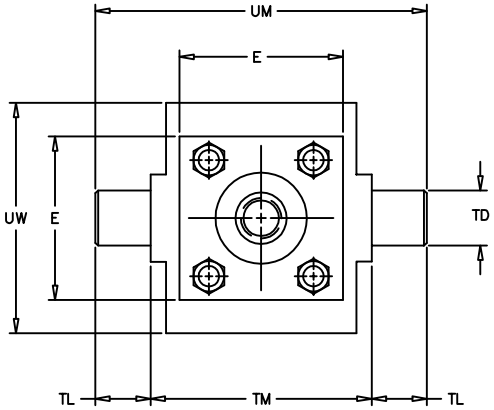

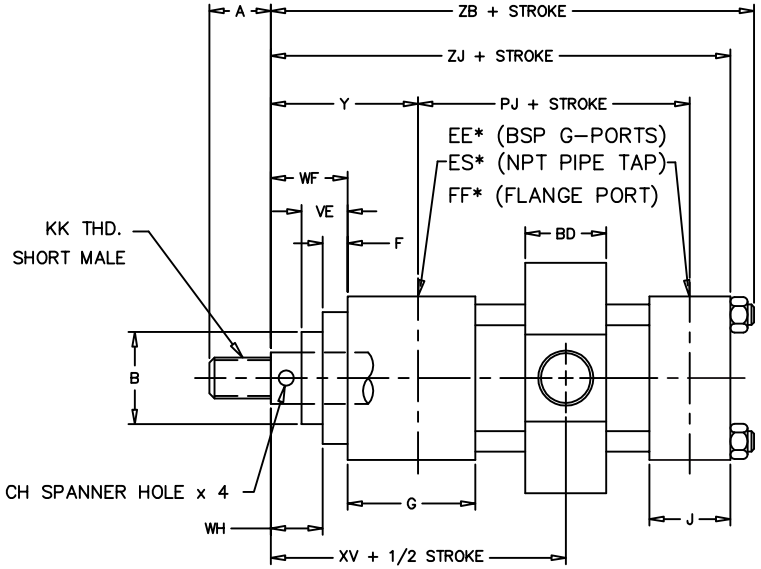

FOR CENTERED TRUNNION
– OR –
SPECIFY IF SPECIAL XV DIMENSION REQUIRED

PENINSULAR "M" STYLE SHOWN — G PORT — NPT (INCHES) — FLANGE PORT

DIMENSIONS IN MILLIMETERS

BORE SIZE	ROD DIAMETER	KK THD. SHORT MALE	A	B f9	BD	CH	E	EE	ES	FF **	F	G	J	PJ	TD f8	TL	TM	UM	UW (MAX)	VE	WF	WH	XV (MIN)	Y	ZB	ZJ	MINIMUM STROKE
250	140.0	M100 x 3	112.0	163.0	146.0	15.0	320.0	1 1/2"	2"	DN 51	25.0	94.0	94.0	216.0	125.0	100.0	380.0	580.0	480.0	83.0	110.0	85.0	279.0	157.0	505.0	420.0	28.0
	160.0	M110 x 3	112.0	185.0																							
	180.0	M125 x 4	125.0	205.0																							
320	180.0	M125 x 4	125.0	205.0	180.0	15.0	400.0	1 1/2"	2 1/2"	DN 64	35.0	114.0	114.0	251.0	160.0	125.0	485.0	735.0	600.0	83.0	110.0	75.0	316.0	167.0	580.0	475.0	47.0
	200.0	M140 x 4	140.0	225.0																							
	220.0	M160 x 4	160.0	245.0																							
360	180.0	M125 x 4	125.0	205.0	200.0	15.0	450.0	2"	2 1/2"	DN 64	42.0	124.0	124.0	296.0	180.0	145.0	545.0	835.0	675.0	83.0	110.0	68.0	336.0	172.0	640.0	530.0	32.0
	220.0	M160 x 4	160.0	245.0																							
	250.0	M180 x 4	180.0	275.0																							
400	220.0	M160 x 4	160.0	245.0	220.0	15.0	500.0	2"	2 1/2"	DN 64	50.0	150.0	150.0	320.0	200.0	160.0	605.0	925.0	750.0	83.0	110.0	60.0	372.0	185.0	685.0	580.0	54.0
	250.0	M180 x 4	180.0	275.0																							
	280.0	M200 x 4	200.0	305.0																							
500	280.0	M200 x 4	200.0	305.0	270.0	15.0	630.0	2"	2 1/2"	DN 64	70.0	200.0	200.0	400.0	250.0	200.0	745.0	1145.0	945.0	83.0	110.0	40.0	447.0	210.0	825.0	710.0	74.0
	320.0	M220 x 4	220.0	345.0																							
	360.0	M250 x 6	250.0	385.0																							

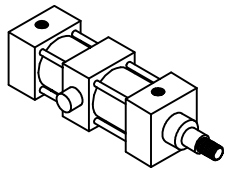

IHP 6 (MT4)

ISO 6020–3

** PER ISO 6162

FILE: 7.06_IHP06L2.dwg REV: 02/09/2010

27650 Groesbeck Hwy • Roseville, MI 48066–2759 • Phone 586.775.7211 • Fax 586.775.4545 • Toll Free 800.526.7968 • e-mail: sales@peninsularcylinders.com • www.peninsularcylinders.com

CAP TRUNNION

PENINSULAR® CYLINDER COMPANY

METRIC HIGH PRESSURE HYDRAULIC CYLINDER
WORKING PRESSURE – 210 BAR (3000 PSI)

NOTE:
FOR OPTIONAL ROD THREADS CALL PENINSULAR.
FOR OPTIONAL PROXIMITY SWITCH CALL PENINSULAR.
U.S. PATENT NUMBERS: 4,726,282 AND D295,753.

*FOR PORT AND CUSHION POSITIONS REFER TO THE HOW TO ORDER PENINSULAR IHP SERIES HIGH PRESSURE METRIC HYDRAULIC CYLINDERS.

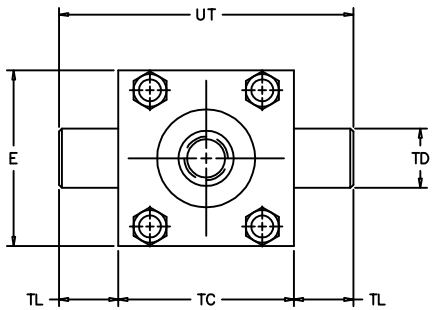

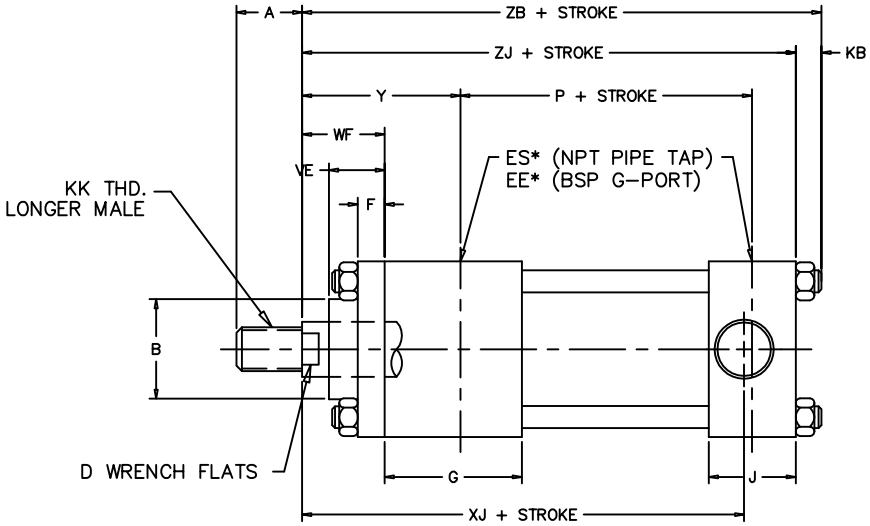

7.07

PENINSULAR "L" STYLE SHOWN

DIMENSIONS IN MILLIMETERS

BORE SIZE	ROD DIAMETER	KK THD. LONGER MALE	A	B	D	E	BSP G-PORT EE	NPT (INCHES) ES	F	G	J	KB	P	TC	TD	TL	UT	VE	WF	XJ	Y	ZB	ZJ
40.0	18.0	M14 x 1.5	18.0	30.0	15.0	63.0	3/8	1/2	10.0	45.0	38.0	6.5	73.0	63.0	20.0	16.0	95.0	16.0	35.0	134.0	62.0	166.0	153.0
	28.0	M20 x 1.5	28.0	42.0	22.0													22.0					
50.0	22.0	M16 x 1.5	22.0	34.0	18.0	75.0	1/2	1/2"	16.0	45.0	38.0	10.0	74.0	76.0	25.0	20.0	116.0	22.0	41.0	140.0	67.0	176.0	159.0
	28.0	M20 x 1.5	28.0	42.0	22.0													22.0					
	36.0	M27 x 2	36.0	50.0	30.0													25.0					
63.0	28.0	M20 x 1.5	28.0	42.0	22.0	90.0	1/2	1/2	16.0	45.0	38.0	10.0	80.0	89.0	32.0	25.0	139.0	22.0	48.0	149.0	71.0	185.0	168.0
	36.0	M27 x 2	36.0	50.0	30.0													25.0					
	45.0	M33 x 2	45.0	60.0	39.0													29.0					
80.0	36.0	M27 x 2	36.0	50.0	30.0	115.0	3/4	3/4	20.0	50.0	45.0	13.0	93.0	114.0	40.0	32.0	178.0	25.0	51.0	168.0	77.0	212.0	190.0
	45.0	M33 x 2	45.0	60.0	39.0													29.0					
	56.0	M42 x 2	56.0	72.0	48.0													29.0					
100.0	45.0	M33 x 2	45.0	60.0	39.0	130.0	3/4	3/4"	22.0	50.0	54.0	13.0	101.0	127.0	50.0	40.0	207.0	29.0	57.0	187.0	82.0	225.0	203.0
	56.0	M42 x 2	56.0	72.0	48.0													29.0					
	70.0	M48 x 2	63.0	88.0	62.0													32.0					
125.0	56.0	M42 x 2	56.0	72.0	48.0	165.0	1	3/4"	22.0	58.0	66.7	18.0	117.0	165.0	63.0	50.0	265.0	29.0	57.0	209.0	86.0	260.0	232.0
	70.0	M48 x 2	63.0	88.0	62.0													32.0					
	90.0	M64 x 3	85.0	108.0	80.0													32.0					
160.0	70.0	M48 x 2	63.0	88.0	62.0	205.0	1	1"	25.0	58.0	84.0	22.0	130.0	203.0	80.0	63.0	329.0	32.0	57.0	230.0	86.0	279.0	245.0
	90.0	M64 x 3	85.0	108.0	80.0													32.0					
	110.0	M80 x 3	95.0	133.0	100.0													32.0					
200.0	90.0	M64 x 3	85.0	108.0	80.0	245.0	1 1/4	1 1/2"	25.0	76.0	103.0	24.0	165.0	241.0	100.0	80.0	401.0	32.0	57.0	276.0	98.0	336.0	299.0
	110.0	M80 x 3	95.0	133.0	100.0													32.0					
	140.0	M100 x 3	112.0	163.0	128.0													32.0					

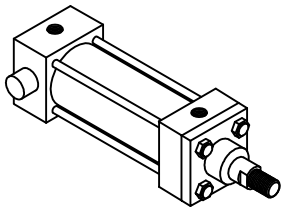

IHP 7 (MT2)

ISO 6020-2

FILE: 7.07_IHP07S2.dwg REV: 02/09/2010

27650 Groesbeck Hwy • Roseville, MI 48066-2759 • Phone 586.775.7211 • Fax 586.775.4545 • Toll Free 800.526.7968 • e-mail: sales@peninsularcylinders.com • www.peninsularcylinders.com

CAP TRUNNION

PENINSULAR® CYLINDER COMPANY

METRIC HIGH PRESSURE HYDRAULIC CYLINDER
LARGE BORE SERIES – ISO 6020–3
WORKING PRESSURE – 160 BAR (2320 PSI)
RATED PRESSURE – 250 BAR (3625 PSI)

NOTE:
FOR OTHER ROD END THREADS, REFER TO THE HOW TO ORDER SERIES IHP HIGH PRESSURE HYDRAULIC CYLINDERS (LARGE BORE SERIES) INFORMATION GUIDE. FOR SENSING OPTIONS CONTACT PENINSULAR.

*FOR PORT AND CUSHION POSITIONS, REFER TO THE HOW TO ORDER SERIES IHP HIGH PRESSURE HYDRAULIC CYLINDERS (LARGE BORE SERIES) INFORMATION GUIDE.

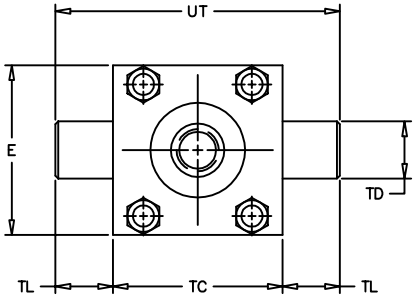

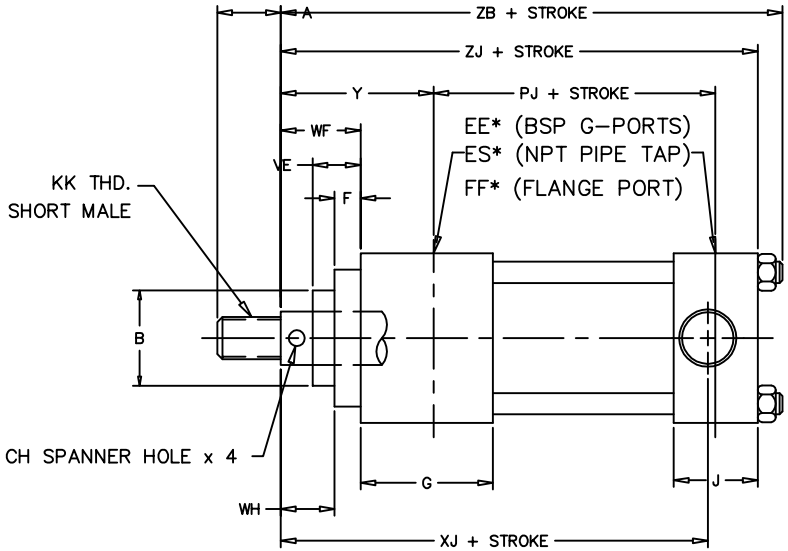

PENINSULAR "M" STYLE SHOWN

DIMENSIONS IN MILLIMETERS

BORE SIZE	ROD DIAMETER	KK THD. SHORT MALE	A	B f9	CH	E	G PORT EE	NPT (INCHES) ES	FLANGE PORT FF **	F	G	J	PJ	TC	TD f8	TL	UT	VE	WF	WH	XJ	Y	ZB	ZJ
250	140.0	M100 x 3	112.0	163.0	15.0	320.0	1 1/2"	2"	DN 51	25.0	134.0	94.0	216.0	320.0	125.0	100.0	520.0	83.0	110.0	85.0	393.0	157.0	491.0	460.0
	160.0	M110 x 3	112.0	185.0																				
	180.0	M125 x 4	125.0	205.0																				
320	180.0	M125 x 4	125.0	205.0	15.0	400.0	1 1/2"	2 1/2"	DN 64	35.0	170.0	114.0	251.0	400.0	160.0	125.0	650.0	83.0	110.0	75.0	450.0	167.0	569.0	535.0
	200.0	M140 x 4	140.0	225.0																				
	220.0	M160 x 4	160.0	245.0																				
360	180.0	M125 x 4	125.0	205.0	15.0	450.0	2"	2 1/2"	DN 64	42.0	190.0	124.0	296.0	450.0	180.0	145.0	740.0	83.0	110.0	68.0	500.0	172.0	629.0	595.0
	220.0	M160 x 4	160.0	245.0																				
	250.0	M180 x 4	180.0	275.0																				
400	220.0	M160 x 4	160.0	245.0	15.0	500.0	2"	2 1/2"	DN 64	50.0	205.0	150.0	320.0	500.0	200.0	160.0	820.0	83.0	110.0	60.0	525.0	185.0	667.0	628.0
	250.0	M180 x 4	180.0	275.0																				
	280.0	M200 x 4	200.0	305.0																				
500	280.0	M200 x 4	200.0	305.0	15.0	630.0	2"	2 1/2"	DN 64	70.0	254.0	200.0	400.0	630.0	250.0	200.0	1030.0	83.0	110.0	40.0	615.0	210.0	792.0	792.0
	320.0	M220 x 4	220.0	345.0																				
	360.0	M250 x 6	250.0	385.0																				

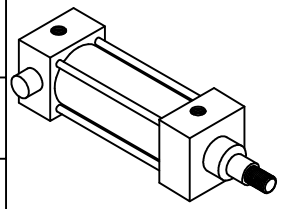

IHP 7 (MT2)

** PER ISO 6162

ISO 6020–3

FILE: 7.07_IHP07L2.dwg REV: 02/09/2010

27650 Groesbeck Hwy • Roseville, MI 48066–2759 • Phone 586.775.7211 • Fax 586.775.4545 • Toll Free 800.526.7968 • e-mail: sales@peninsularcylinders.com • www.peninsularcylinders.com

TIE ROD EXTEND HEAD END

PENINSULAR® CYLINDER COMPANY

METRIC HIGH PRESSURE HYDRAULIC CYLINDER
WORKING PRESSURE – 210 BAR (3000 PSI)

NOTE:
FOR OPTIONAL ROD THREADS CALL PENINSULAR.
FOR OPTIONAL PROXIMITY SWITCH CALL PENINSULAR.
U.S. PATENT NUMBERS: 4,726,282 AND D295,753.

*FOR PORT AND CUSHION POSITIONS REFER TO THE HOW TO ORDER PENINSULAR IHP SERIES HIGH PRESSURE METRIC HYDRAULIC CYLINDERS.

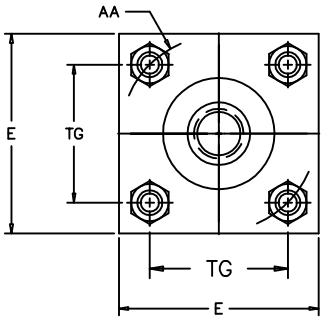

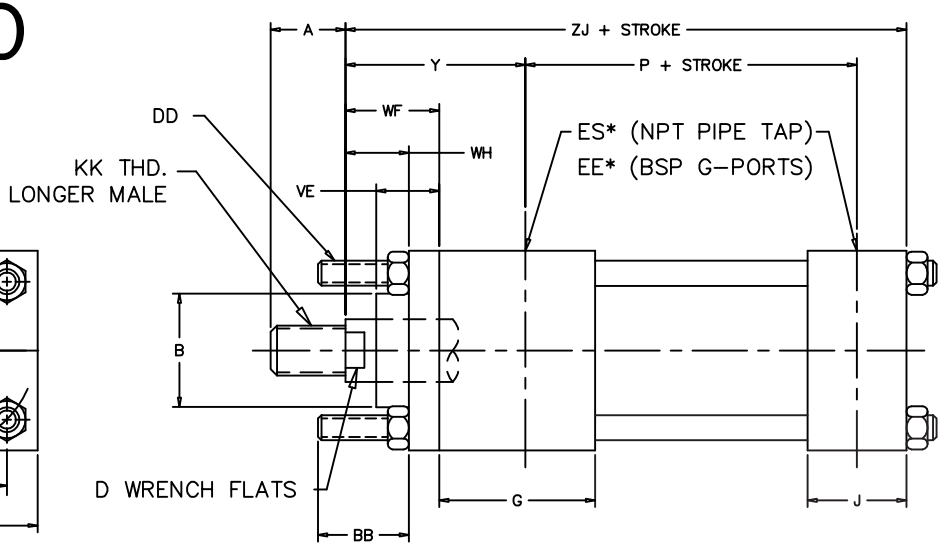

7.08

DIMENSIONS IN MILLIMETERS

BORE SIZE	ROD DIAMETER	PENINSULAR "L" STYLE SHOWN KK THD. LONGER MALE	A	AA	B	BB	D	DD	E	BSP G–PORT EE	NPT (INCHES) ES	G	J	P	TG	VE	WF	WH	Y	ZJ
40.0	18.0	M14 x 1.5	18.0	59.0	30.0	35.0	15.0	M8 x 1	63.0	3/8	1/2"	45.0	38.0	73.0	41.7	16.0	35.0	25.0	62.0	153.0
	28.0	M20 x 1.5	28.0		42.0		22.0									22.0				
50.0	22.0	M16 x 1.5	22.0	74.0	34.0	46.0	18.0	M12 x 1.25	75.0	1/2	1/2"	45.0	38.0	74.0	52.3	22.0	41.0	25.0	67.0	159.0
	28.0	M20 x 1.5	28.0		42.0		22.0									22.0				
	36.0	M27 x 2	36.0		50.0		30.0									25.0				
63.0	28.0	M20 x 1.5	28.0	91.0	42.0	46.0	22.0	M12 x 1.25	90.0	1/2	1/2"	45.0	38.0	80.0	64.3	22.0	48.0	32.0	71.0	168.0
	36.0	M27 x 2	36.0		50.0		30.0									25.0				
	45.0	M33 x 2	45.0		60.0		39.0									29.0				
80.0	36.0	M27 x 2	36.0	117.0	50.0	59.0	30.0	M16 x 1.5	115.0	3/4	3/4"	50.0	45.0	93.0	82.7	25.0	51.0	31.0	77.0	190.0
	45.0	M33 x 2	45.0		60.0		39.0									29.0				
	56.0	M42 x 2	56.0		72.0		48.0									29.0				
100.0	45.0	M33 x 2	45.0	137.0	60.0	59.0	39.0	M16 x 1.5	130.0	3/4	3/4"	50.0	45.0	101.0	96.9	29.0	57.0	35.0	82.0	203.0
	56.0	M42 x 2	56.0		72.0		48.0									29.0				
	70.0	M48 x 2	63.0		88.0		62.0									32.0				
125.0	56.0	M42 x 2	56.0	178.0	72.0	81.0	48.0	M22 x 1.5	165.0	1	3/4"	58.0	58.0	117.0	125.9	29.0	57.0	35.0	86.0	232.0
	70.0	M48 x 2	63.0		88.0		62.0									32.0				
	90.0	M64 x 3	85.0		108.0		80.0									32.0				
160.0	70.0	M48 x 2	63.0	219.0	88.0	92.0	62.0	M27 x 2	205.0	1	1"	58.0	58.0	130.0	154.9	32.0	57.0	32.0	86.0	245.0
	90.0	M64 x 3	85.0		108.0		80.0									32.0				
	110.0	M80 x 3	95.0		133.0		100.0									32.0				
200.0	90.0	M64 x 3	85.0	269.0	108.0	115.0	80.0	M30 x 2	245.0	1 1/4	1 1/2"	76.0	76.0	165.0	190.2	32.0	57.0	32.0	98.0	299.0
	110.0	M80 x 3	95.0		133.0		100.0									32.0				
	140.0	M100 x 3	112.0		163.0		128.0									32.0				

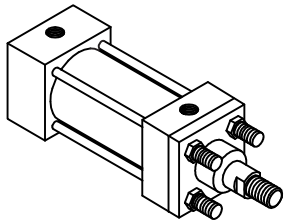

IHP 8 (MX3)

ISO 6020–2

FILE: 7.08_IHP08S2.dwg REV: 02/09/2010

27650 Groesbeck Hwy • Roseville, MI 48066–2759 • Phone 586.775.7211 • Fax 586.775.4545 • Toll Free 800.526.7968 • e-mail: sales@peninsularcylinders.com • www.peninsularcylinders.com

TIE ROD EXTEND CAP END

PENINSULAR® CYLINDER COMPANY

METRIC HIGH PRESSURE HYDRAULIC CYLINDER
WORKING PRESSURE – 210 BAR (3000 PSI)

NOTE:
FOR OPTIONAL ROD THREADS CALL PENINSULAR.
FOR OPTIONAL PROXIMITY SWITCH CALL PENINSULAR.
U.S. PATENT NUMBERS: 4,726,282 AND D295,753.

*FOR PORT AND CUSHION POSITIONS REFER TO THE HOW TO ORDER PENINSULAR IHP SERIES HIGH PRESSURE METRIC HYDRAULIC CYLINDERS.

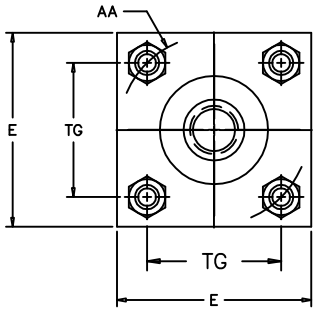

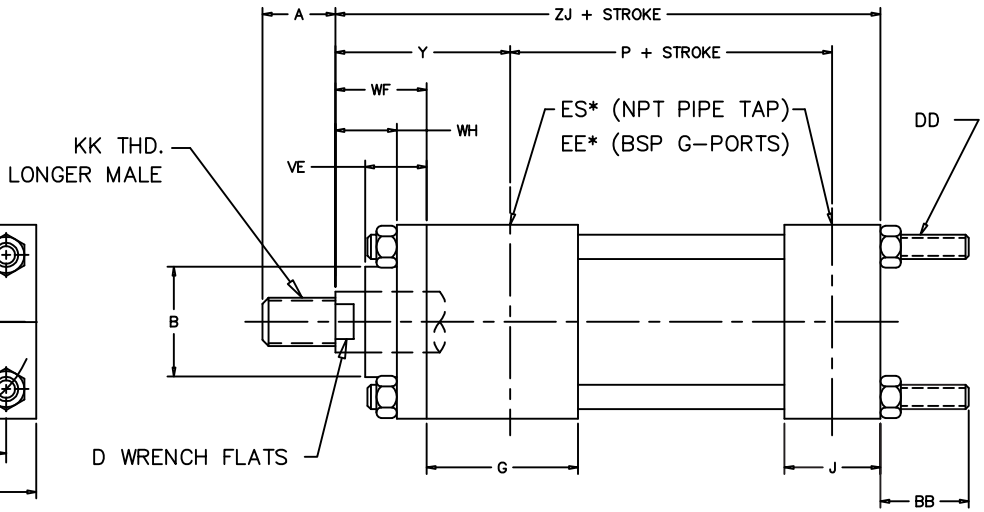

PENINSULAR "L" STYLE SHOWN

DIMENSIONS IN MILLIMETERS

BORE SIZE	ROD DIAMETER	KK THD. LONGER MALE	A	AA	B	BB	D	DD	E	BSP G–PORT EE	NPT (INCHES) ES	G	J	P	TG	VE	WF	WH	Y	ZJ
40.0	18.0	M14 x 1.5	18.0	59.0	30.0	35.0	15.0	M8 x 1	63.0	3/8	1/2"	45.0	38.0	73.0	41.7	16.0	35.0	25.0	62.0	153.0
	28.0	M20 x 1.5	28.0		42.0		22.0									22.0				
50.0	22.0	M16 x 1.5	22.0	74.0	34.0	46.0	18.0	M12 x 1.25	75.0	1/2	1/2"	45.0	38.0	74.0	52.3	22.0	41.0	25.0	67.0	159.0
	28.0	M20 x 1.5	28.0		42.0		22.0									22.0				
	36.0	M27 x 2	36.0		50.0		30.0									25.0				
63.0	28.0	M20 x 1.5	28.0	91.0	42.0	46.0	22.0	M12 x 1.25	90.0	1/2	1/2"	45.0	38.0	80.0	64.3	22.0	48.0	32.0	71.0	168.0
	36.0	M27 x 2	36.0		50.0		30.0									25.0				
	45.0	M33 x 2	45.0		60.0		39.0									29.0				
80.0	36.0	M27 x 2	36.0	117.0	50.0	59.0	30.0	M16 x 1.5	115.0	3/4	3/4"	50.0	45.0	93.0	82.7	25.0	51.0	31.0	77.0	190.0
	45.0	M33 x 2	45.0		60.0		39.0									29.0				
	56.0	M42 x 2	56.0		72.0		48.0									29.0				
100.0	45.0	M33 x 2	45.0	137.0	60.0	59.0	39.0	M16 x 1.5	130.0	3/4	3/4"	50.0	45.0	101.0	96.9	29.0	57.0	35.0	82.0	203.0
	56.0	M42 x 2	56.0		72.0		48.0									29.0				
	70.0	M48 x 2	63.0		88.0		62.0									32.0				
125.0	56.0	M42 x 2	56.0	178.0	72.0	81.0	48.0	M22 x 1.5	165.0	1	3/4"	58.0	58.0	117.0	125.9	29.0	57.0	35.0	86.0	232.0
	70.0	M48 x 2	63.0		88.0		62.0									32.0				
	90.0	M64 x 3	85.0		108.0		80.0									32.0				
160.0	70.0	M48 x 2	63.0	219.0	88.0	92.0	62.0	M27 x 2	205.0	1	1"	58.0	58.0	130.0	154.9	32.0	57.0	32.0	86.0	245.0
	90.0	M64 x 3	85.0		108.0		80.0									32.0				
	110.0	M80 x 3	95.0		133.0		100.0									32.0				
200.0	90.0	M64 x 3	85.0	269.0	108.0	115.0	80.0	M30 x 2	245.0	1 1/4	1 1/2"	76.0	76.0	165.0	190.2	32.0	57.0	32.0	98.0	299.0
	110.0	M80 x 3	95.0		133.0		100.0									32.0				
	140.0	M100 x 3	112.0		163.0		128.0									32.0				

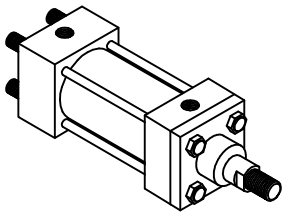

IHP 11 (MX2)

ISO 6020–2

FILE: 7.11_IHP11S2.dwg REV: 02/09/2010

27650 Groesbeck Hwy • Roseville, MI 48066–2759 • Phone 586.775.7211 • Fax 586.775.4545 • Toll Free 800.526.7968 • e–mail: sales@peninsularcylinders.com • www.peninsularcylinders.com

TIE ROD EXTEND BOTH ENDS

PENINSULAR® CYLINDER COMPANY

METRIC HIGH PRESSURE HYDRAULIC CYLINDER
WORKING PRESSURE – 210 BAR (3000 PSI)

NOTE:
FOR OPTIONAL ROD THREADS CALL PENINSULAR.
FOR OPTIONAL PROXIMITY SWITCH CALL PENINSULAR.
U.S. PATENT NUMBERS: 4,726,282 AND D295,753.

*FOR PORT AND CUSHION POSITIONS REFER TO THE HOW TO ORDER PENINSULAR IHP SERIES HIGH PRESSURE METRIC HYDRAULIC CYLINDERS.

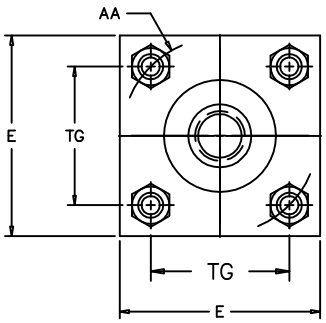

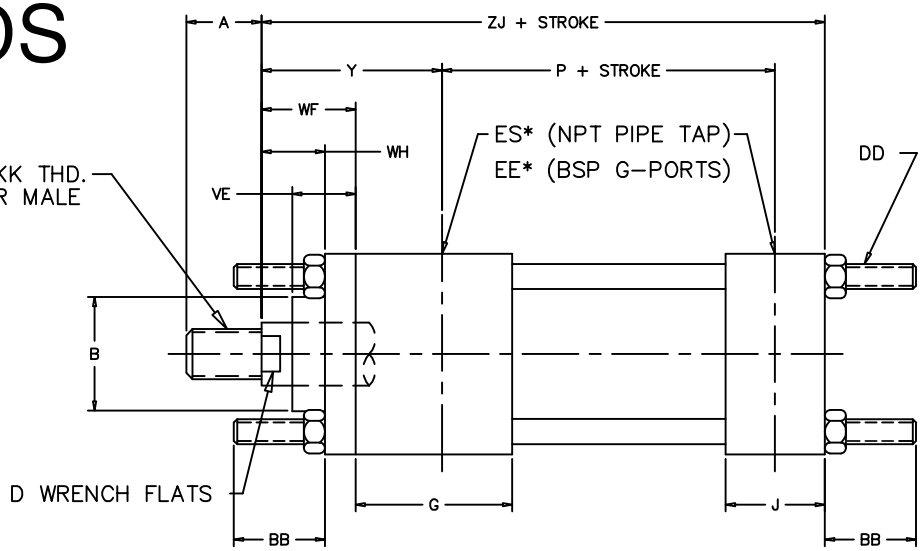

BORE SIZE	ROD DIAMETER	PENINSULAR "L" STYLE SHOWN KK THD. LONGER MALE	A	AA	B	BB	D	DD	E	BSP G-PORT EE	NPT (INCHES) ES	G	J	P	TG	VE	WF	WH	Y	ZJ
												DIMENSIONS IN MILLIMETERS								
40.0	18.0	M14 x 1.5	18.0	59.0	30.0	35.0	15.0	M8 x 1	63.0	3/8	1/2"	45.0	38.0	73.0	41.7	16.0	35.0	25.0	62.0	153.0
	28.0	M20 x 1.5	28.0		42.0		22.0									22.0				
50.0	22.0	M16 x 1.5	22.0	74.0	34.0	46.0	18.0	M12 x 1.25	75.0	1/2	1/2"	45.0	38.0	74.0	52.3	22.0	41.0	25.0	67.0	159.0
	28.0	M20 x 1.5	28.0		42.0		22.0									22.0				
	36.0	M27 x 2	36.0		50.0		30.0									25.0				
63.0	28.0	M20 x 1.5	28.0	91.0	42.0	46.0	22.0	M12 x 1.25	90.0	1/2	1/2"	45.0	38.0	80.0	64.3	22.0	48.0	32.0	71.0	168.0
	36.0	M27 x 2	36.0		50.0		30.0									25.0				
	45.0	M33 x 2	45.0		60.0		39.0									29.0				
80.0	36.0	M27 x 2	36.0	117.0	50.0	59.0	30.0	M16 x 1.5	115.0	3/4	3/4"	50.0	45.0	93.0	82.7	25.0	51.0	31.0	77.0	190.0
	45.0	M33 x 2	45.0		60.0		39.0									29.0				
	56.0	M42 x 2	56.0		72.0		48.0									29.0				
100.0	45.0	M33 x 2	45.0	137.0	60.0	59.0	39.0	M16 x 1.5	130.0	3/4	3/4"	50.0	45.0	101.0	96.9	29.0	57.0	35.0	82.0	203.0
	56.0	M42 x 2	56.0		72.0		48.0									29.0				
	70.0	M48 x 2	63.0		88.0		62.0									32.0				
125.0	56.0	M42 x 2	56.0	178.0	72.0	81.0	48.0	M22 x 1.5	165.0	1	3/4"	58.0	58.0	117.0	125.9	29.0	57.0	35.0	86.0	232.0
	70.0	M48 x 2	63.0		88.0		62.0									32.0				
	90.0	M64 x 3	85.0		108.0		80.0									32.0				
160.0	70.0	M48 x 2	63.0	219.0	88.0	92.0	62.0	M27 x 2	205.0	1	1"	58.0	58.0	130.0	154.9	32.0	57.0	32.0	86.0	245.0
	90.0	M64 x 3	85.0		108.0		80.0									32.0				
	110.0	M80 x 3	95.0		133.0		100.0									32.0				
200.0	90.0	M64 x 3	85.0	269.0	108.0	115.0	80.0	M30 x 2	245.0	1 1/4	1 1/2"	76.0	76.0	165.0	190.2	32.0	57.0	32.0	98.0	299.0
	110.0	M80 x 3	95.0		133.0		100.0									32.0				
	140.0	M100 x 3	112.0		163.0		128.0									32.0				

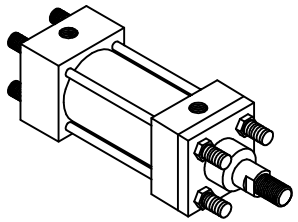

IHP 12 (MX1)

ISO 6020-2

FILE: 7.12_IHP12S2.dwg REV: 02/09/2010

27650 Groesbeck Hwy • Roseville, MI 48066-2759 • Phone 586.775.7211 • Fax 586.775.4545 • Toll Free 800.526.7968 • e-mail: sales@peninsularcylinders.com • www.peninsularcylinders.com

HEAD SQUARE BLOCK FLANGE

PENINSULAR® CYLINDER COMPANY

METRIC HIGH PRESSURE HYDRAULIC CYLINDER
LARGE BORE SERIES – ISO 6020–3
WORKING PRESSURE – 160 BAR (2320 PSI)
RATED PRESSURE – 250 BAR (3625 PSI)

NOTE:

FOR OTHER ROD END THREADS, REFER TO THE HOW TO ORDER SERIES IHP HIGH PRESSURE HYDRAULIC CYLINDERS (LARGE BORE SERIES) INFORMATION GUIDE. FOR SENSING OPTIONS CONTACT PENINSULAR.

*FOR PORT AND CUSHION POSITIONS, REFER TO THE HOW TO ORDER SERIES IHP HIGH PRESSURE HYDRAULIC CYLINDERS (LARGE BORE SERIES) INFORMATION GUIDE.

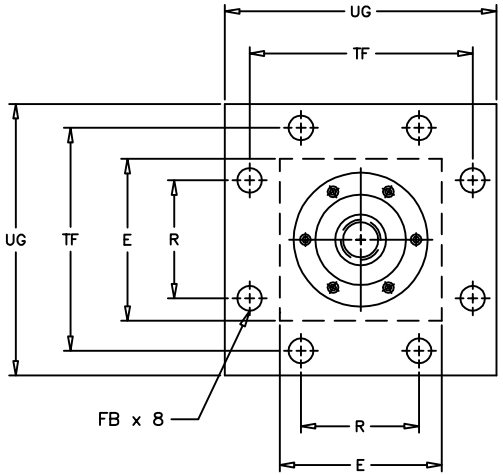

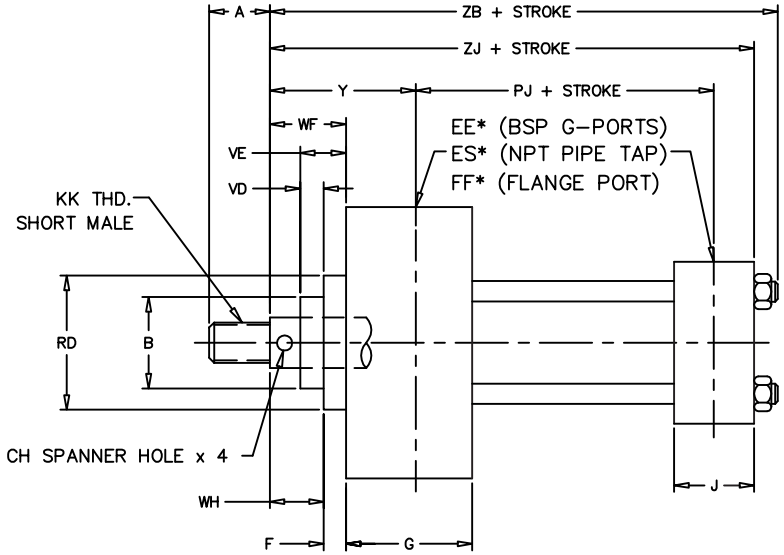

DIMENSIONS IN MILLIMETERS

BORE SIZE	ROD DIAMETER	PENINSULAR "M" STYLE SHOWN KK THD. SHORT MALE	A	B f9	CH	E	G PORT EE	NPT (INCHES) ES	FLANGE PORT FF **	F	FB	G	J	PJ	R	RD f8	TF	UG	VD	VE	WF	WH	Y	ZB	ZJ
250	140.0	M100 x 3	112.0	163.0	15.0	320.0	1 1/2"	2"	DN 51	25.0	30.0	94.0	94.0	216.0	235.0	280.0	380.0	445.0	58.0	83.0	110.0	85.0	157.0	505.0	420.0
	160.0	M110 x 3	112.0	185.0																					
	180.0	M125 x 4	125.0	205.0																					
320	180.0	M125 x 4	125.0	205.0	15.0	400.0	1 1/2"	2 1/2"	DN 64	35.0	36.0	114.0	114.0	251.0	283.0	325.0	472.0	549.0	48.0	83.0	110.0	75.0	167.0	580.0	475.0
	200.0	M140 x 4	140.0	225.0																					
	220.0	M160 x 4	160.0	245.0																					
360	180.0	M125 x 4	125.0	205.0	15.0	450.0	2"	2 1/2"	DN 64	42.0	39.0	124.0	124.0	296.0	305.0	350.0	528.0	611.0	41.0	83.0	110.0	68.0	172.0	640.0	530.0
	220.0	M160 x 4	160.0	245.0																					
	250.0	M180 x 4	180.0	275.0																					
400	220.0	M160 x 4	160.0	245.0	15.0	500.0	2"	2 1/2"	DN 64	50.0	45.0	150.0	150.0	320.0	340.0	380.0	588.0	683.0	33.0	83.0	110.0	60.0	185.0	685.0	580.0
	250.0	M180 x 4	180.0	275.0																					
	280.0	M200 x 4	200.0	305.0																					
500	280.0	M200 x 4	200.0	305.0	15.0	630.0	2"	2 1/2"	DN 64	70.0	56.0	200.0	200.0	400.0	425.0	490.0	740.0	858.0	13.0	83.0	110.0	40.0	210.0	825.0	710.0
	320.0	M220 x 4	220.0	345.0																					
	360.0	M250 x 6	250.0	385.0																					

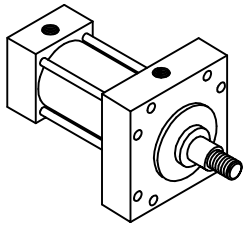

IHP 17 (MF5)

** PER ISO 6162

ISO 6020–3

FILE: 7.17_IHP17L2.dwg REV: 02/09/2010

27650 Groesbeck Hwy • Roseville, MI 48066–2759 • Phone 586.775.7211 • Fax 586.775.4545 • Toll Free 800.526.7968 • e-mail: sales@peninsularcylinders.com • www.peninsularcylinders.com

CAP SQUARE BLOCK FLANGE

PENINSULAR® CYLINDER COMPANY

METRIC HIGH PRESSURE HYDRAULIC CYLINDER
LARGE BORE SERIES – ISO 6020–3
WORKING PRESSURE – 160 BAR (2320 PSI)
RATED PRESSURE – 250 BAR (3625 PSI)

NOTE:
FOR OTHER ROD END THREADS, REFER TO THE HOW TO ORDER SERIES IHP HIGH PRESSURE HYDRAULIC CYLINDERS (LARGE BORE SERIES) INFORMATION GUIDE. FOR SENSING OPTIONS CONTACT PENINSULAR.

*FOR PORT AND CUSHION POSITIONS, REFER TO THE HOW TO ORDER SERIES IHP HIGH PRESSURE HYDRAULIC CYLINDERS (LARGE BORE SERIES) INFORMATION GUIDE.

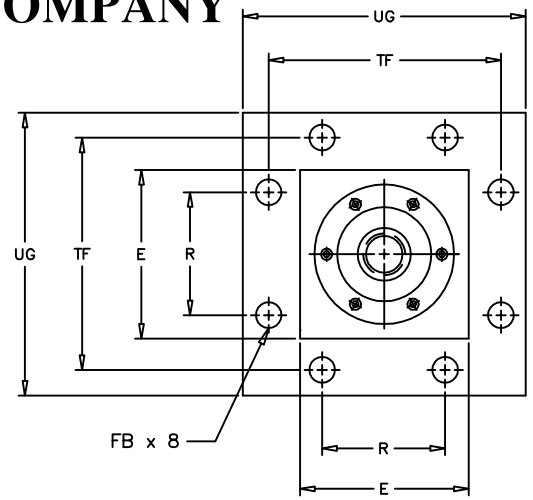

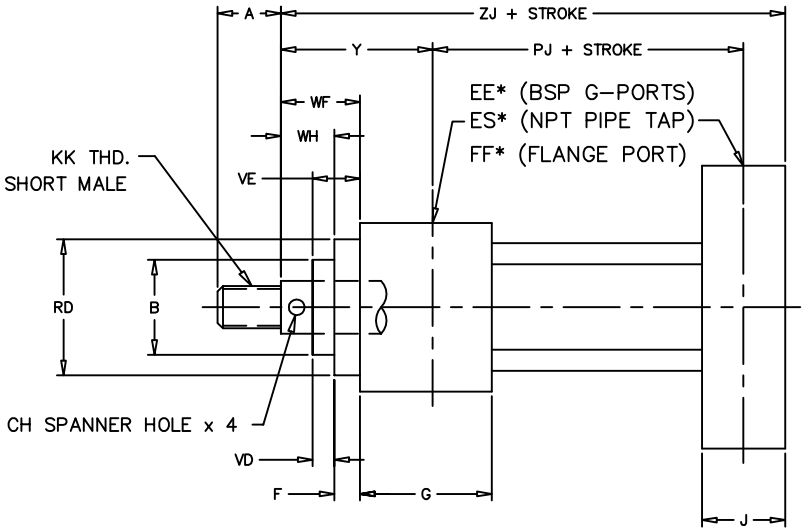

7.18

DIMENSIONS IN MILLIMETERS

BORE SIZE	ROD DIAMETER	PENINSULAR "M" STYLE SHOWN KK THD. SHORT MALE	A	B f9	CH	E	G PORT EE	NPT (INCHES) ES	FLANGE PORT FF **	F	FB	G	J	PJ	R	RD f8	TF	UG	VD	VE	WF	WH	Y	ZJ
250	140.0	M100 x 3	112.0	163.0	15.0	320.0	1 1/2"	2"	DN 51	25.0	30.0	94.0	94.0	216.0	235.0	280.0	380.0	445.0	58.0	83.0	110.0	85.0	157.0	420.0
	160.0	M110 x 3	112.0	185.0																				
	180.0	M125 x 4	125.0	205.0																				
320	180.0	M125 x 4	125.0	205.0	15.0	400.0	1 1/2"	2 1/2"	DN 64	35.0	36.0	114.0	114.0	251.0	283.0	325.0	472.0	549.0	48.0	83.0	110.0	75.0	167.0	475.0
	200.0	M140 x 4	140.0	225.0																				
	220.0	M160 x 4	160.0	245.0																				
360	180.0	M125 x 4	125.0	205.0	15.0	450.0	2"	2 1/2"	DN 64	42.0	39.0	124.0	124.0	296.0	305.0	350.0	528.0	611.0	41.0	83.0	110.0	68.0	172.0	530.0
	220.0	M160 x 4	160.0	245.0																				
	250.0	M180 x 4	180.0	275.0																				
400	220.0	M160 x 4	160.0	245.0	15.0	500.0	2"	2 1/2"	DN 64	50.0	45.0	150.0	150.0	320.0	340.0	380.0	588.0	683.0	33.0	83.0	110.0	60.0	185.0	580.0
	250.0	M180 x 4	180.0	275.0																				
	280.0	M200 x 4	200.0	305.0																				
500	280.0	M200 x 4	200.0	305.0	15.0	630.0	2"	2 1/2"	DN 64	70.0	56.0	200.0	200.0	400.0	425.0	490.0	740.0	858.0	13.0	83.0	110.0	40.0	210.0	710.0
	360.0	M250 x 6	250.0	385.0																				

** PER ISO 6162

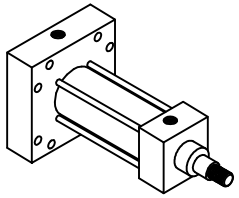

IHP 18 (MF6)

ISO 6020–3

27650 Groesbeck Hwy • Roseville, MI 48066-2759 • Phone 586.775.7211 • Fax 586.775.4545 • Toll Free 800.526.7968 • e-mail: sales@peninsularcylinders.com • www.peninsularcylinders.com

REAR SPHERICAL MOUNT

PENINSULAR® CYLINDER COMPANY

METRIC HIGH PRESSURE HYDRAULIC CYLINDER
LARGE BORE SERIES – ISO 6020–3
WORKING PRESSURE – 160 BAR (2320 PSI)
RATED PRESSURE – 250 BAR (3625 PSI)

NOTE:
FOR OTHER ROD END THREADS, REFER TO THE HOW TO ORDER SERIES IHP HIGH PRESSURE HYDRAULIC CYLINDERS (LARGE BORE SERIES) INFORMATION GUIDE. FOR SENSING OPTIONS CONTACT PENINSULAR.

*FOR PORT AND CUSHION POSITIONS, REFER TO THE HOW TO ORDER SERIES IHP HIGH PRESSURE HYDRAULIC CYLINDERS (LARGE BORE SERIES) INFORMATION GUIDE.

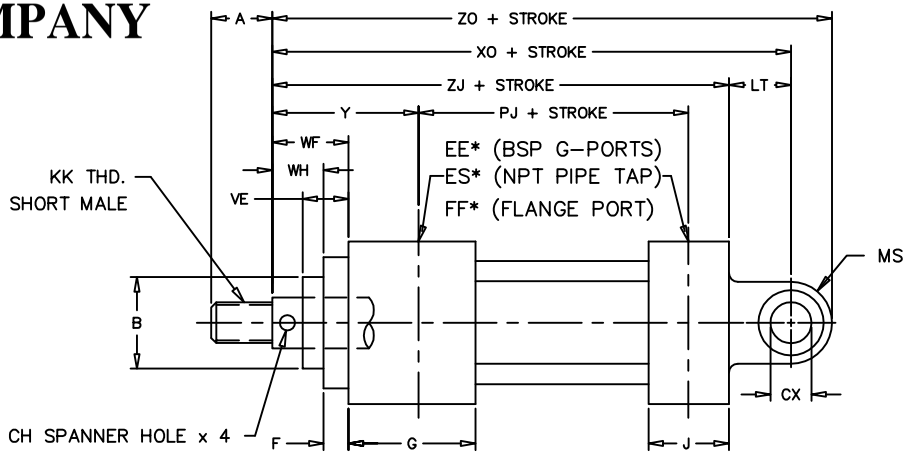

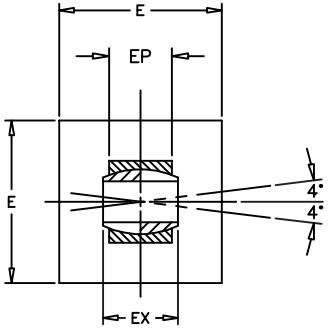

DIMENSIONS IN MILLIMETERS

BORE SIZE	ROD DIAMETER	PENINSULAR "M" STYLE SHOWN KK THD. SHORT MALE	A	B f9	CH	CX	E	EP	EX	G PORT EE	NPT (INCHES) ES	FLANGE PORT FF **	F	G	J	LT	MS	PJ	VE	WF	WH	XO	Y	ZO	ZJ
250	140.0	M100 x 3	112.0	163.0	15.0	125.0	320.0	102.0	125.0	1 1/2"	2"	DN 51	25.0	94.0	94.0	160.0	160.0	216.0	83.0	110.0	85.0	580.0	157.0	740.0	420.0
	160.0	M110 x 3	112.0	185.0																					
	180.0	M125 x 4	125.0	205.0																					
320	180.0	M125 x 4	125.0	205.0	15.0	160.0	400.0	130.0	160.0	1 1/2"	2 1/2"	DN 64	35.0	114.0	114.0	200.0	200.0	251.0	83.0	110.0	75.0	675.0	167.0	875.0	475.0
	200.0	M140 x 4	140.0	225.0																					
	220.0	M160 x 4	160.0	245.0																					
360	180.0	M125 x 4	125.0	205.0	15.0	160.0	450.0	130.0	160.0	2"	2 1/2"	DN 64	42.0	124.0	124.0	200.0	200.0	296.0	83.0	110.0	68.0	730.0	172.0	930.0	530.0
	220.0	M160 x 4	160.0	245.0																					
	250.0	M180 x 4	180.0	275.0																					
400	220.0	M160 x 4	160.0	245.0	15.0	200.0	500.0	162.0	200.0	2"	2 1/2"	DN 64	50.0	150.0	150.0	250.0	250.0	320.0	83.0	110.0	60.0	830.0	185.0	1080.0	580.0
	250.0	M180 x 4	180.0	275.0																					
	280.0	M200 x 4	200.0	305.0																					
500	280.0	M200 x 4	200.0	305.0	15.0	250.0	630.0	192.0	250.0	2"	2 1/2"	DN 64	70.0	200.0	200.0	320.0	320.0	400.0	83.0	110.0	40.0	1030.0	210.0	1350.0	710.0
	360.0	M250 x 6	250.0	385.0																					

** PER ISO 6162

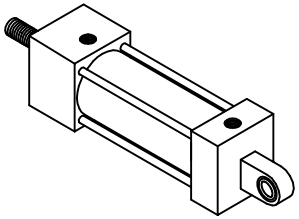

IHP 22 (MP5)

ISO 6020–3

FILE: 7.22_IHP22L2.dwg REV: 02/09/2010

27650 Groesbeck Hwy • Roseville, MI 48066–2759 • Phone 586.775.7211 • Fax 586.775.4545 • Toll Free 800.526.7968 • e–mail: sales@peninsularcylinders.com • www.peninsularcylinders.com

REAR SPHERICAL MOUNT

PENINSULAR® CYLINDER COMPANY

METRIC HIGH PRESSURE HYDRAULIC CYLINDER
WORKING PRESSURE – 210 BAR (3000 PSI)

NOTE:
FOR OPTIONAL ROD THREADS CALL PENINSULAR.
FOR OPTIONAL PROXIMITY SWITCH CALL PENINSULAR.
U.S. PATENT NUMBERS: 4,726,282 AND D295,753.

*FOR PORT AND CUSHION POSITIONS REFER TO THE HOW TO ORDER PENINSULAR IHP SERIES HIGH PRESSURE METRIC HYDRAULIC CYLINDERS.

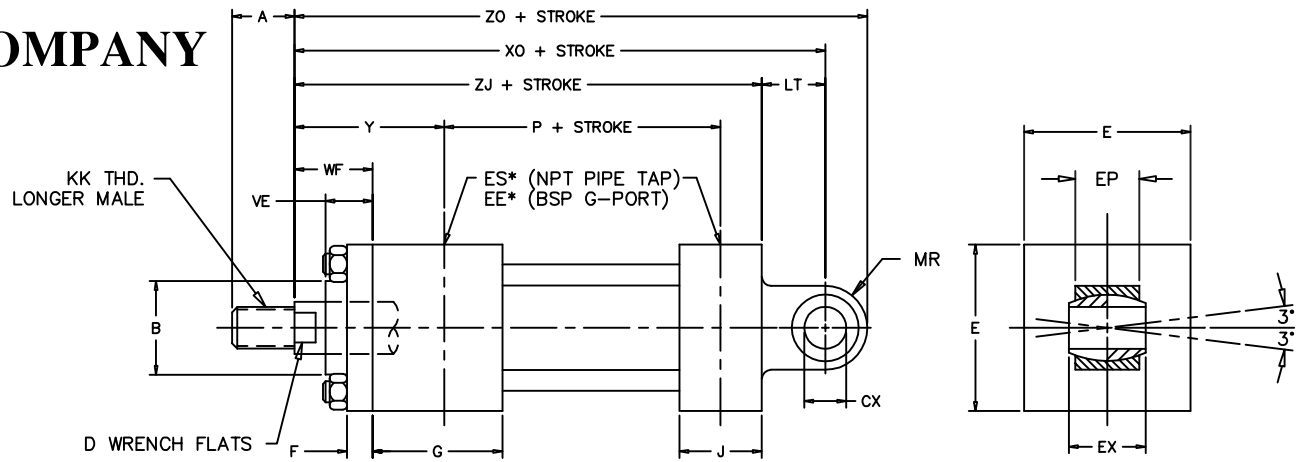

PENINSULAR "L" STYLE SHOWN

DIMENSIONS IN MILLIMETERS

BORE SIZE	ROD DIAMETER	KK THD. LONGER MALE	A	B	CX	D	E	BSP G-PORT EE	NPT (INCHES) ES	EP	EX	F	G	J	LT	MR	P	VE	WF	XO	Y	ZO	ZJ
40.0	18.0	M14 x 1.5	18.0	30.0	20.0	15.0	63.0	3/8	1/2	13.0	16.0	10.0	45.0	38.0	25.0	29.0	73.0	16.0	35.0	178.0	62.0	207.0	153.0
	28.0	M20 x 1.5	28.0	42.0		22.0												22.0					
50.0	22.0	M16 x 1.5	22.0	34.0	25.0	18.0	75.0	1/2	1/2"	17.0	20.0	16.0	45.0	38.0	31.0	33.0	74.0	22.0	41.0	190.0	67.0	223.0	159.0
	28.0	M20 x 1.5	28.0	42.0		22.0												22.0					
	36.0	M27 x 2	36.0	50.0		30.0												25.0					
63.0	28.0	M20 x 1.5	28.0	42.0	30.0	22.0	90.0	1/2	1/2	19.0	22.0	16.0	45.0	38.0	38.0	40.0	80.0	22.0	48.0	206.0	71.0	246.0	168.0
	36.0	M27 x 2	36.0	50.0		30.0												25.0					
	45.0	M33 x 2	45.0	60.0		39.0												29.0					
80.0	36.0	M27 x 2	36.0	50.0	40.0	30.0	115.0	3/4	3/4	23.0	28.0	20.0	50.0	45.0	48.0	50.0	93.0	25.0	51.0	238.0	77.0	288.0	190.0
	45.0	M33 x 2	45.0	60.0		39.0												29.0					
	56.0	M42 x 2	56.0	72.0		48.0												29.0					
100.0	45.0	M33 x 2	45.0	60.0	50.0	39.0	130.0	3/4	3/4"	30.0	35.0	22.0	50.0	45.0	58.0	62.0	101.0	29.0	57.0	261.0	82.0	323.0	203.0
	56.0	M42 x 2	56.0	72.0		48.0												29.0					
	70.0	M48 x 2	63.0	88.0		62.0												32.0					
125.0	56.0	M42 x 2	56.0	72.0	60.0	48.0	165.0	1	3/4"	38.0	44.0	22.0	58.0	58.0	72.0	80.0	117.0	29.0	57.0	304.0	86.0	384.0	232.0
	70.0	M48 x 2	63.0	88.0		62.0												32.0					
	90.0	M64 x 3	85.0	108.0		80.0												32.0					
160.0	70.0	M48 x 2	63.0	88.0	80.0	62.0	205.0	1	1"	47.0	55.0	25.0	58.0	58.0	92.0	100.0	130.0	32.0	57.0	337.0	86.0	437.0	245.0
	90.0	M64 x 3	85.0	108.0		80.0												32.0					
	110.0	M80 x 3	95.0	133.0		100.0												32.0					
200.0	90.0	M64 x 3	85.0	108.0	100.0	80.0	245.0	1 1/4	1 1/2"	57.0	70.0	25.0	76.0	76.0	116.0	120.0	165.0	32.0	57.0	415.0	98.0	535.0	299.0
	110.0	M80 x 3	95.0	133.0		100.0												32.0					
	140.0	M100 x 3	112.0	163.0		128.0												32.0					

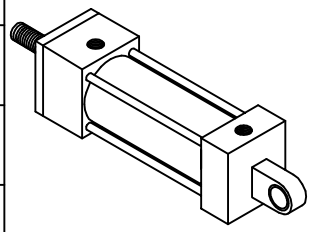

IHP 22 (MP5)

ISO 6020-2

7.22

27650 Groesbeck Hwy • Roseville, MI 48066-2759 • Phone 586.775.7211 • Fax 586.775.4545 • Toll Free 800.526.7968 • e-mail: sales@peninsularcylinders.com • www.peninsularcylinders.com

FIXED REAR EYE MOUNT

PENINSULAR® CYLINDER COMPANY

METRIC HIGH PRESSURE HYDRAULIC CYLINDER
WORKING PRESSURE – 210 BAR (3000 PSI)

NOTE:
FOR OPTIONAL ROD THREADS CALL PENINSULAR.
FOR OPTIONAL PROXIMITY SWITCH CALL PENINSULAR.
U.S. PATENT NUMBERS: 4,726,282 AND D295,753.

*FOR PORT AND CUSHION POSITIONS REFER TO THE HOW TO ORDER PENINSULAR IHP SERIES HIGH PRESSURE METRIC HYDRAULIC CYLINDERS.

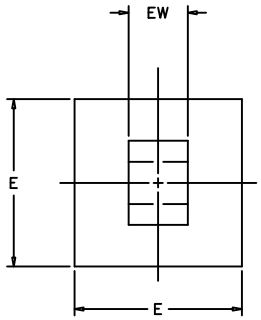

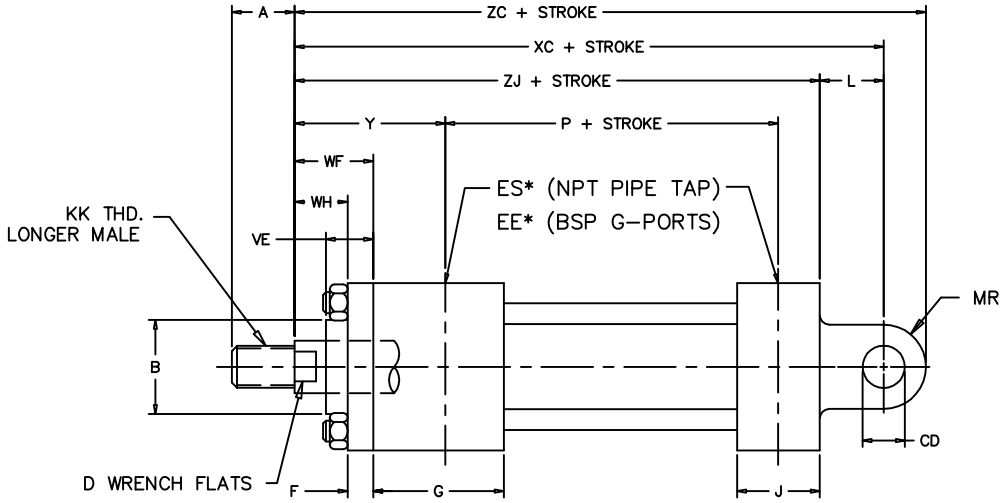

DIMENSIONS IN MILLIMETERS

BORE SIZE	ROD DIAMETER	PENINSULAR "L" SYLE SHOWN KK THD. LONGER MALE	A	B	CD	D	E	BSP G–PORT EE	NPT (INCHES) ES	EW	F	G	J	L	MR	P	VE	WF	WH	XC	Y	ZC	ZJ
40.0	18.0	M14 x 1.5	18.0	30.0	14.0	15.0	63.0	3/8	1/2"	20.0	10.0	45.0	38.0	19.0	14.0	73.0	16.0	35.0	25.0	172.0	62.0	186.0	153.0
	28.0	M20 x 1.5	28.0	42.0		22.0											22.0						
50.0	22.0	M16 x 1.5	22.0	34.0	20.0	18.0	75.0	1/2	1/2"	30.0	16.0	45.0	38.0	32.0	20.0	74.0	22.0	41.0	25.0	191.0	67.0	211.0	159.0
	28.0	M20 x 1.5	28.0	42.0		22.0											22.0						
	36.0	M27 x 2	36.0	50.0		30.0											25.0						
63.0	28.0	M20 x 1.5	28.0	42.0	20.0	22.0	90.0	1/2	1/2"	30.0	16.0	45.0	38.0	32.0	20.0	80.0	22.0	48.0	32.0	200.0	71.0	220.0	168.0
	36.0	M27 x 2	36.0	50.0		30.0											25.0						
	45.0	M33 x 2	45.0	60.0		39.0											29.0						
80.0	36.0	M27 x 2	36.0	50.0	28.0	30.0	115.0	3/4	3/4"	40.0	20.0	50.0	45.0	39.0	28.0	93.0	25.0	51.0	31.0	229.0	77.0	257.0	190.0
	45.0	M33 x 2	45.0	60.0		39.0											29.0						
	56.0	M42 x 2	56.0	72.0		48.0											29.0						
100.0	45.0	M33 x 2	45.0	60.0	36.0	39.0	130.0	3/4	3/4"	50.0	22.0	50.0	45.0	54.0	36.0	101.0	29.0	57.0	35.0	257.0	82.0	293.0	203.0
	56.0	M42 x 2	56.0	72.0		48.0											29.0						
	70.0	M48 x 2	63.0	88.0		62.0											32.0						
125.0	56.0	M42 x 2	56.0	72.0	45.0	48.0	165.0	1	3/4"	60.0	22.0	58.0	58.0	57.0	45.0	117.0	29.0	57.0	35.0	289.0	86.0	334.0	232.0
	70.0	M48 x 2	63.0	88.0		62.0											32.0						
	90.0	M64 x 3	85.0	108.0		80.0											32.0						
160.0	70.0	M48 x 2	63.0	88.0	56.0	62.0	205.0	1	1"	70.0	25.0	58.0	58.0	63.0	56.0	130.0	32.0	57.0	32.0	308.0	86.0	364.0	245.0
	90.0	M64 x 3	85.0	108.0		80.0											32.0						
	110.0	M80 x 3	95.0	133.0		100.0											32.0						
200.0	90.0	M64 x 3	85.0	108.0	70.0	80.0	245.0	1 1/4	1 1/2"	80.0	25.0	76.0	76.0	82.0	70.0	165.0	32.0	57.0	32.0	381.0	98.0	451.0	299.0
	110.0	M80 x 3	95.0	133.0		100.0											32.0						
	140.0	M100 x 3	112.0	163.0		128.0											32.0						

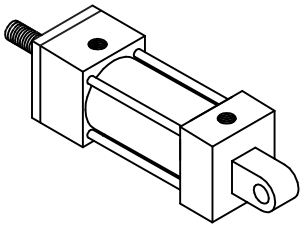

IHP 25 (MP3)

ISO 6020–2

FILE: 7.25_IHP25S2.dwg REV: 02/09/2010

27650 Groesbeck Hwy • Roseville, MI 48066–2759 • Phone 586.775.7211 • Fax 586.775.4545 • Toll Free 800.526.7968 • e-mail: sales@peninsularcylinders.com • www.peninsularcylinders.com

FIXED REAR EYE MOUNT

PENINSULAR® CYLINDER COMPANY

METRIC HIGH PRESSURE HYDRAULIC CYLINDER
LARGE BORE SERIES – ISO 6020–3
WORKING PRESSURE – 160 BAR (2320 PSI)
RATED PRESSURE – 250 BAR (3625 PSI)

NOTE:

FOR OTHER ROD END THREADS, REFER TO THE HOW TO ORDER SERIES IHP HIGH PRESSURE HYDRAULIC CYLINDERS (LARGE BORE SERIES) INFORMATION GUIDE. FOR SENSING OPTIONS CONTACT PENINSULAR.

*FOR PORT AND CUSHION POSITIONS, REFER TO THE HOW TO ORDER SERIES IHP HIGH PRESSURE HYDRAULIC CYLINDERS (LARGE BORE SERIES) INFORMATION GUIDE.

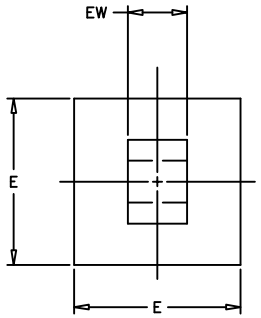

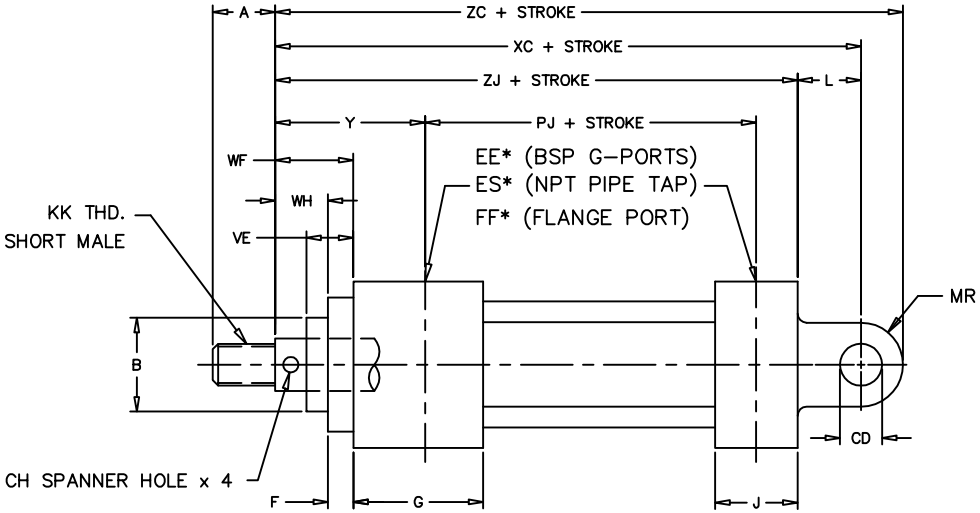

DIMENSIONS IN MILLIMETERS

BORE SIZE	ROD DIAMETER	PENINSULAR "M" STYLE SHOWN KK THD. SHORT MALE	A	B f9	CD	CH	E	EW	G PORT EE	NPT (INCHES) ES	FLANGE PORT FF **	F	G	J	L	MR	PJ	VE	WF	WH	XC	Y	ZC	ZJ
250	140.0	M100 x 3	112.0	163.0	90.0	15.0	320.0	90.0	1 1/2"	2"	DN 51	25.0	94.0	94.0	125.0	100.0	216.0	83.0	110.0	85.0	545.0	157.0	645.0	420.0
	160.0	M110 x 3	112.0	185.0																				
	180.0	M125 x 4	125.0	205.0																				
320	180.0	M125 x 4	125.0	205.0	110.0	15.0	400.0	110.0	1 1/2"	2 1/2"	DN 64	35.0	114.0	114.0	152.0	120.0	251.0	83.0	110.0	75.0	627.0	167.0	747.0	475.0
	200.0	M140 x 4	140.0	225.0																				
	220.0	M160 x 4	160.0	245.0																				
360	180.0	M125 x 4	125.0	205.0	125.0	15.0	450.0	125.0	2"	2 1/2"	DN 64	42.0	124.0	124.0	175.0	140.0	296.0	83.0	110.0	68.0	705.0	172.0	845.0	530.0
	220.0	M160 x 4	160.0	245.0																				
	250.0	M180 x 4	180.0	275.0																				
400	220.0	M160 x 4	160.0	245.0	140.0	15.0	500.0	140.0	2"	2 1/2"	DN 64	50.0	150.0	150.0	195.0	160.0	320.0	83.0	110.0	60.0	775.0	185.0	935.0	580.0
	250.0	M180 x 4	180.0	275.0																				
	280.0	M200 x 4	200.0	305.0																				
500	280.0	M200 x 4	200.0	305.0	180.0	15.0	630.0	180.0	2"	2 1/2"	DN 64	70.0	200.0	200.0	250.0	200.0	400.0	83.0	110.0	40.0	960.0	210.0	1160.0	710.0
	320.0	M220 x 4	220.0	345.0																				
	360.0	M250 x 6	250.0	385.0																				

** PER ISO 6162

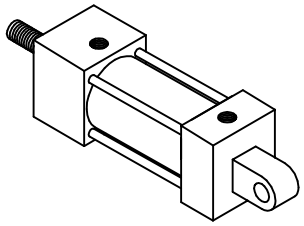

IHP 25 (MP3)

ISO 6020–3

FILE: 7.25_IHP25L2.dwg REV: 02/09/2010

27650 Groesbeck Hwy • Roseville, MI 48066–2759 • Phone 586.775.7211 • Fax 586.775.4545 • Toll Free 800.526.7968 • e-mail: sales@peninsularcylinders.com • www.peninsularcylinders.com

CAP RECTANGULAR BLOCK FLANGE

PENINSULAR® CYLINDER COMPANY

METRIC HIGH PRESSURE HYDRAULIC CYLINDER
WORKING PRESSURE – 210 BAR (3000 PSI)

NOTE:
FOR OPTIONAL ROD THREADS CALL PENINSULAR.
FOR OPTIONAL PROXIMITY SWITCH CALL PENINSULAR.
U.S. PATENT NUMBERS: 4,726,282 AND D295,753.

*FOR PORT AND CUSHION POSITIONS REFER TO THE HOW TO ORDER PENINSULAR IHP SERIES HIGH PRESSURE METRIC HYDRAULIC CYLINDERS.

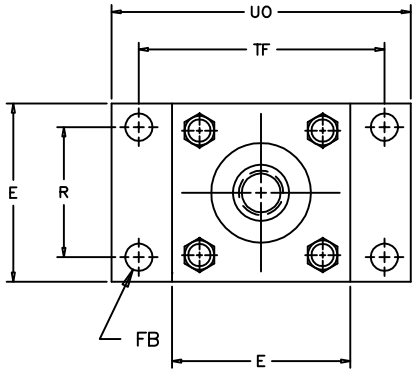

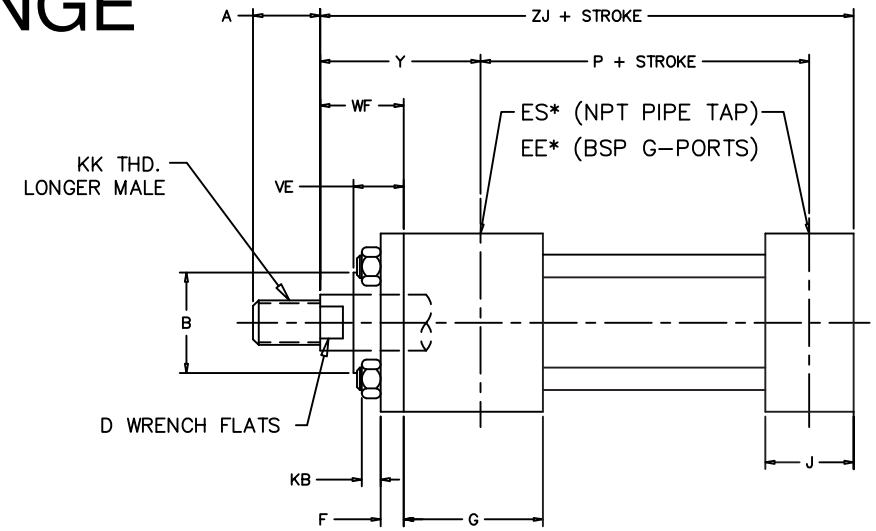

DIMENSIONS IN MILLIMETERS

BORE SIZE	ROD DIAMETER	PENINSULAR "L" STYLE SHOWN KK THD. LONGER MALE	A	B	D	E	BSP G–PORT EE	NPT (INCHES) ES	F	FB	G	J	KB	P	R	TF	UO	VE	WF	Y	ZJ
40.0	18.0	M14 x 1.5	18.0	30.0	15.0	63.0	3/8	1/2"	10.0	11.0	45.0	38.0	6.5	73.0	41.0	87.0	110.0	16.0	35.0	62.0	153.0
	28.0	M20 x 1.5	28.0	42.0	22.0													22.0			
50.0	22.0	M16 x 1.5	22.0	34.0	18.0	75.0	1/2	1/2"	16.0	14.0	45.0	38.0	10.0	74.0	52.0	105.0	130.0	22.0	41.0	67.0	159.0
	28.0	M20 x 1.5	28.0	42.0	22.0													22.0			
	36.0	M27 x 2	36.0	50.0	30.0													25.0			
63.0	28.0	M20 x 1.5	28.0	42.0	22.0	90.0	1/2	1/2"	16.0	14.0	45.0	38.0	10.0	80.0	65.0	117.0	145.0	22.0	48.0	71.0	168.0
	36.0	M27 x 2	36.0	50.0	30.0													25.0			
	45.0	M33 x 2	45.0	60.0	39.0													29.0			
80.0	36.0	M27 x 2	36.0	50.0	30.0	115.0	3/4	3/4"	20.0	18.0	50.0	45.0	13.0	93.0	83.0	149.0	180.0	25.0	51.0	77.0	190.0
	45.0	M33 x 2	45.0	60.0	39.0													29.0			
	56.0	M42 x 2	56.0	72.0	48.0													29.0			
100.0	45.0	M33 x 2	45.0	60.0	39.0	130.0	3/4	3/4"	22.0	18.0	50.0	45.0	13.0	101.0	97.0	162.0	200.0	29.0	57.0	82.0	203.0
	56.0	M42 x 2	56.0	72.0	48.0													29.0			
	70.0	M48 x 2	63.0	88.0	62.0													32.0			
125.0	56.0	M42 x 2	56.0	72.0	48.0	165.0	1	3/4"	22.0	22.0	58.0	58.0	18.0	117.0	126.0	208.0	250.0	29.0	57.0	86.0	232.0
	70.0	M48 x 2	63.0	88.0	62.0													32.0			
	90.0	M64 x 3	85.0	108.0	80.0													32.0			
160.0	70.0	M48 x 2	63.0	88.0	62.0	205.0	1	1"	25.0	26.0	58.0	58.0	22.0	130.0	155.0	253.0	300.0	32.0	57.0	86.0	245.0
	90.0	M64 x 3	85.0	108.0	80.0													32.0			
	110.0	M80 x 3	95.0	133.0	100.0													32.0			
200.0	90.0	M64 x 3	85.0	108.0	80.0	245.0	1 1/4	1 1/2"	25.0	33.0	76.0	76.0	24.0	165.0	190.0	300.0	360.0	32.0	57.0	98.0	299.0
	110.0	M80 x 3	95.0	133.0	100.0													32.0			
	140.0	M100 x 3	112.0	163.0	128.0													32.0			

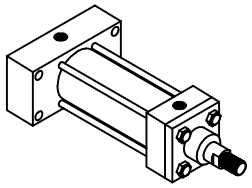

IHP 29 (ME6)

ISO 6020–2

FILE: 7.29_IHP29S2.dwg REV: 02/09/2010

27650 Groesbeck Hwy • Roseville, MI 48066–2759 • Phone 586.775.7211 • Fax 586.775.4545 • Toll Free 800.526.7968 • e-mail: sales@peninsularcylinders.com • www.peninsularcylinders.com

HEAD RECTANGULAR BLOCK FLANGE

PENINSULAR® CYLINDER COMPANY

METRIC HIGH PRESSURE HYDRAULIC CYLINDER
WORKING PRESSURE – 210 BAR (3000 PSI)

NOTE:
FOR OPTIONAL ROD THREADS CALL PENINSULAR.
FOR OPTIONAL PROXIMITY SWITCH CALL PENINSULAR.
U.S. PATENT NUMBERS: 4,726,282 AND D295,753.

*FOR PORT AND CUSHION POSITIONS REFER TO THE HOW TO ORDER PENINSULAR IHP SERIES HIGH PRESSURE METRIC HYDRAULIC CYLINDERS.

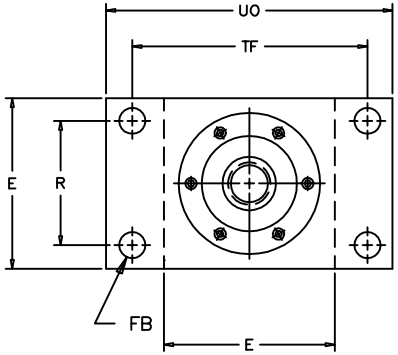

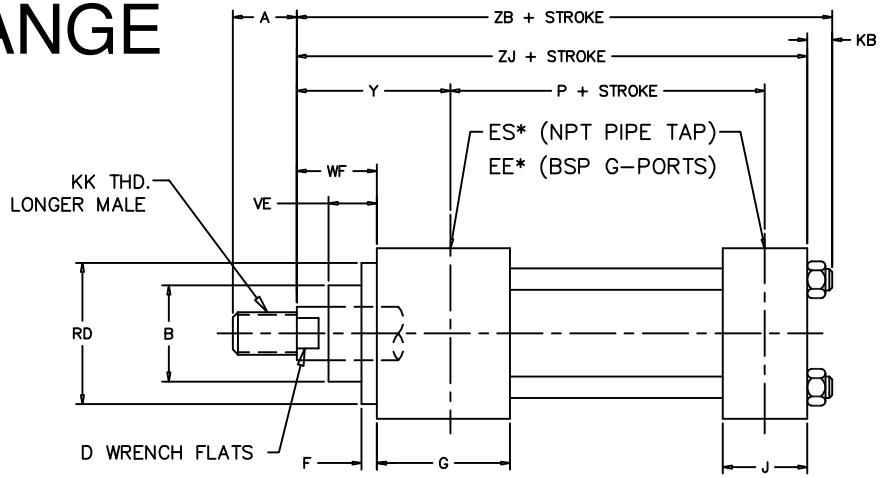

DIMENSIONS IN MILLIMETERS

BORE SIZE	ROD DIAMETER	PENINSULAR "L" STYLE SHOWN KK THD. LONGER MALE	A	B	D	E	BSP G-PORT EE	NPT (INCHES) ES	F	FB	G	J	KB	P	R	RD	TF	UO	VE	WF	Y	ZB	ZJ
40.0	18.0	M14 x 1.5	18.0	30.0	15.0	63.0	3/8	1/2"	10.0	11.0	45.0	38.0	6.5	73.0	41.0	62.0	87.0	110.0	16.0	35.0	62.0	166.0	153.0
	28.0	M20 x 1.5	28.0	42.0	22.0														22.0				
50.0	22.0	M16 x 1.5	22.0	34.0	18.0	75.0	1/2	1/2"	16.0	14.0	45.0	38.0	10.0	74.0	52.0	74.0	105.0	130.0	22.0	41.0	67.0	176.0	159.0
	28.0	M20 x 1.5	28.0	42.0	22.0														22.0				
	36.0	M27 x 2	36.0	50.0	30.0														25.0				
63.0	28.0	M20 x 1.5	28.0	42.0	22.0	90.0	1/2	1/2"	16.0	14.0	45.0	38.0	10.0	80.0	65.0	75.0	117.0	145.0	22.0	48.0	71.0	185.0	168.0
	36.0	M27 x 2	36.0	50.0	30.0											88.0			25.0				
	45.0	M33 x 2	45.0	60.0	39.0														29.0				
80.0	36.0	M27 x 2	36.0	50.0	30.0	115.0	3/4	3/4"	20.0	18.0	50.0	45.0	13.0	93.0	83.0	82.0	149.0	180.0	25.0	51.0	77.0	212.0	190.0
	45.0	M33 x 2	45.0	60.0	39.0											105.0			29.0				
	56.0	M42 x 2	56.0	72.0	48.0														29.0				
100.0	45.0	M33 x 2	45.0	60.0	39.0	130.0	3/4	3/4"	22.0	18.0	50.0	45.0	13.0	101.0	97.0	92.0	162.0	200.0	29.0	57.0	82.0	225.0	203.0
	56.0	M42 x 2	56.0	72.0	48.0											125.0			29.0				
	70.0	M48 x 2	63.0	88.0	62.0														32.0				
125.0	56.0	M42 x 2	56.0	72.0	48.0	165.0	1	3/4"	20.0	22.0	58.0	58.0	18.0	117.0	126.0	105.0	208.0	250.0	29.0	57.0	86.0	260.0	232.0
	70.0	M48 x 2	63.0	88.0	62.0											150.0			32.0				
	90.0	M64 x 3	85.0	108.0	80.0														32.0				
160.0	70.0	M48 x 2	63.0	88.0	62.0	205.0	1	1"	22.0	26.0	58.0	58.0	22.0	130.0	155.0	125.0	253.0	300.0	32.0	57.0	86.0	279.0	245.0
	90.0	M64 x 3	85.0	108.0	80.0				25.0							170.0			32.0				
	110.0	M80 x 3	95.0	133.0	100.0														32.0				
200.0	90.0	M64 x 3	85.0	108.0	80.0	245.0	1 1/4	1 1/2"	22.0	33.0	76.0	76.0	24.0	165.0	190.0	150.0	300.0	360.0	32.0	57.0	98.0	336.0	299.0
	110.0	M80 x 3	95.0	133.0	100.0				25.0							210.0			32.0				
	140.0	M100 x 3	112.0	163.0	128.0														32.0				

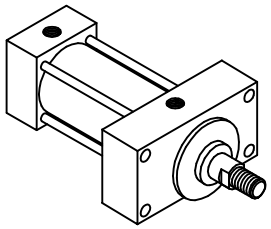

IHP 28 (ME5)

ISO 6020-2

7.28

FILE: 7.28_IHP28S2.dwg REV: 02/09/2010

27650 Groesbeck Hwy • Roseville, MI 48066-2759 • Phone 586.775.7211 • Fax 586.775.4545 • Toll Free 800.526.7968 • e-mail: sales@peninsularcylinders.com • www.peninsularcylinders.com

"PUSH" & "PULL" Force Charts - Pneumatic Cylinders

for Peninsular - Series IHP - High-Pressure, METRIC Hydraulic Cylinders

"PUSH" - (EXTENDED CYLINDER STROKE) FORCES IN POUNDS & KILOGRAMS

Bore in MM	Bore Size in Inches	Hydraulic Working Line Pressure (PSI and Bars)								
		PSI	500	750	1000	1250	1500	2000	2500	3000
		BARS	34.5	51.7	69.0	86.2	103.4	137.9	172.4	206.9
40	1 ½	LBs	884	1325	1767	2209	2651	3534	4418	5301
		KGs	401	601	802	1002	1202	1603	2004	2405
50	2	LBs	1571	2356	3142	3927	4712	6283	7854	9425
		KGs	713	1069	1425	1781	2138	2850	3563	4275
63	2 ½	LBs	2454	3682	4909	6136	7363	9818	12272	14726
		KGs	1113	1670	2227	2783	3340	4453	5567	6680
80	3 ¼	LBs	4148	6222	8296	10370	12444	16592	20739	24887
		KGs	1881	2822	3763	4704	5644	7526	9407	11289
100	4	LBs	6283	9425	12566	15708	18850	25133	31416	37699
		KGs	2850	4275	5700	7125	8550	11400	14250	17100
125	5	LBs	9818	14726	19635	24544	29453	39270	49088	58905
		KGs	4453	6680	8906	11133	13360	17813	22266	26719
160	6	LBs	14137	21206	28274	35343	42412	56549	70686	84823
		KGs	6413	9619	12825	16032	19238	25651	32063	38476
200	8	LBs	25133	37699	50266	62832	75398	100531	125664	150797
		KGs	11400	17100	22800	28501	34201	45601	57001	68401

English / Metric

Note: "Push" Forces in Pounds = (Cylinder Bore Diameter)^2 x .7854 x Line Pressure

"PULL" - RETRACTED CYLINDER STROKE) FORCES IN POUNDS & KILOGRAMS

Bore in MM	Bore Size Inches	Rod DIA MM	Hydraulic Working Line Pressure (PSI and Bars)								
			PSI	500	750	1000	1250	1500	2000	2500	3000
			BARS	34.5	51.7	69.0	86.2	103.4	137.9	172.4	206.9
40	1 ½	18	LBs	686	1030	1373	1716	2059	2745	3432	4118
			KGs	311	467	623	778	934	1245	1557	1868
		28	LBs	406	610	813	1016	1219	1625	2032	2438
			KGs	184	276	369	461	553	737	922	1106
50	2	22	LBs	1276	1914	2552	3190	3829	5105	6381	7657
			KGs	579	868	1158	1447	1737	2316	2894	3473
		28	LBs	1094	1640	2187	2734	3281	4374	5468	6562
			KGs	496	744	992	1240	1488	1984	2480	2976
		36	LBs	782	1173	1564	1955	2346	3128	3910	4692
			KGs	355	532	709	887	1064	1419	1773	2128

Rev. 2/9/2010

The "PULL" Chart is continued on the next page

"PUSH" & "PULL" Force Charts - Pneumatic Cylinders

for Peninsular - Series IHP - High-Pressure, METRIC Hydraulic Cylinders

continued from previous page

"PULL" - RETRACTED CYLINDER STROKE) FORCES IN POUNDS & KILOGRAMS

Bore in MM	Bore Size Inches	Rod DIA MM	Hydraulic Working Line Pressure (PSI and Bars)								
			PSI	500	750	1000	1250	1500	2000	2500	3000
			BARS	34.5	51.7	69.0	86.2	103.4	137.9	172.4	206.9
63	2 ½	28	LBs	1977	2966	3954	4943	5932	7909	9886	11863
			KGs	897	1345	1794	2242	2691	3587	4484	5381
		36	LBs	1666	2498	3331	4164	4997	6662	8328	9993
			KGs	755	1133	1511	1889	2266	3022	3777	4533
		45	LBs	1222	1833	2444	3054	3665	4887	6109	7331
			KGs	554	831	1108	1386	1663	2217	2771	3325
88	3 ¼	36	LBs	3359	5039	6718	8398	10077	13436	16795	20154
			KGs	1524	2285	3047	3809	4571	6095	7618	9142
		45	LBs	2915	4373	5831	7288	8746	11661	14577	17492
			KGs	1322	1984	2645	3306	3967	5290	6612	7934
		56	LBs	2239	3359	4478	5598	6717	8956	11195	13434
			KGs	1016	1523	2031	2539	3047	4063	5078	6094
100	4	45	LBs	5051	7576	10101	12627	15152	20202	25253	30304
			KGs	2291	3436	4582	5727	6873	9164	11455	13746
		56	LBs	4374	6562	8749	10936	13123	17497	21872	26246
			KGs	1984	2976	3968	4961	5953	7937	9921	11905
		70	LBs	3301	4951	6601	8252	9902	13203	16503	19804
			KGs	1497	2246	2994	3743	4492	5989	7486	8983
125	5	56	LBs	7909	11863	15817	19772	23726	31635	39543	47452
			KGs	3587	5381	7175	8968	10762	14349	17937	21524
		70	LBs	6835	10252	13670	17087	20505	27340	34175	41010
			KGs	3100	4650	6201	7751	9301	12401	15502	18602
		90	LBs	4887	7331	9774	12218	14661	19549	24436	29323
			KGs	2217	3325	4434	5542	6650	8867	11084	13301
160	6	70	LBs	11155	16732	22309	27887	33464	44619	55773	66928
			KGs	5060	7590	10119	12649	15179	20239	25299	30358
		90	LBs	9207	13810	18414	23017	27621	36827	46034	55241
			KGs	4176	6264	8352	10441	12529	16705	20881	25057
		110	LBs	6772	10158	13544	16930	20316	27089	33861	40633
			KGs	3072	4608	6144	7680	9216	12287	15359	18431
200	8	90	LBs	20202	30304	40405	50506	60607	80810	101012	121215
			KGs	9164	13746	18328	22910	27492	36655	45819	54983
		110	LBs	17768	26652	35535	44419	53303	71071	88839	106606
			KGs	8059	12089	16119	20149	24178	32238	40297	48357
		140	LBs	13203	19804	26405	33006	39608	52810	66013	79216
			KGs	5989	8983	11977	14972	17966	23955	29943	35932

English / Metric

Note: "Pull" Forces in Pounds = (Cylinder Bore Diameter)^2 - (Cylinder Rod Diameter)^2 x .7854 x Line Pressure

Rev. 2/9/2010

PENINSULAR®
CYLINDER CO.

SECTION 8

NFPA Cylinder Accessories

TABLE OF CONTENTS

TOPIC	NFPA Cylinder Accessories Page Number
Accessory Interchangeability Schematic Sheet	8.00
Custom Rod-End Clevis Assembly - NFPA Interchangeable	8.01
Standard NFPA Rod-End Clevis (with Straight Clevis Pin)	8.02
NFPA Straight Clevis Pins - Cotter Pin & Snap Ring Designs	8.03
NFPA Eye Bracket	8.04
NFPA Clevis Bracket	8.05
NFPA Rod Eye (with Straight Clevis Pin)	8.06
Spherical Rod Eye	8.07
Trunnion Mounting Assembly	8.08
Rod Alignment Coupler	8.08
Threaded Male Piston Rod Studs	8.10
Extended Key Retainer	8.12
Rod End Coupler and Weld Plate	8.13
Spooled Rod End	8.14

www.peninsularcylinders.com

1-800-526-7968

27650 Groesbeck Highway * Roseville, Michigan 48066-2758

Phone: (586)-775-7211 * Fax: (586) 775-4545 * email: sales@peninsularcylinders.com

Accessory Interchangeability Schematic Sheet

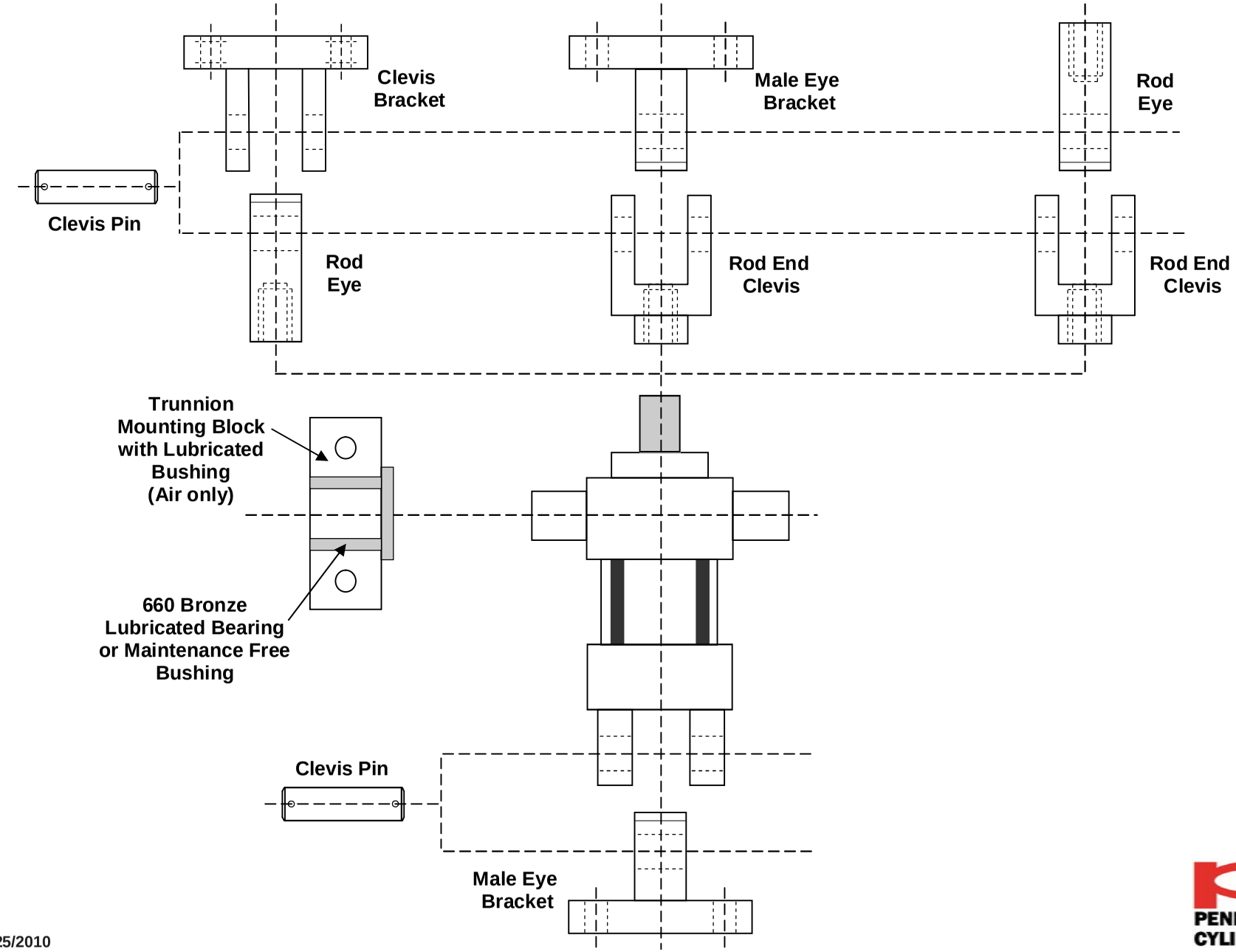

8.00

REV 02/25/2010

PENINSULAR® CYLINDER CO.

CUSTOM ROD END CLEVIS ASSEMBLY

(NFPA INTERCHANGEABLE)

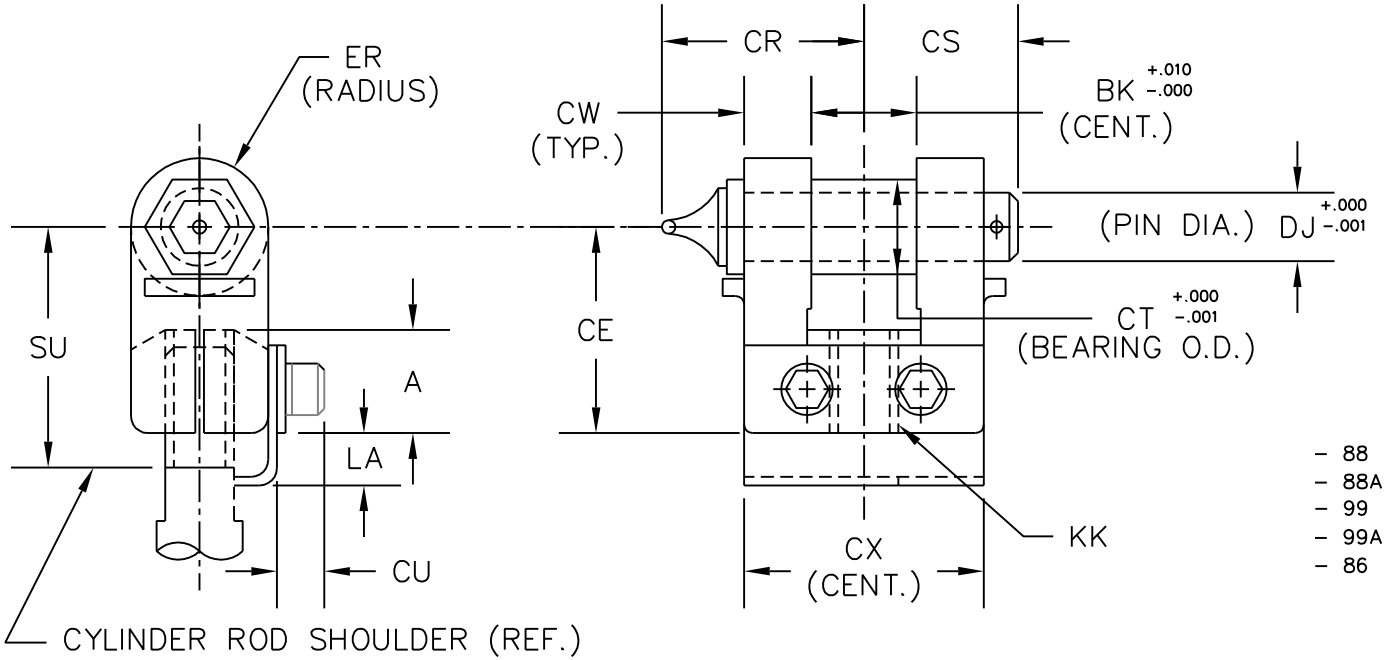

NOTE:

For quality assurance a Rod End Clevis Assembly with a Pin Bushing is recommended. The Pin Bushing O.D. is NOT NFPA interchangeable. EXAMPLE: C1150–88.

Sizes: C1150
C1200
C1400
C1600
C1800

- 88 Non–Rotate Grease Zerk Pin with Pin bushing
- 88A Straight Pin – No Pin Bushing
- 99 Non–Rotate Grease Zerk Pin – No Pin Bushing
- 99A Straight Pin with Pin Bushing
- 86 Straight Pin – No Pin Bushing – No Adjusting Bracket.

CYL. BORE	ORDER NUMBER	KK	A	BK	CE	CR	CS	CT	CU	CW	CX	DJ	ER	LA	SU
1.50	C1150–88	1/2"–20	.75	.765	1.50	1.47	1.12	.6905	.57	.49	1.75	.500	.50	.31	1.75
1.50	C1150–88P	5/8"–18	.75	.765	1.50	1.47	1.12	.6905	.57	.49	1.75	.500	.50	.31	1.75
1.50	C1150–88G	7/16"–20	.75	.765	1.50	1.47	1.12	.6905	.57	.49	1.75	.500	.50	.31	1.75
2.00 2.50 3.25	C1200–88	3/4"–16	1.12	1.265	2.38	1.91	1.49	.9415	.75	.62	2.06	.75	.75	.40	2.63
4.00 5.00	C1400–88	1"–14	1.62	1.515	3.12	2.16	1.74	1.1915	.75	.74	2.50	1.00	1.00	.44	3.38
6.00	C1600–88	1 1/4"–12	2.00	2.015	4.12	2.76	2.24	1.5665	.64	.99	3.00	1.375	1.375	.74	4.38
8.00 10.00	C1800–88	1 1/2"–12	2.25	2.515	4.50	3.26	2.74	1.9415	.64	1.24	4.00	1.75	1.75	.74	4.75

PENINSULAR® CYLINDER COMPANY

27650 Groesbeck Highway Roseville Michigan 48066–2759 Telephone: 586–775–7211 Fax: 586–775–4545
Toll Free: 800–526–7968 Internet: http://www.peninsularcylinders.com Email: sales@peninsularcylinders.com

REV. 14 JAN 2003

Standard NFPA Rod-End Clevis

Model - 86

(with Pin Attached)

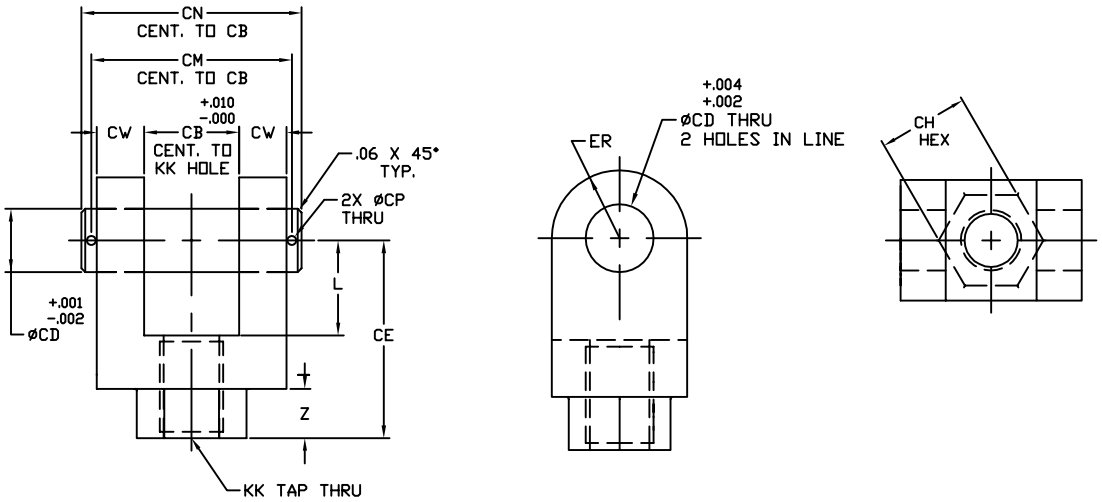

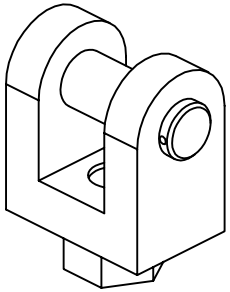

THIS ROD END CLEVIS HAS

(1) STRAIGHT CLEVIS PIN &
(2) COTTER PINS INCLUDED

PART No.	CB	CD	CE	CH	CM	CN	CP	CW	L	KK	ER	Z
C1150-86 C1150-86G C1150-86P	.765	.500	1.500	1.000	1.938	2.281	.106	.500	.750	7/16-20 1/2-20 5/8-18	.500	.38
C1200-86 C1200-86G	1.265	.750	2.375	1.250	2.719	3.094	.140	.625	1.250	3/4-16 7/8-14	.750	.56
C1400-86 C1400-86G	1.515	1.000	3.125	1.500	3.219	3.594	.140	.750	1.500	1-14 1 1/4-12	1.000	.78
C1600-86 C1600-86G	2.031	1.375	4.125	2.000	4.250	4.656	.173	1.000	2.125	1 1/4-12 1 1/2-12	1.375	.97
C1800-86 C1800-86G	2.531	1.750	4.500	2.375	5.250	5.656	.173	1.250	2.25	1 1/2-12 1 3/4-12	1.750	.91
C1900-86 C1900-86G	2.531	2.000	5.500	2.938	5.281	5.719	.204	1.250	2.500	1 7/8-12 2 1/4-12	2.000	1.25
C1901-86	3.031	2.500	6.500	3.500	6.313	6.781	.219	1.500	3.000	2 1/4-12	2.500	1.50
C1902-86 C1903-86	3.031	3.000	6.750	3.875	6.344	6.844	.250	1.500	3.250	2 1/2-12 3-12	2.750	1.50
C1904-86	4.031	3.500	8.500	5.000	8.406	8.969	.312	2.000	4.000	3 1/4-12	3.500	2.00
C1906-86	4.531	4.000	10.000	6.125	9.406	9.969	.312	2.250	4.500	4-12	4.000	2.50
C1908-86	6.031	5.000	12.750	7.500	12.406	12.969	.312	3.000	5.750	5-12	5.000	3.00

Rev. 02/25/2010 FILE: 8.02_NFPA Rod End Clevis.dwg

PENINSULAR® CYLINDER CO.

NFPA Straight Clevis Pin
Cotter Pin Design

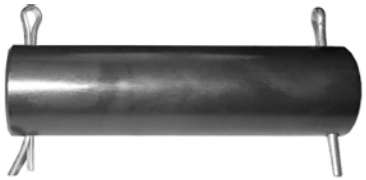

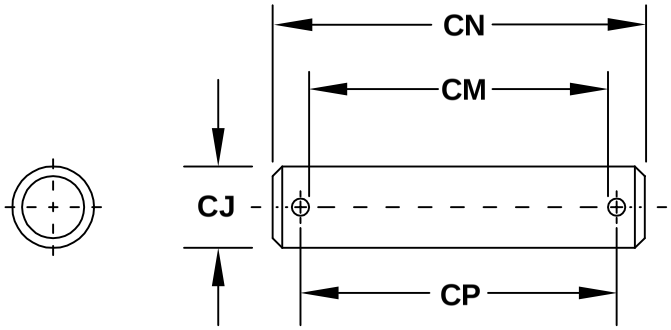

8.03

PART No.	CJ	CN	CM	CP
C1150-66	.50	2.281	1.832	1.938
C1200-66	.75	3.094	2.579	2.719
C1400-66	1.00	3.594	3.079	3.219
C1600-66	1.38	4.656	4.077	4.250
C1800-66	1.75	5.656	5.077	5.250
C1900-66	2.00	5.719	5.077	5.281
C2500-66	2.50	6.781	6.094	6.313
C3000-66	3.00	6.844	6.094	6.344
C3500-66	3.50	8.969	8.094	8.406
C4000-66	4.00	9.969	9.094	9.406

Rev. 02/25/2010 FILE: 8.03_NFPA Stragith Clevis Pins.dwg

NFPA Straight Clevis Pin
Snap Ring Design

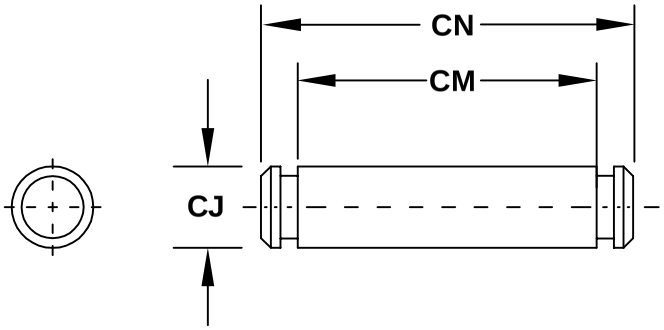

PART No.	CJ	CN	CM
C1150-66G	.50	2.094	1.875
C1200-66G	.75	2.875	2.625
C1400-66G	1.00	3.375	3.125
C1600-66G	1.38	4.485	4.187
C1800-66G	1.75	5.547	5.188
C1900-66G	2.00	5.547	5.188
C2500-66G	2.50	6.625	6.188
C3000-66G	3.00	6.780	6.250
C3500-66G	3.50	8.845	8.125
C4000-66G	4.00	9.845	9.125

PENINSULAR®
CYLINDER CO.

NFPA Pivot Bracket

Model - 76

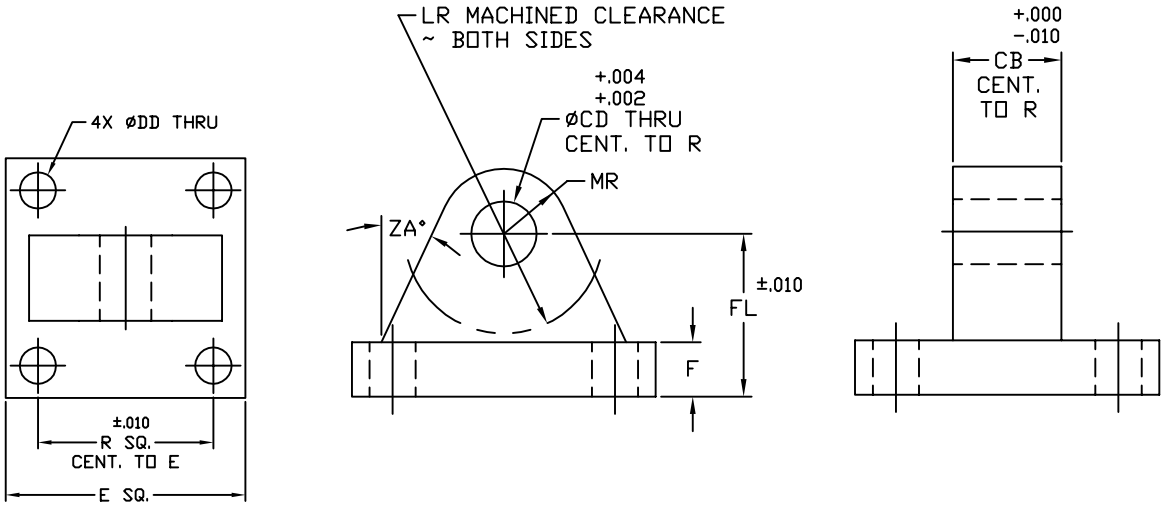

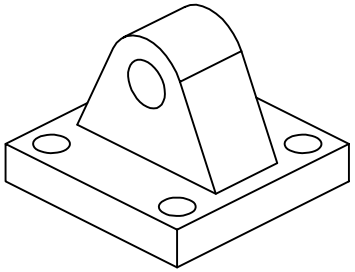

PART No.	CB	CD	DD	E	F	FL	LR	MR	R	ZA
C1150-76	.750	.500	.406	2.500	.375	1.125	.750	.500	1.625	20°
C1200-76	1.250	.750	.531	3.500	.625	1.875	1.250	.750	2.562	25°
C1400-76	1.500	1.000	.656	4.500	.750	2.250	1.500	1.000	3.250	25°
C1600-76	2.000	1.375	.656	5.000	.875	3.000	2.125	1.375	3.812	20°
C1800-76	2.500	1.750	.906	6.500	.875	3.125	2.250	1.750	4.938	20°
C1900-76	2.500	2.000	1.062	7.500	1.000	3.500	2.500	2.000	5.750	25°
C1901-76	3.000	2.500	1.188	8.500	1.000	4.000	3.000	2.500	6.594	20°
C1902-76	3.000	3.000	1.312	9.500	1.000	4.250	3.250	3.000	7.500	20°
C1904-76	4.000	3.500	1.812	12.625	1.688	5.688	4.000	3.500	9.625	25°
C1906-76	4.500	4.000	2.062	14.875	1.938	6.438	4.500	4.000	11.500	25°
C1908-76	6.000	5.000	2.562	17.125	2.188	7.688	5.500	5.000	13.000	15°

Rev. 02/25/2010 FILE: 8.04_Pivot Bracket.dwg

PENINSULAR® CYLINDER CO.

NFPA Clevis Bracket

Model - 78

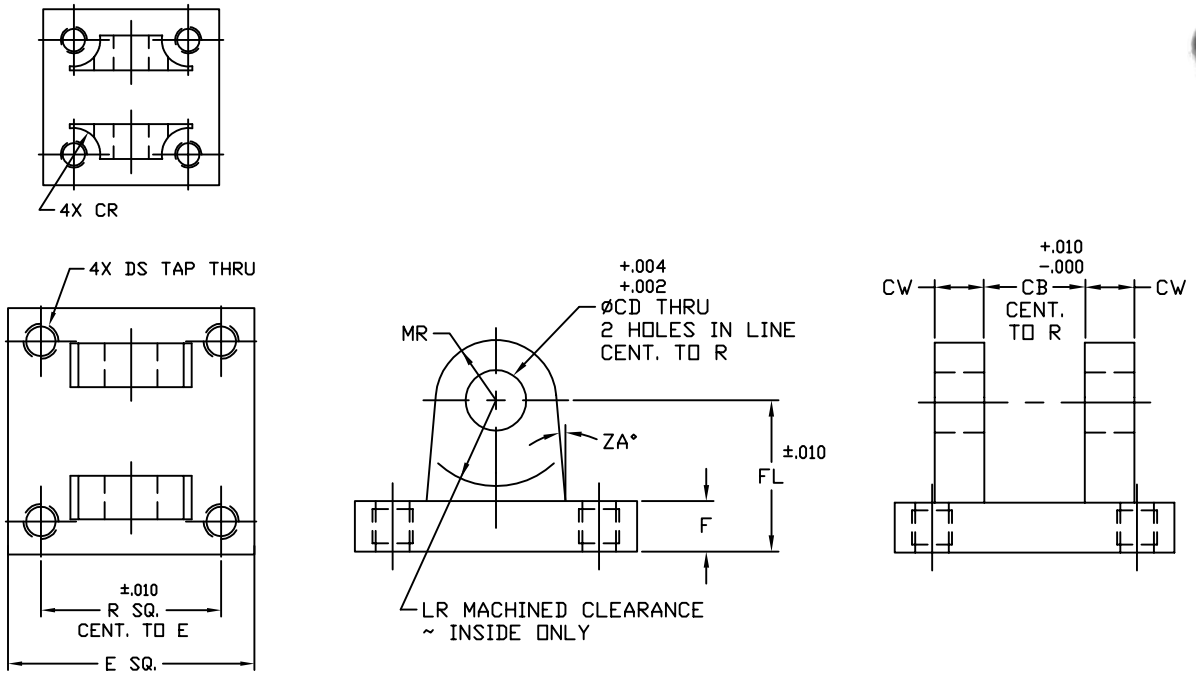

C1150-78

C1200-78

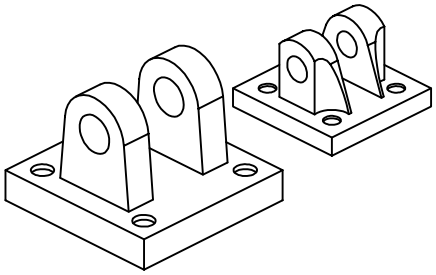

PART No.	CB	CD	CR	CW	DS	E	F	FL	LR	MR	R	ZA
C1150-78	.765	.500	.375	.500	3/8-24	2.500	.375	1.125	.500	.562	1.625	20°
C1200-78	1.265	.750	-	.625	1/2-20	3.500	.625	1.875	1.062	1.062	2.562	5°
C1400-78	1.515	1.000	.562	.750	5/8-18	4.500	.750	2.250	1.250	1.125	3.250	5°
C1600-78	2.031	1.375	.562	1.000	5/8-18	5.000	.875	3.000	1.875	1.750	3.812	5°
C1800-78	2.531	1.750	.750	1.250	7/8-14	6.500	.875	3.125	2.000	1.875	4.938	5°
C1900-78	2.531	2.000	.844	1.250	1-14	7.500	1.000	3.500	2.125	2.125	5.750	5°
C1901-78	3.031	2.500	.938	1.500	1 1/8-12	8.500	1.000	4.000	2.625	2.500	6.594	5°
C1902-78	3.031	3.000	1.031	1.500	1 1/4-12	9.500	1.000	4.250	2.875	2.750	7.500	5°
C1904-78	4.031	3.500	1.406	2.000	1 3/4-12	12.625	1.688	5.688	3.625	3.500	9.625	5°
C1906-78	4.531	4.000	-	2.250	2-12	14.875	1.938	6.438	4.000	4.000	11.500	5°
C1908-78	6.031	5.000	2.000	3.000	2 1/2-12	17.125	2.188	7.688	5.000	5.000	13.000	5°

Rev. 02/25/2010 FILE: 8.05_Clevis Bracket.dwg

PENINSULAR® CYLINDER CO.

NFPA Rod Eye

Model - 65

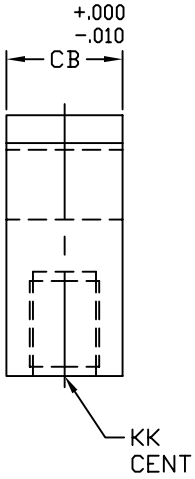

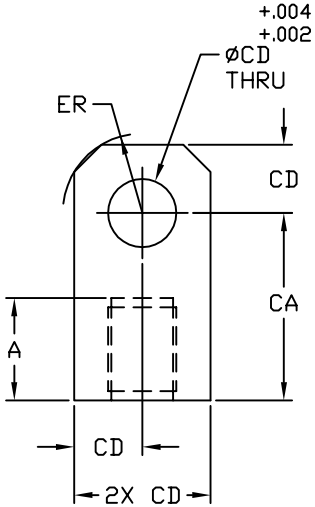

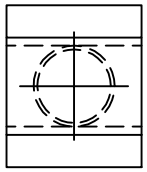

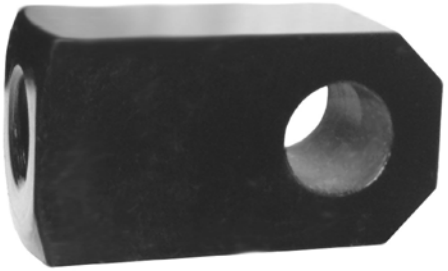

8.06

PART No.	A	CA	CB	CD	ER	KK
C1150-65G	.750	1.500	.750	.500	.625	7/16-20
C1150-65	.750	1.500	.750	.500	.625	1/2-20
C1150-65P	.750	1.500	.750	.500	.625	5/8-18
C1200-65	1.125	2.062	1.250	.750	.875	3/4-16
C1200-65I	1.125	2.062	1.250	.750	.875	7/8-14
C1400-65	1.625	2.812	1.500	1.000	1.188	1-14
C1400-65G	1.625	2.812	1.500	1.000	1.188	1 1/4-12
C1600-65	2.000	3.438	2.000	1.375	1.562	1 1/4-12
C1600-65I	2.000	3.438	2.000	1.375	1.562	1 1/2-12
C1800-65	2.250	4.000	2.500	1.750	2.000	1 1/2-12
C1900-65	3.000	5.000	2.500	2.000	2.500	1 7/8-12
C1901-65	3.500	5.812	3.000	2.500	2.812	2 1/4-12
C1902-65	3.500	6.125	3.000	3.000	3.250	2 1/2-12
C1904-65	4.500	7.625	4.000	3.500	3.875	3 1/4-12
C1906-65	5.500	9.125	4.500	4.000	4.438	4-12
C1908-65	6.500	11.125	6.000	5.000	5.500	5-12

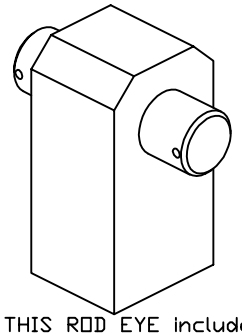

THIS ROD EYE includes

(1) STRAIGHT CLEVIS PIN &
(2) COTTER PINS INCLUDED

PENINSULAR®
CYLINDER CO.

Standard NFPA Spherical Rod Eye

Model - 74

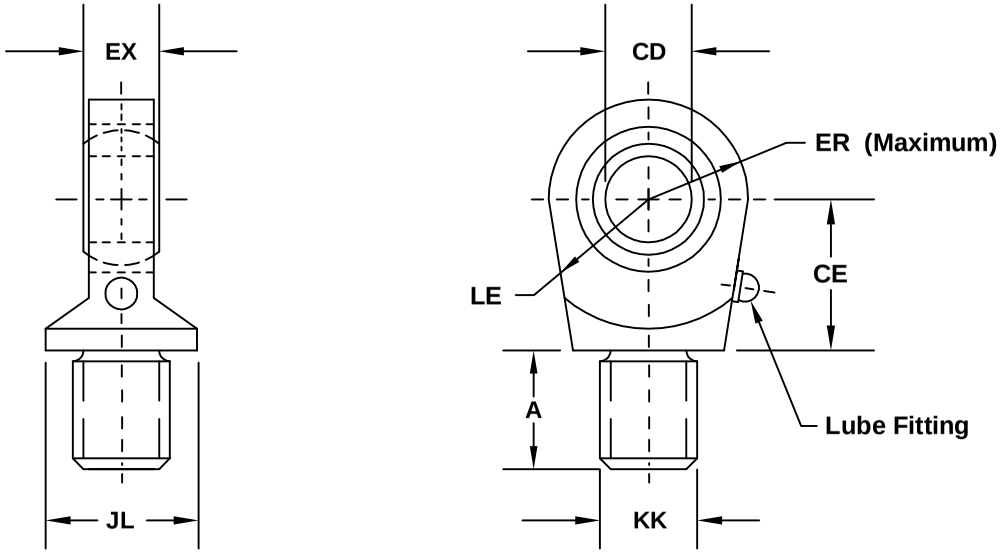

PART No.	CD	A -.0005	CE	EX	ER	LE	KK	JL	LOAD CAP
C1150-74	.5000	.68	.87	.43	.87	.75	7/16" - 20	.87	2,600
C1250-74	.7500	1.00	1.25	.65	1.25	1.06	3/4" - 16	1.31	9,400
C1400-74	1.0000	1.50	1.87	.87	1.37	1.43	1" - 14	1.50	16,800
C1600-74	1.3750	2.00	2.12	1.18	1.18	1.87	1 1/4" - 12	2.00	28,600
C1800-74	1.7500	2.12	2.50	1.53	2.18	2.12	1 1/2" - 12	2.25	43,000
C1900-74	2.0000	2.87	2.75	1.75	2.62	2.50	1 7/8" - 12	2.75	51,000

PENINSULAR® CYLINDER CO.

Trunnion Mounting Assembly

Model - 91

(for pneumatic cylinders only)

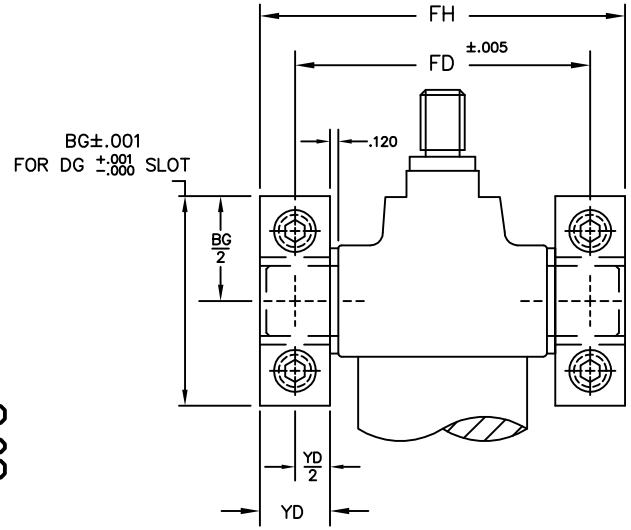

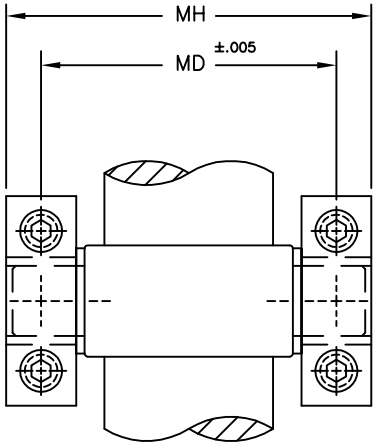

FRONT TRUNNION CYLINDER with

(2) TRUNNION MOUNTING ASSEMBLIES

INTERMEDIATE TRUNNION CYLINDER with

(2) TRUNNION MOUNTING ASSEMBLIES

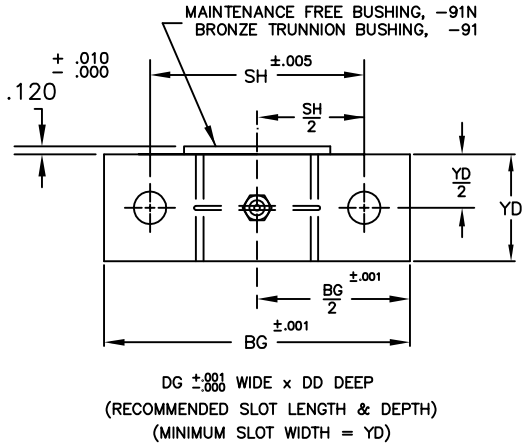

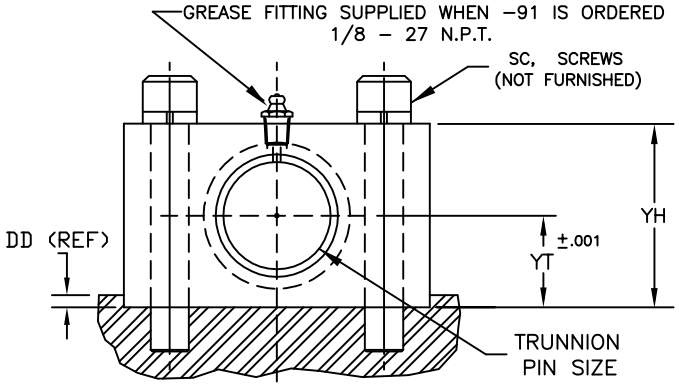

If the recommended "DG" x "DD" slot cannot be provided, another suitable means of preventing the Trunnion Assembly from moving with the push/pull forces of the cylinder MUST be utilized. The Trunnion Mounting Assembly should NEVER be rotated 90° from the position in the above drawing, because loosening of the mounting screws will occur as a result of the push/pull cylinder forces.

ORDER NO.	CYL. BORE	PIN SIZE	BG	DD	DG	FD	FH	MD	MH	SC	SH	YD	YH	YT
C1150-91	1.50	1.00	2.998	.125	3.000	3.250	4.25	3.750	4.75	.38	2.000	1.00	2.00	1.000
C1150-91	2.00	1.00	2.998	.125	3.000	3.750	4.75	4.250	5.25	.38	2.000	1.00	2.00	1.000
C1150-91	2.50	1.00	2.998	.125	3.000	4.250	5.75	4.750	5.75	.38	2.000	1.00	2.00	1.000
C1325-91	3.25	1.00	3.498	.125	3.500	5.000	6.00	5.750	6.75	.50	2.500	1.00	2.00	1.000
C1325-91	4.00	1.00	3.498	.125	3.500	5.750	6.75	6.500	7.50	.50	2.500	1.00	2.00	1.000
C1325-91	5.00	1.00	3.498	.125	3.500	6.750	7.75	7.500	8.50	.50	2.500	1.00	2.00	1.000
C1600-91	6.00	1.375	3.998	.188	4.000	8.125	9.50	9.250	10.62	.50	2.875	1.38	2.38	1.188
C1600-91	8.00	1.375	3.998	.188	4.000	10.125	11.50	11.375	12.75	.50	2.875	1.38	2.38	1.188
C11000-91	10.00	1.750	4.998	.250	5.000	12.625	14.38	14.000	15.75	.62	3.500	1.75	3.00	1.500

8.08

PENINSULAR® CYLINDER CO.

NFPA Rod Alignment Coupler

Model - 79

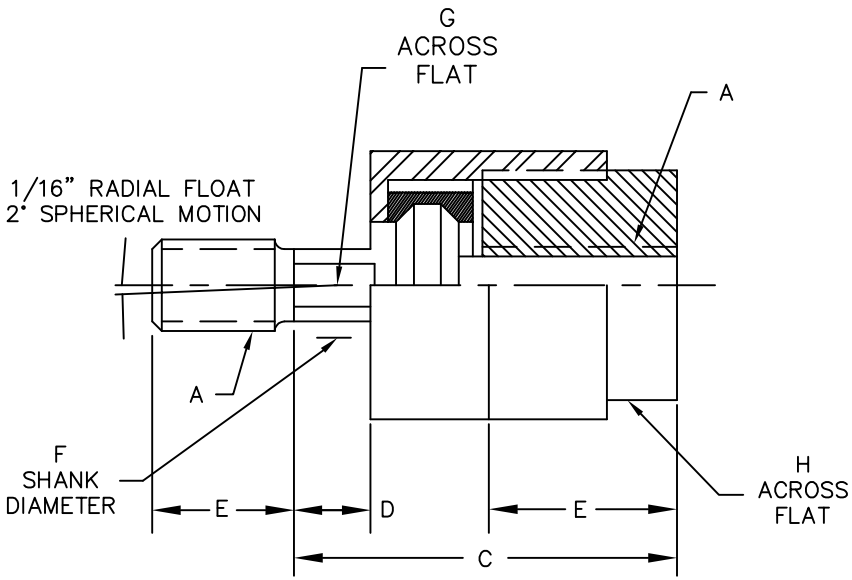

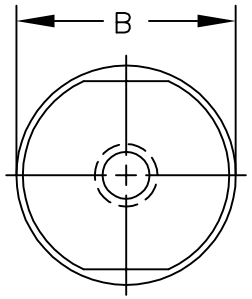

8.09

PART No.	A	B	C	D	E	F	G	H	MAX. Pull At Yield
C1150-79G	7/16"-20	1.25	2.00	0.50	0.75	0.63	0.56	1.13	10,000
C1150-79	1/2"-20	1.25	2.00	0.50	0.75	0.63	0.56	1.13	14,000
C1150-79P	5/8"-18	1.25	2.00	0.50	0.75	0.63	0.50	1.13	14,000
C1200-79	3/4"-16	1.75	2.31	0.31	1.13	0.97	0.88	1.50	34,000
C1200-79G	7/8"-14	1.75	2.31	0.31	1.13	0.97	0.88	1.50	34,000
C1400-79	1"-14	2.50	2.94	0.50	1.63	1.38	1.25	2.25	64,000
C1600-79	1 1/4"-12	2.50	2.94	0.50	1.63	1.38	1.25	2.25	64,000
C1800-79	1 1/2"-12	3.25	4.38	0.81	2.25	1.75	1.50	3.00	120,000
C1800-79G	1 3/4"-12	3.25	4.38	0.81	2.25	1.75	1.50	3.00	120,000
C1900-79	1 7/8"-12	3.75	5.43	0.69	3.00	2.25	1.88	3.50	240,000
C1801-79	2"-12	3.75	5.43	0.69	3.00	2.25	1.88	3.50	240,000
C1901-79	2 1/4"-12	6.75	6.38	3.25	3.50	2.75	2.38	2.88	397,000
C1902-79	2 1/2"-12	7.00	6.50	4.00	3.50	3.25	2.88	3.38	495,000
C1603-79	3"-12	7.00	6.50	4.00	3.50	3.25	2.88	3.38	723,400
C1904-79	3 1/4"-12	9.25	8.50	5.25	4.50	4.00	3.38	4.50	853,800

IN ADDITION:

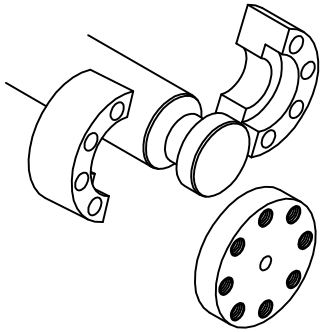

ROD END COUPLERS
ARE ALSO AVAILABLE.
CONSULT FACTORY.

PENINSULAR®
CYLINDER CO.

Threaded Male Piston Rod Stud

The Threaded Male Piston Rod End Stud screws into the NFPA "Short Female" Piston Rod End with Internally Tapped Threads

COLUMN A = Diameter of the Threaded Male Piston Rod Stud

COLUMN B = Number of Threads per Inch (UNF)

COLUMN C = Length of the NFPA Standard Short Male Piston Rod Threads

COLUMN D = Overall Length of the Threaded Male Piston Rod Stud

Note: Other Threaded Male Piston Rod Stud configurations are available other than those shown on the chart. Contact Peninsular.

Part #	A	B	C	D
RS043-62S	7/16	20	.750	1.750
RS043-62MS	7/16	20	1.180	2.610
RS043-62E	7/16	20	1.500	3.250
RS050-62S	1/2	20	.750	1.750
RS050-62MS	1/2	20	1.180	2.610
RS050-62E	1/2	20	1.500	3.250
RS063-62S	5/8	18	.750	1.750
RS063-62MS	5/8	18	1.180	2.610
RS063-62E	5/8	18	1.500	3.250
RS075-62S	3/4	16	1.125	2.500
RS075-62MS	3/4	16	1.375	3.000
RS075-62E	3/4	16	2.250	4.750
RS088-95I	7/8	14	1.125	2.500
RS100-62S	1	14	1.625	3.500
RS100-62MS	1	14	1.750	3.750
RS100-62E	1	14	3.250	6.750
RS125-95I	1 1/4	12	1.625	3.500
RS125-62S	1 1/4	12	2.000	4.250
RS125-62E	1 1/4	12	4.000	8.250
RS150-62S	1 1/2	12	2.250	4.750
RS150-62E	1 1/2	12	4.500	9.250
RS188-62S	1 7/8	12	3.000	6.250

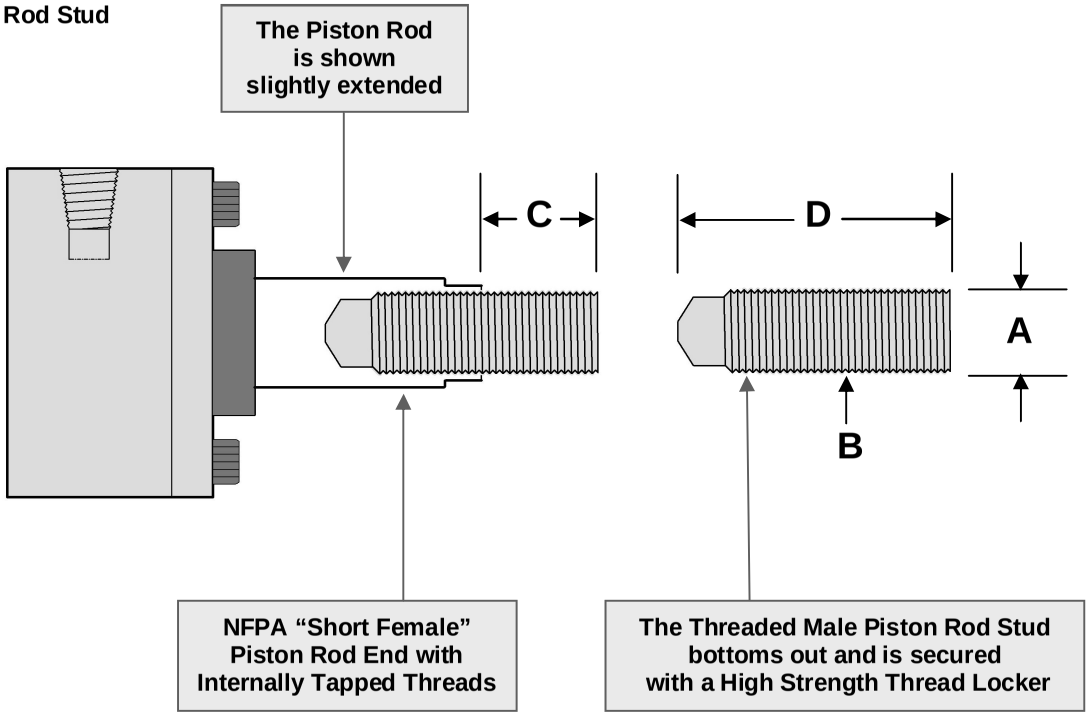

REV. 2/9/2010

PENINSULAR® CYLINDER CO.

Extended Key Retainer

For Model HP - High Pressure Hydraulic Cylinders
Specified in the Part Number as Option: /X
Available for HP1, HP14 & HP16 Mounts

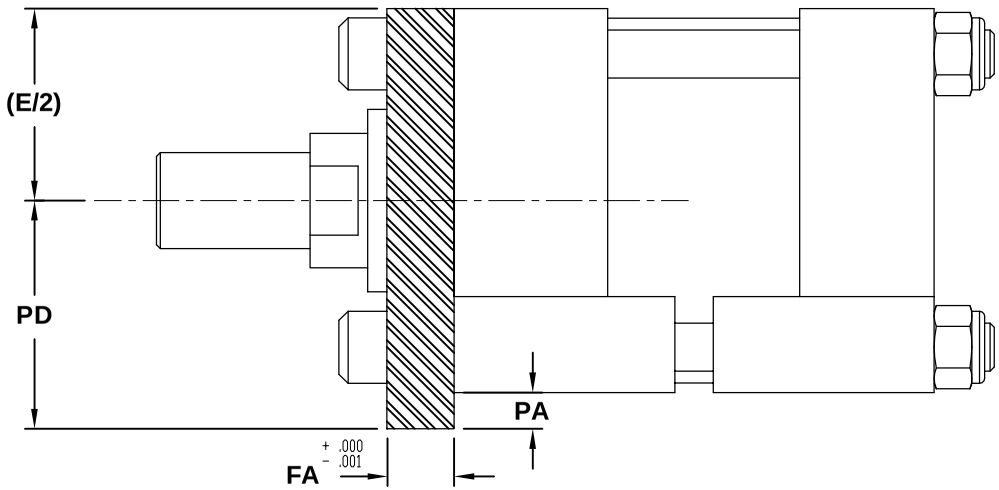

BORE SIZE	FA	(E/2)	PA	PD
1.5	.361	1.250	.188	1.438
2	.611	1.500	.312	1.812
2.5	.611	1.750	.312	2.062
3.25	.736	2.250	.375	2.625
4	.861	2.500	.438	2.938
5	.861	3.250	.438	3.688
6	.986	3.750	.500	4.250
8	.986	4.750	.500	5.250
10	1.236	6.313	.625	6.938
12	1.486	7.438	.750	8.188

PENINSULAR® CYLINDER CO.

Rod End Couplers & Weld Plates

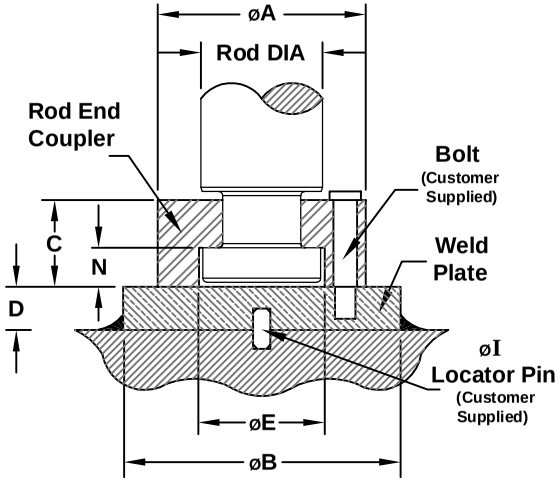

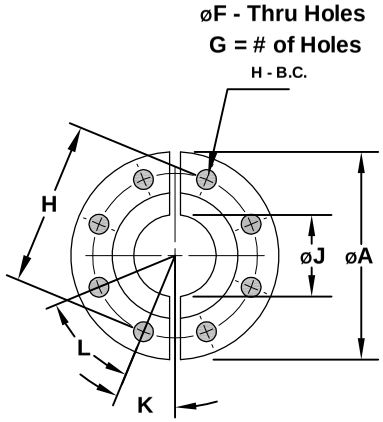

Rod End Coupler

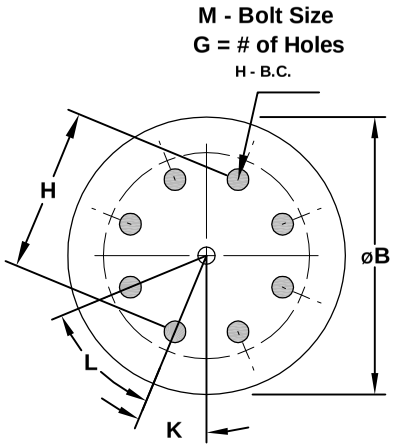

Weld Plate

Normally used with a Spooled Rod End

SEE PAGE 11.XX

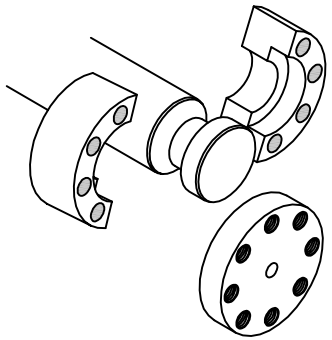

Rod End Coupler PART #	Rod End Coupler Material	Weld Plate PART #	Weld Plate Material	ROD DIA	A	B	C	D	E	F	G	H	I	J	K	L	M	N
FC-062	AISI 1144 CD	WP-062	CD 1018	.625	1.500	2.000	.562	.500	.656	.218	4	1.125	.250	.406	45°	90°	10 -24	.250
FC-100	AISI 1144 CD	WP-100	CD 1018	1.000	2.000	2.500	.875	.500	1.063	.218	6	1.500	.250	.750	30°	60°	1/4 -20	.375
FC-137	AISI 1144 CD	WP-137	CD 1018	1.375	2.500	3.000	1.000	.625	1.438	.343	6	2.000	.250	.938	30°	60°	5/16 -18	.375
FC-175	AISI 1144 CD	WP-175	CD 1018	1.750	3.000	4.000	1.250	.625	1.813	.343	8	2.375	.250	1.187	22.5°	45°	5/16 -18	.500
FC-200	AISI 1144 CD	WP-200	CD 1018	2.000	3.500	4.000	1.625	.750	2.063	.406	12	2.688	.375	1.438	15°	30°	3/8 -16	.625
FC-250	AISI 1144 CD	WP-250	CD 1018	2.500	4.000	4.500	1.875	.750	2.625	.406	12	3.188	.375	1.875	15°	30°	3/8 -16	.750
FC-300	AISI 1144 CD	WP-300	CD 1018	3.000	5.000	5.500	2.375	1.000	3.125	.531	12	4.000	.375	2.375	15°	30°	1/2 -13	.875
FC-350	C1119 MOD	WP-350	A 36 HRS	3.500	5.875	7.000	2.625	1.000	3.625	.656	12	4.688	.375	2.625	15°	30°	5/8 -11	1.000
FC-400	C1119 MOD	WP-400	A 36 HRS	4.000	6.375	7.000	2.625	1.000	4.250	.656	12	5.188	.357	3.125	15°	30°	5/8 -11	1.000
FC-450	C1119 MOD	WP-450	A 36 HRS	4.500	6.875	8.000	3.125	1.000	4.625	.656	12	5.688	.375	3.625	15°	30°	5/8 -11	1.500
FC-500	C1119 MOD	WP-500	A 36 HRS	5.000	7.375	8.000	3.125	1.000	5.125	.656	12	6.188	.375	4.000	15°	30°	5/8 -11	1.500
FC-550	C1119 MOD	WP-550	A 36 HRS	5.500	8.250	9.000	3.875	1.250	5.625	.781	12	6.875	.375	4.500	15°	30°	3/4 -10	1.875

PENINSULAR® CYLINDER CO.

Spooled Rod End

Note: The Spooled Rod End is in Addition To (M, F, D, I & A) Threaded Rod Ends and is Specified in the Part Number by the Letter "S".

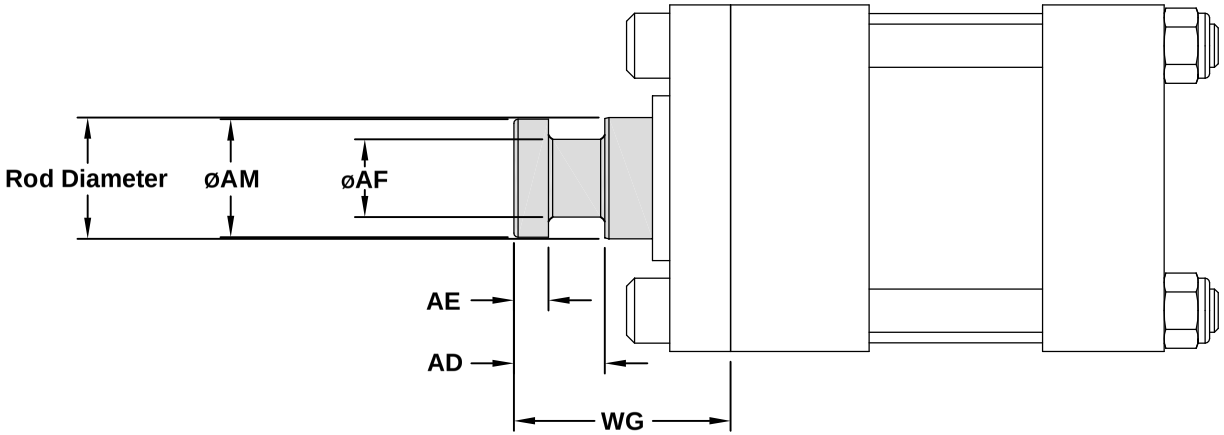

ROD Diameter	AD	AE	AF	AM	WG
.625	.625	.250	.375	.575	1.750
1.000	.938	.375	.688	.950	2.375
1.375	1.062	.375	.875	1.325	2.750
1.750	1.312	.500	1.125	1.700	3.125
2.000	1.688	.625	1.375	1.950	3.750
2.500	1.938	.750	1.750	2.450	4.500
3.000	2.434	.875	2.250	2.950	4.875
3.500	2.688	1.000	2.500	3.450	5.625
4.000	2.688	1.000	3.000	3.950	5.750
4.500	3.188	1.500	3.500	4.450	6.500
5.000	3.188	1.500	3.875	4.950	6.625
5.500	3.938	1.875	4.375	5.450	7.500
7.000	4.062	2.000	5.750	6.950	8.437
8.000	4.062	2.000	6.500	7.950	8.687
9.000	4.625	2.375	7.250	8.950	8.750
10.000	4.625	2.375	8.000	9.950	97.500

Rod End Couplers are available for Spooled Rod Ends

SEE PAGE 11.XX

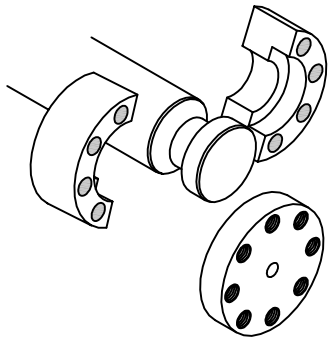

PENINSULAR® CYLINDER CO.

SECTION 9

METRIC Air Cylinder Accessories

TABLE OF CONTENTS

TOPIC	METRIC Cylinder Accessories Page Number
METRIC Rod-End Clevis (with Pin attached)	9.00
METRIC Male Eye Bracket	9.01
METRIC Trunnion Mounting Assembly	9.02
METRIC Trunnion Pillow Block - NAAMS Interchangeable	9.03
METRIC Trunnion Pillow Block Mounting Bracket - NAAMS	9.04
METRIC Straight Clevis Pin, Pin Bushing & Rear Clevis Pin	9.05
METRIC Coupling Plate	9.06
METRIC Coupling Plate Nut	9.07
METRIC Rod Alignment Coupler	9.08
METRIC Standard Rod-End Clevis	9.09

www.peninsularcylinders.com

1-800-526-7968

27650 Groesbeck Highway * Roseville, Michigan 49066-2759

Phone: (596)-775-7211 * Fax: (596) 775-4545 * email: sales@peninsularcylinders.com

CUSTOM METRIC ROD END CLEVIS

NORTH AMERICAN AUTOMOTIVE METRIC STANDARDS
™NAAMS

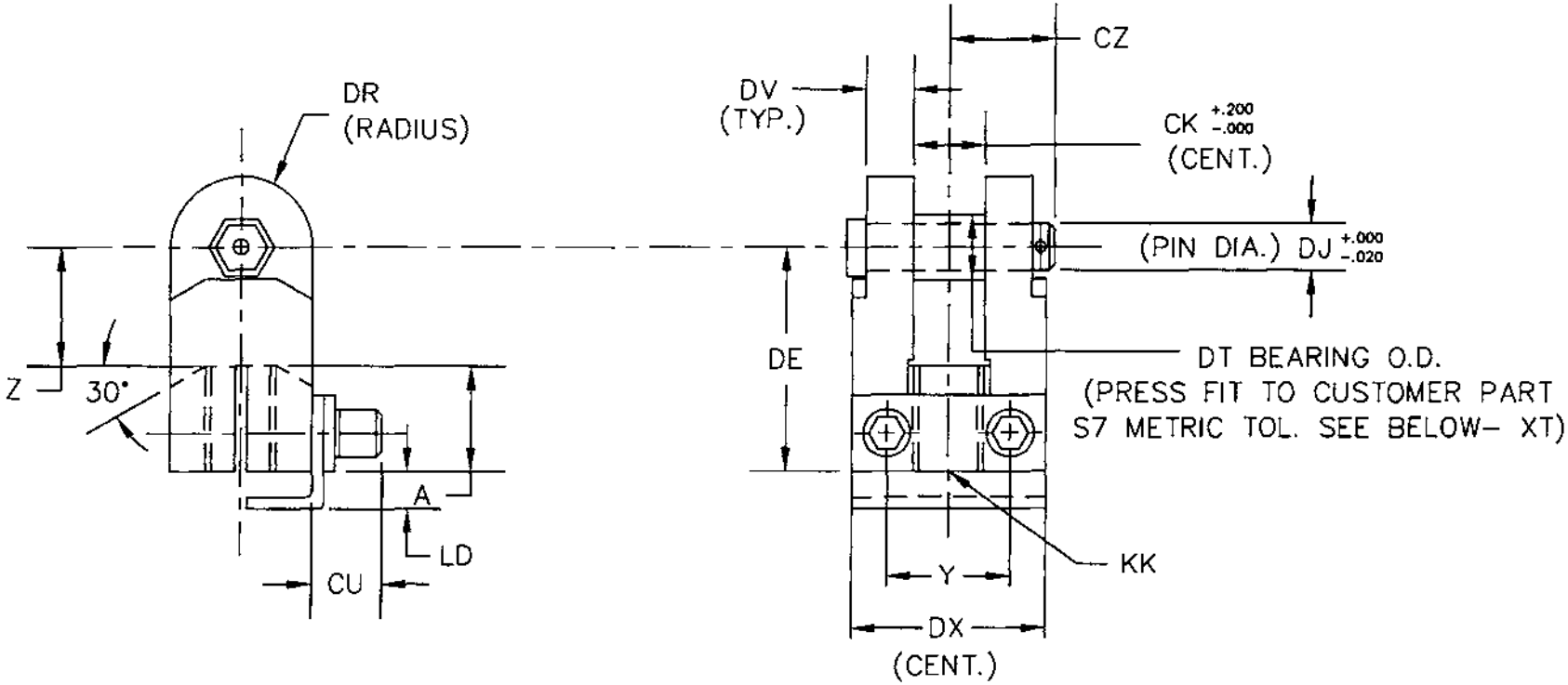

NAAM'S CODE	CYL. BORE	ORDER NUMBER	KK	A	CK	CU	CZ	DE	DJ	DR	DT	DV	DX	LD	XZ	Y	Z
A630310	32	IF1150-63	M10 x 1.25	19.0	20.0	18.0	28.0	38.0	12.0	13.0	17.068/17.043	12.0	45.0	8.0	17.000/17.018	26.9	19.0
A630412	40	IF1150-64	M12 x 1.25	19.0	20.0	18.0	28.0	38.0	12.0	13.0	17.068/17.043	12.0	45.0	8.0	17.000/17.018	26.9	19.0
A630516	50 & 63	IF1200-73	M16 x 1.5	29.0	20.0	20.0	30.0	60.0	15.0	19.0	20.071/20.046	12.0	53.0	10.0	20.000/20.021	35	31.0
A630820	80 & 100	IF1400-73	M20 x 1.5	40.0	32.0	20.0	39.0	80.0	20.0	25.0	25.096/25.046	15.0	64.0	12.0	25.000/25.021	44.5	40.0
A631227	125	IF1400-63	M27 x 2.0	42.0	38.0	20.0	43.0	80.0	25.0	25.0	30.100/30.050	19.0	76.0	14.0	30.000/30.025	44.5	38.0
A631636	160	IF1400-64	M36 x 2.0	42.0	38.0	20.0	43.0	80.0	25.0	25.0	30.100/30.050	19.0	76.0	14.0	30.000/30.025	46	38.0

METRIC

PENINSULAR® CYLINDER COMPANY

27650 Groesbeck Highway Roseville Michigan 48066-2759 Telephone: 586-775-7211 Fax: 586-775-4545

METRIC MALE EYE BRACKET–(NAAMS PIVOT MOUNT BRACKET)

(USED WITH REAR CLEVIS MOUNT IF3 ISO CYLINDER)

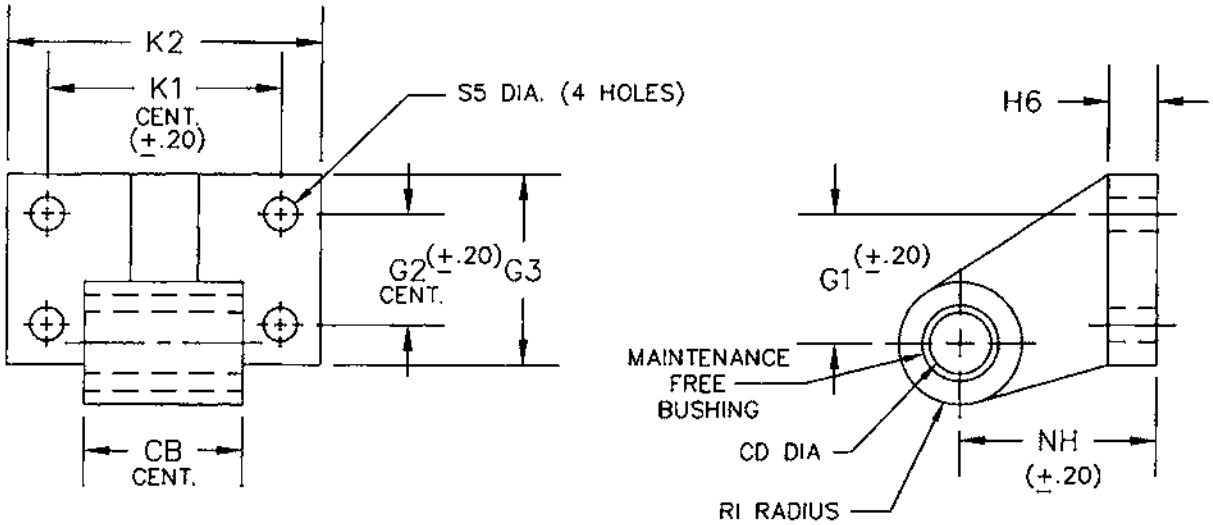

NAAMS CODE	BORE	ORDER NO.	CB	CD	G1	G2	G3	H6	K1	K2	NH	R1	S5	CLEVIS PIN DIA.
A611032	32	IF32–76	25.8/25.4	10.010/10.036	21	18	31	8	38	51	32	10	5.5	10.000/9.964
A611240	40	IF40–76	27.8/27.4	12.010/12.043	24	22	35	10	41	54	36	11	5.5	12.000/11.957
A611250	50	IF50–76	31.8/31.4	12.010/12.043	33	30	45	12	50	65	45	13	6.6	12.000/11.957
A611663	63	IF63–76	39.8/39.4	16.010/16.043	37	35	50	12	52	67	50	15	6.6	16.000/15.957
A611680	80	IF80–76	49.8/49.4	16.010/16.043	47	40	60	14	66	86	63	15	9	16.000/15.957
A612010	100	IF100–76	59.8/59.4	20.010/20.052	55	50	70	15	76	96	71	19	9	20.000/19.948
A612512	125	IF125–76	69.5/68.5	25.010/25.052	70	60	90	22	94	124	90	23	11	25.000/24.948
A613016	160	IF160–76	89.5/88.5	30.010/30.052	97	88	126	25	118	156	115	32	14	30.000/29.948
	200	IF200–76	89.5/88.5	30.010/30.052	105	90	130	30	122	162	135	32	16	30.000/29.948
	250	IF250–76	109.5/108.5	40.010/40.062	128	110	160	35	150	200	165	40	22	40.000/39.938

PENINSULAR® CYLINDER COMPANY

27650 Groesbeck Highway Roseville Michigan 48066–2759 Telephone: 586–775–7211 Fax: 586–775–4545

METRIC TRUNNION MOUNTING ASSEMBLY

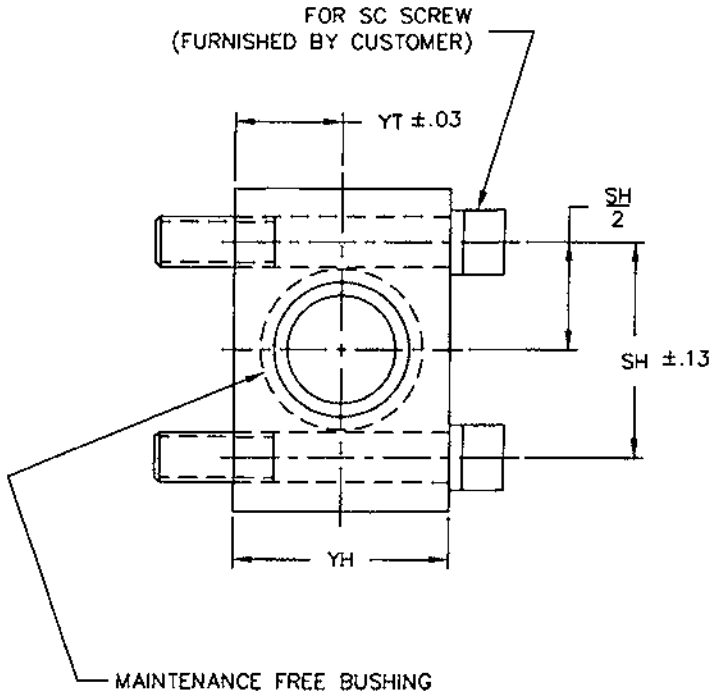

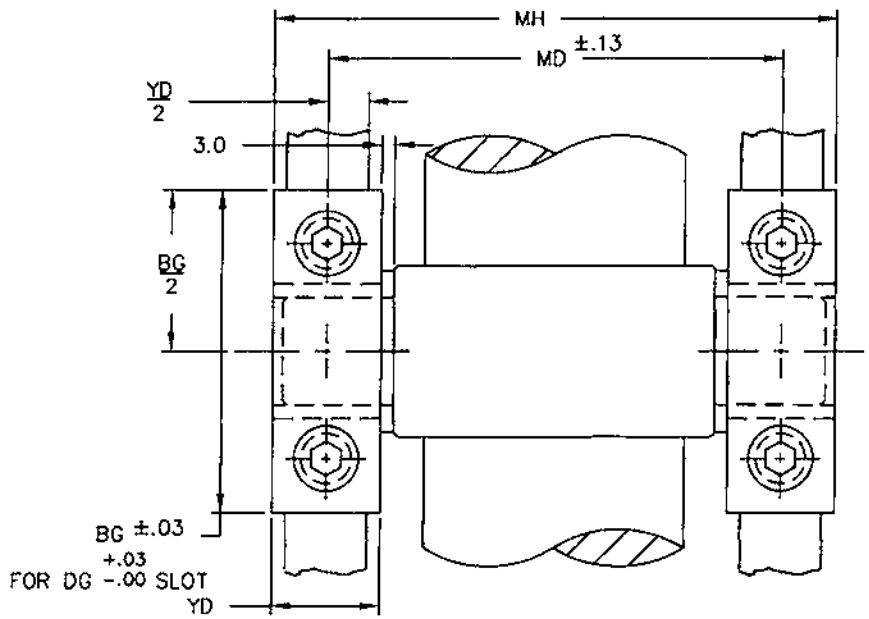

CENTER TRUNNION CYLINDER WITH TWO (2) METRIC TRUNNION MOUNTING ASSEMBLIES.

CYL. BORE	ORDER NO.	BG	DG	MD	MH	SC	SH	YD	YH	YT
40 MM	IF40-91N	55.00	55.06	87.00	105	M8	36.00	18	36	18.00
50 MM	IF40-91N	55.00	55.06	99.00	117	M8	36.00	18	36	18.00
63 MM	IF63-91N	65.00	65.06	116.00	136	M10	42.00	20	40	20.00
80 MM	IF63-91N	65.00	65.06	136.00	156	M10	42.00	20	40	20.00
100 MM	IF100-91N	75.00	75.06	164.00	190	M12	50.00	26	50	25.00
125 MM	IF100-91N	75.00	75.06	192.00	218	M12	50.00	26	50	25.00
160 MM	IF160-91N	92.00	92.06	243.00	280	M16	60.00	37	60	30.00
200 MM	IF160-91N	92.00	92.06	293.00	330	M16	60.00	37	60	30.00
250 MM	IF250-91N	140.00	140.06	379.00	432	M20	90.00	53	70	35.00

If the recommended "DG" slot cannot be provided, another means of stopping the Metric Trunnion Assembly from moving with the push/pull forces of the cylinder MUST be utilized. The Metric Trunnion Mounting Assembly should NEVER be rotated 90° from the position in the above drawing, because loosening of the mounting screws will occur as a result of the push/pull cylinder forces.

PENINSULAR® CYLINDER COMPANY

27650 Groesbeck Highway Roseville Michigan 48066-2759 Telephone: 586-775-7211 Fax: 586-775-4545
Toll Free: 800-526-7968 Internet: http://www.peninsularcylinders.com Email: sales@peninsularcylinders.com

TRUNNION PILLOW BLOCK
NAAMS INTERCHANGEABLE

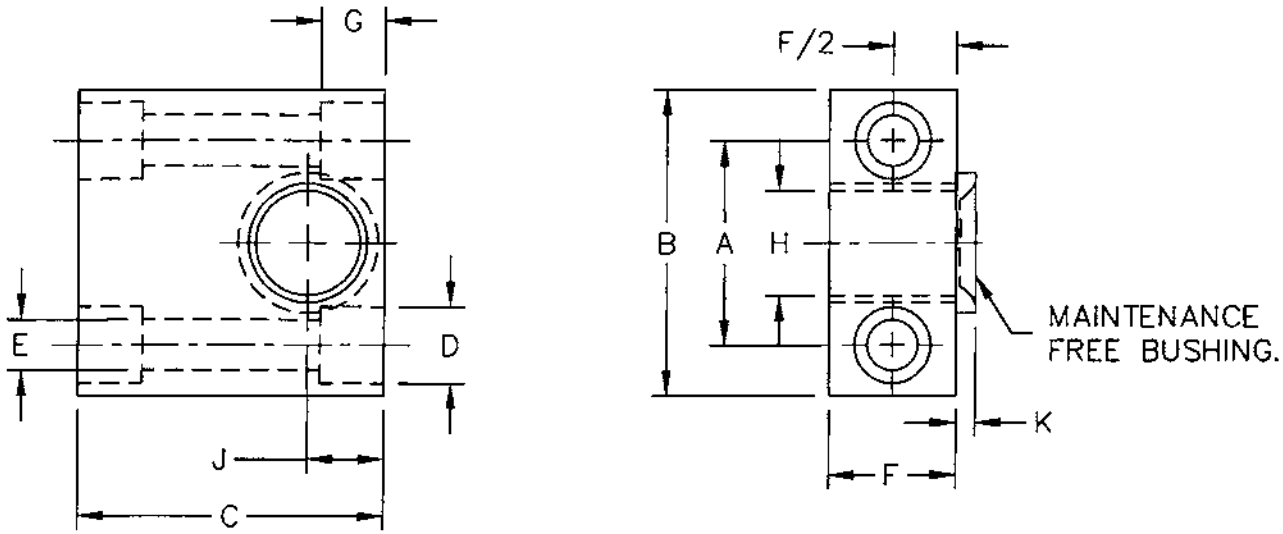

NAAMS CODE	PART NO.	BORE ø	A	B	C	D	E	F	G	H	J	K	SCR SIZE
A621332	IF32-92	32	32	46	45	11	6.6	15	8	12	15	3	M6
A621545	IF40-92	40/50	36	55	54	15	9	18	9	16	18	3	M8
A621668	IF63-92	63/80	42	65	60	18	11	20	11	20	20	3	M10
A622011	IF100-92	100/125	50	75	75	20	14	25	13	25	25	3.5	M12
A622516	IF160-92	160/200	60	92	90	26	18	36	17	32	30	4	M16

PENINSULAR® CYLINDER COMPANY

27650 Groesbeck Highway Roseville Michigan 48066-2759 Telephone: 586-775-7211 Fax: 586-775-4545

TRUNNION PILLOW BLOCK MOUNTING BRACKET
NAAMS INTERCHANGEABLE

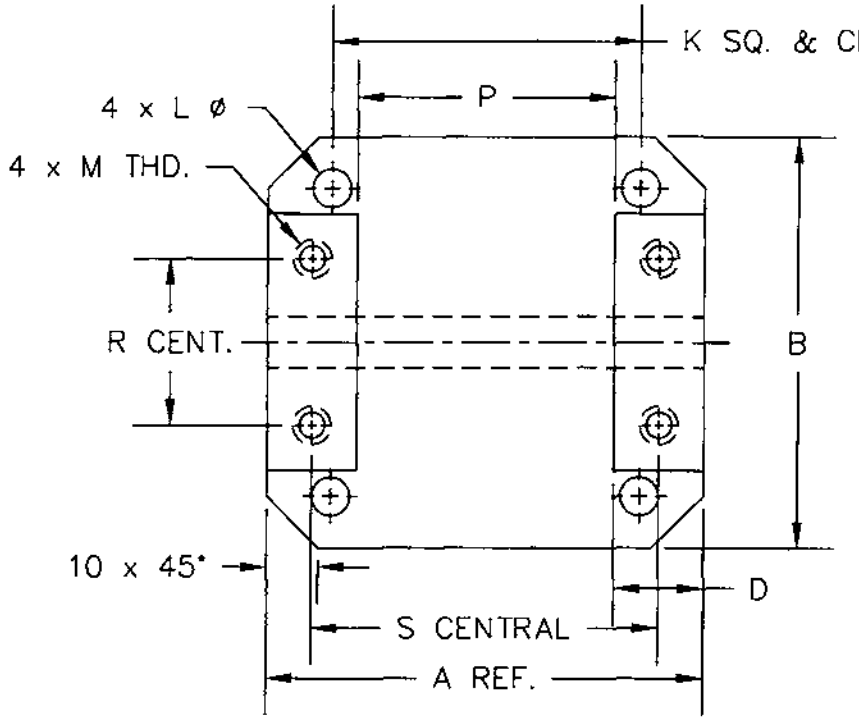

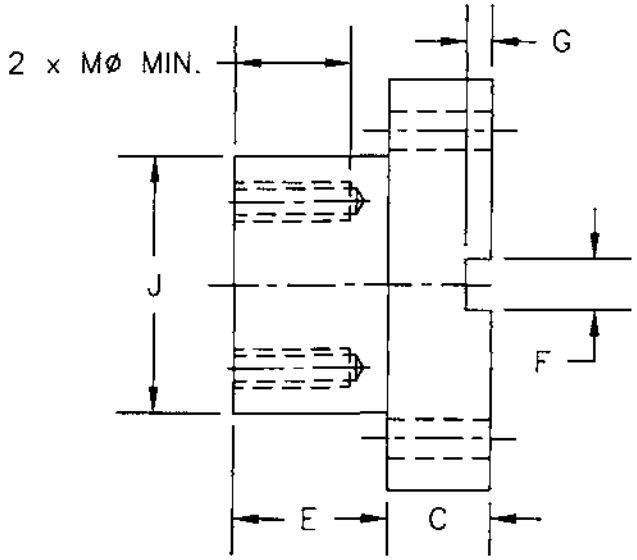

NAAMS CODE	PART NO.	BORE ø	A	B	C	D	E	F	G	J	K	L ø	M THDS.	P	R	S
A650032	IF32-93	32	91	90	20	20	25	12	4	50	71	9	M6 x 1	51	32	71
A650040	IF40-93	40	110	121	20	22	50	12	4	60	87	12	M8 x 1.25	66	36	88
A650050	IF50-93	50	121	110	20	22	50	12	4	60	87	12	M8 x 1.25	77	36	99
A650063	IF63-93	63	140	160	25	24	63	14	4.5	70	116	14	M10 x 1.5	92	42	116
A650080	IF80-93	80	160	140	25	24	63	14	4.5	70	116	14	M10 x 1.6	112	42	136
A650100	IF100-93	100	200	228	30	35	89	14	4.5	90	164	18	M12 x 1.75	130	50	165
A650125	IF125-93	125	228	200	30	35	89	14	4.5	90	164	18	M12 x 1.75	158	50	193
A650160	IF160-93	160	282	332	38	37	120	20	6	100	241	18	M16 x 2	208	60	245
A650200	IF200-93	200	332	282	38	37	120	20	6	100	241	18	M16 x 2	258	60	295

PENINSULAR® CYLINDER COMPANY

27650 Groesbeck Highway Roseville Michigan 48066-2759 Telephone: 586-775-7211 Fax: 586-775-4545
Toll Free: 800-526-7968 Internet: http://www.peninsularcylinders.com Email: sales@peninsularcylinders.com

METRIC ROD CLEVIS PIN

SPARE PART

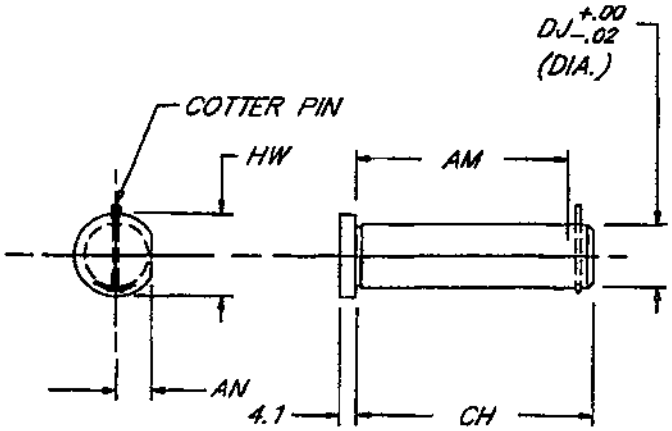

ORDER NO.	AM	AN	CH	DJ	HW	R/E CLEVIS ASM.
IF40-71	44.0	8.6	50.0	12.00	19.0	IF1150-63 IF1150-64
IF50-71	44.0	8.6	52.0	15.00	19.0	IF1200-73
IF100-71	76.0	13.5	70.0	20.00	28.6	IF1400-73
IF160-71	78.0	16.5	84.0	25.00	35.0	IF1400-63 IF1400-64

METRIC PIN BUSHING

SPARE PART

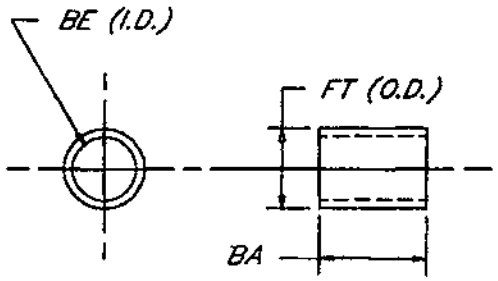

MATERIAL: Nomex/Teflon Composite

ORDER NO.	BA	BE	FT	R/E CLEVIS ASM.
IF40-75	20.00 19.75	12.143 12.093	17.068 17.043	IF1150-63 IF1150-64
IF50-75	20.00 19.75	15.146 15.096	20.071 20.046	IF1200-73
IF100-75	30.00 29.75	20.201 20.121	25.096 25.046	IF1400-73
IF200-75	30.00 29.75	25.205 25.125	30.100 30.050	IF1400-63 IF1400-64

METRIC REAR CLEVIS PIN

SPARE PART

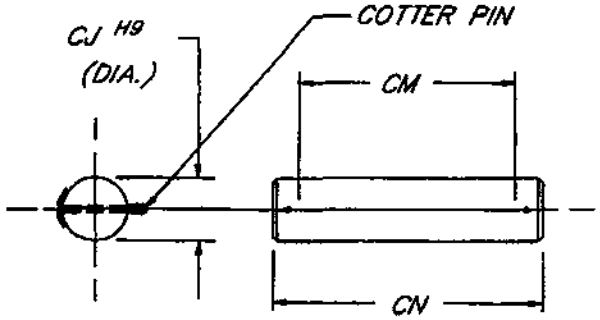

NOTE:
For quality assurance a grease packet is supplied with all Metric Rear Clevis Pins.

ORDER NO.	CJ	CM	CN	ISO REAR CLEVIS CYL.
IF32-66	10.000/9.964	45.0	58.0	IF 3 32
IF40-66	12.000/11.957	52.0	65.0	IF 3 40
IF50-66	12.000/11.957	60.0	75.0	IF 3 50
IF63-66	16.000/15.957	70.0	85.0	IF 3 63
IF80-66	16.000/15.957	90.0	105.0	IF 3 80
IF100-66	20.000/19.948	110.0	125.0	IF 3 100
IF125-66	25.000/24.948	130.0	145.0	IF 3 125
IF160-66	30.000/29.948	170.0	185.0	IF 3 160 IF 3 200
IF250-66	40.000/39.938	200.0	215.0	IF 3 250

PENINSULAR,® INC.
27650 Groesbeck Highway • Roseville, Michigan 48066-2759
Telephone: 586-775-7211 • FAX: 586-775-4545

METRIC COUPLING PLATE

–FOR AIR CYLINDER CAM SLIDE RETURN–

NORTH AMERICAN AUTOMOTIVE METRIC STANDARDS
™NAAMS

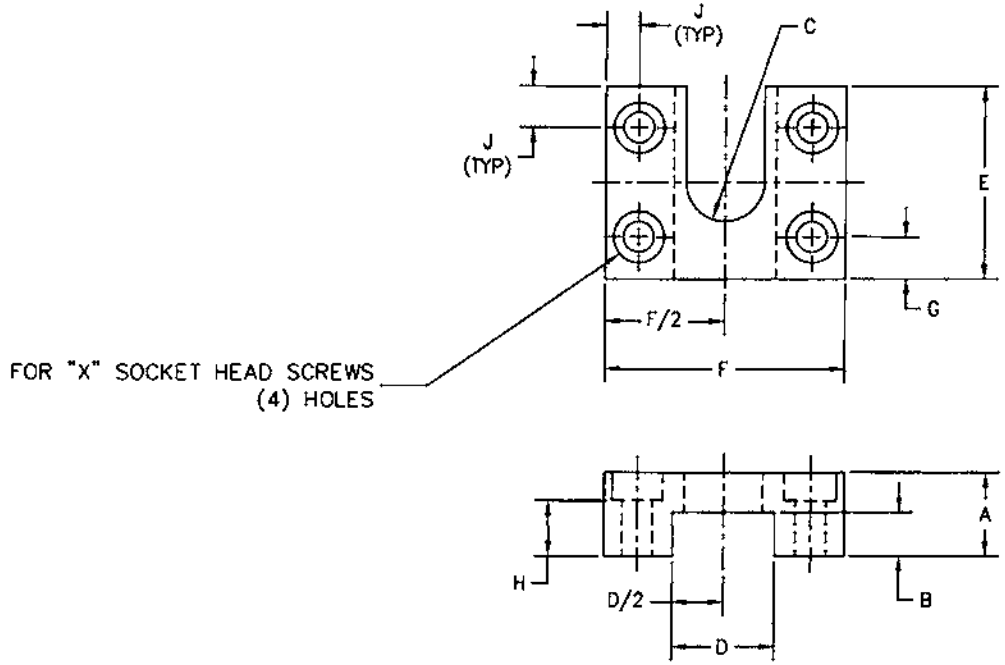

MATERIAL: STEEL

PENINSULAR PART NUMBER	NAAMS CODE	CYLINDER BORE (MM)	A	B	C	D	E	F	G	H	J	X
IF32–80	A710014	32,40	25	11	14	38	50	80	30	15	11.5	M10
IF50–80	A710020	50, 63, 80, 100	32	15	20	50	55	100	35	20	12.5	M12
IF125–80	A710025	125, 160, 200	40	20	25	60	65	120	45	24	16.0	M16
IF250–80	A710033	250	45	20	33	80	100	150	64	19	18.0	M20

METRIC

PENINSULAR® CYLINDER COMPANY

27650 Groesbeck Highway Roseville Michigan 48066–2759 Telephone: 586–775–7211 Fax: 586–775–4545

Toll Free: 800–526–7968 Internet: http://www.peninsularcylinders.com Email: sales@peninsularcylinders.com

METRIC COUPLING PLATE NUT

NORTH AMERICAN AUTOMOTIVE FLUID CONNECTOR STANDARDS
™NAAMS

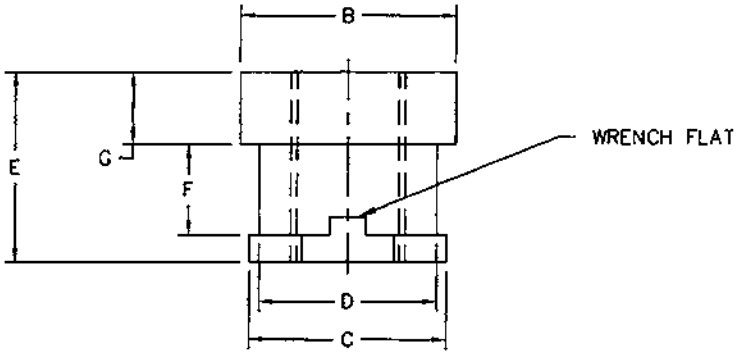

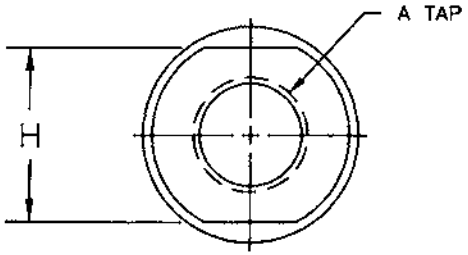

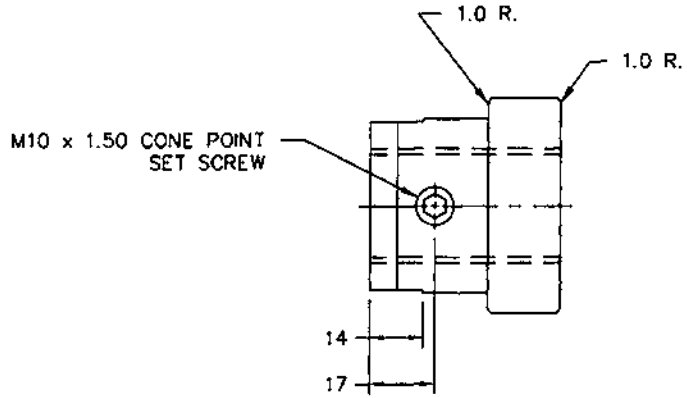

NAAMS CODE COUPLING NUT	CYLINDER BORE	A	B	C	D	E	F	G	H	NAAMS CODE COUPLING PLATE
A721014	32	M10 x 1.25	35	30	25	30	16	10	24	A710014
A721214	40	M12 x 1.25	35	30	25	30	16	10	24	A710014
A721620	50, 63	M16 x 1.50	47	42	37	40	19	14	36	A710020
A722020	80, 100	M20 x 1.50	47	42	37	40	19	14	36	A700020
A722725	125	M27 x 2.00	57	52	47	50	24	19	46	A710025
A723625	160, 200	M36 x 2.00	57	52	47	50	24	19	46	A710025
A724233	250	M42 x 2.00	76	64	59	76	50	19	60	A710033

METRIC

PENINSULAR® CYLINDER COMPANY
27650 Groesbeck Highway Roseville Michigan 48066-2759 Telephone: 586-775-7211 Fax: 586-775-4545
Toll Free: 800-526-7968 Internet: http://www.peninsularcylinders.com Email: sales@peninsularcylinders.com

METRIC ALIGNMENT COUPLER

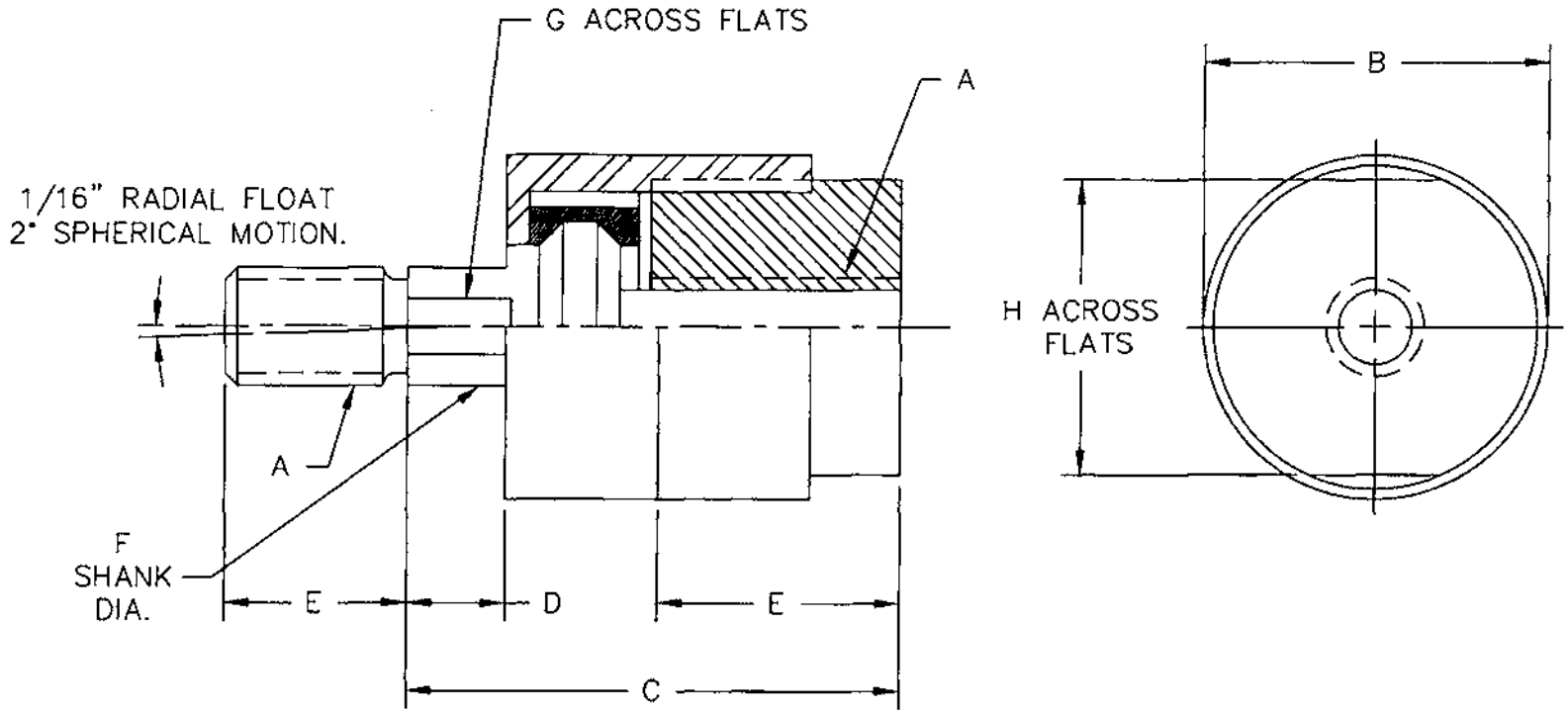

PENINSULAR PART #	A	B	C	D	E	F	G	H	MAX. PULL AT YIELD (kn)
IF100-79	M10 x 1.25	31.7	50.8	12.7	20.0	15.8	14.2	29.0	36
IF120-79	M12 x 1.25	31.7	50.8	12.7	20.0	15.8	14.2	29.0	44
IF140-79	M14 x 1.50	31.7	50.8	12.7	20.0	15.8	14.2	29.0	44
IF160-79	M16 x 1.50	31.7	50.8	12.7	20.0	15.8	14.2	29.0	83
IF200-79	M20 x 1.50	44.4	59.4	8.0	28.5	24.5	22.2	38.1	150
IF270-79	M27 x 2.00	63.5	73.0	11.0	41.0	35.0	32.0	57.0	242
IF360-79	M36 x 2.00	82.5	111.0	20.6	57.0	44.5	38.0	76.0	528

PENINSULAR® CYLINDER COMPANY

27650 Groesbeck Highway Roseville Michigan 48066-2759 Telephone: 586-775-7211 Fax: 586-775-4545
Toll Free: 800-526-7968 Internet: http://www.peninsularcylinders.com Email: sales@peninsularcylinders.com

STANDARD METRIC ROD END CLEVIS

NORTH AMERICAN AUTOMOTIVE METRIC STANDARDS
™NAAMS

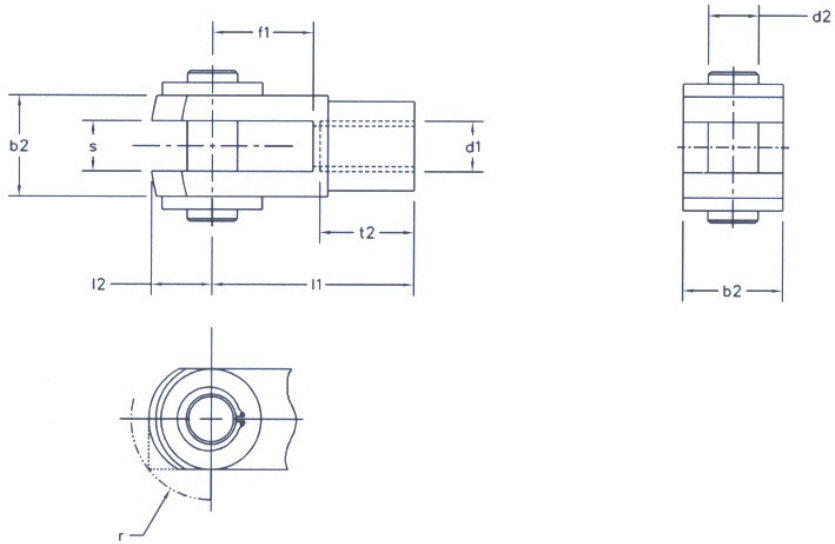

CYL. BORE	ORDER NO.	NAAMS CODE	d1, ROD THD.	d2	MAX b2	l1	l2	S	TOL.	t1	MAX t2	MAX r
32	IF32-77	A660310	M10 X 1.25	10	20	40	12	10	+0.50	20	20	16
40	IF40-77	A660412	M12 X 1.25	12	24	48	14	12	+0.15	24	22	19
50	IF50-77	A660516	M16 X 1.50	16	32	64	19	16		32	28	25
63												
80	IF80-77	A660820	M20 X 1.50	20	40	80	25	20		40	33	32
100												
125	IF125-77	A661227	M27 X 2.00	30	55	110	38	30	+0.60	54	51	45
160	IF160-77	A661336	M36 X 2.00	35	70	144	44	35	+0.16	72	56	57
200												
250	IF250-77	A662542	M42 X 2.00	40	85	168	64	40		84	60	77
320	IF320-77	A663248	M48 X 2.00	50	96	192	73	50		96	65	88

METRIC

PENINSULAR® CYLINDER COMPANY

27650 Groesbeck Highway Roseville Michigan 48066-2759 Telephone: 586-775-7211 Fax: 586-775-4545

Toll Free: 800-526-7968 Internet: http://www.peninsularcylinders.com Email: sales@peninsularcylinders.com

REV. 14 JAN 2003

SECTION 10

METRIC Hydraulic Cylinder Accessories

TABLE OF CONTENTS

TOPIC	METRIC Cylinder Accessories Page Number
ROD-END CLEVIS	
Small Bore	10.00
Large Bore	10.01
ROD EYE	
Small Bore	10.02
Large Bore	10.03
PIVOT PIN	
Small Bore - Plain	10.04
Large Bore - Locking Plate Type	10.05
SPHERICAL ROD EYE	
Small Bore	10.06
Large Bore	10.07
PIVOT PIN FOR SPHERICAL PLAIN BEARING	
Small Bore - Locking Plate Type	10.08
Small Bore - Snap Ring / Cotter Pin Types	10.09
EYE BRACKET	
Small Bore	10.10
Large Bore	10.11
CLEVIS BRACKET	
Small Bore	10.12
Large Bore	10.13
CLEVIS BRACKET FOR SPHERICAL PLAIN BEARING	10.14
LOCKING PLATES	
Small Bore	10.15
Large Bore	10.16

www.peninsularcylinders.com

1-800-526-7968

27650 Groesbeck Highway * Roseville, Michigan 48066-2758

Phone: (586)-775-7211 * Fax: (586) 775-4545 * email: sales@peninsularcylinders.com

ROD END CLEVIS - ASSEMBLY

PENINSULAR® CYLINDER COMPANY

METRIC HIGH PRESSURE HYDRAULIC CYLINDER ACCESSORIES
SMALL BORE SERIES – ISO 6020-2
WORKING PRESSURE – 160 BAR (2320 PSI)
RATED PRESSURE – 250 BAR (3625 PSI)

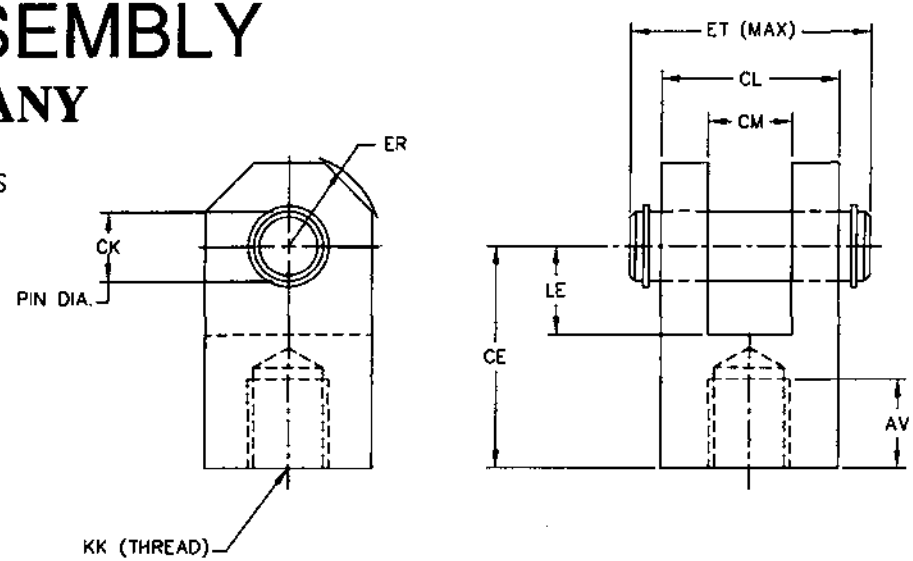

NOTE: ROD END CLEVIS (-86) WILL BE SUPPLIED WITH THE APPROPRIATE ACCESSORIES AS FOLLOWS:
PLAIN PIVOT PIN-COTTER PIN TYPE (-66) -OR-
PLAIN PIVOT PIN-SNAP RING TYPE (-66G)

DIMENSIONS IN MILLIMETERS

ORDER NUMBER	TYPICAL BORE DIAMETER	TYPICAL ROD DIAMETER	TYPICAL ROD END THREAD	NOMINAL FORCE (N)	AV (MIN)	CE JS13	CK H9	CL (MAX)	CM A16	ER (MAX)	ET (MAX)	KK THREAD	LE (MIN)	WEIGHT (KG)
IHP25-86	25	12.0	M10 x 1.25	8 000	14.0	32.0	10.0	26.0	12.0	12.0	37.6	M10 x 1.25	13.0	0.08
IHP32-86	32	14.0	M12 x 1.25	12 500	16.0	36.0	12.0	34.0	16.0	17.0	45.6	M12 x 1.25	19.0	0.25
IHP40-86	40	18.0	M14 X 1.5	20 000	18.0	38.0	14.0	42.0	20.0	17.0	53.4	M14 X 1.5	19.0	0.32
IHP50-86	50	22.0	M16 x 1.5	32 000	22.0	54.0	20.0	62.0	30.0	29.0	75.2	M16 x 1.5	32.0	1.0
IHP63-86	63	28.0	M20 x 1.5	50 000	28.0	60.0	20.0	62.0	30.0	29.0	75.2	M20 x 1.5	32.0	1.1
IHP80-86	80	36.0	M27 x 2	80 000	36.0	75.0	28.0	83.0	40.0	34.0	96.9	M27 x 2	39.0	2.3
IHP100-86	100	45.0	M33 x 2	125 000	45.0	99.0	36.0	103.0	50.0	50.0	120.5	M33 x 2	54.0	2.6
IHP125-86	125	56.0	M42 x 2	200 000	56.0	113.0	45.0	123.0	60.0	53.0	144.0	M42 x 2	57.0	5.5
IHP160-86	160	70.0	M48 x 2	320 000	63.0	126.0	56.0	143.0	70.0	59.0	164.6	M48 x 2	63.0	7.6
IHP200-86	200	90.0	M64 x 3	500 000	85.0	168.0	70.0	163.0	80.0	78.0	187.4	M64 x 3	83.0	13.0

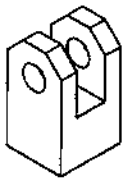

ACCESSORY MOUNTING DIMENSIONS CONFORM TO ISO 8133
ACCESSORIES ARE DESIGNED FOR, BUT NOT LIMITED TO, ISO 6020-2 HYDRAULIC CYLINDERS

27650 Groesbeck Highway Roseville Michigan 48066-2759 Telephone: 586-775-7211 Fax: 586-775-4545
Toll Free: 800-526-7968 Internet: http://www.peninsularcylinders.com Email: sales@peninsularcylinders.com

ROD END CLEVIS - ASSEMBLY

PENINSULAR® CYLINDER COMPANY

METRIC HIGH PRESSURE HYDRAULIC CYLINDER ACCESSORIES
LARGE BORE SERIES – ISO 6020-3
WORKING PRESSURE – 160 BAR (2320 PSI)
RATED PRESSURE – 250 BAR (3625 PSI)

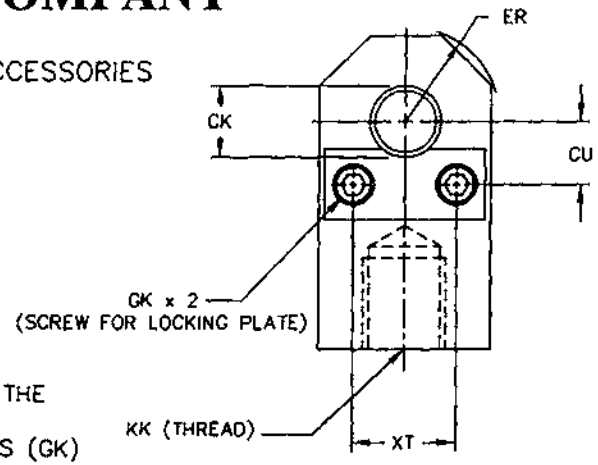

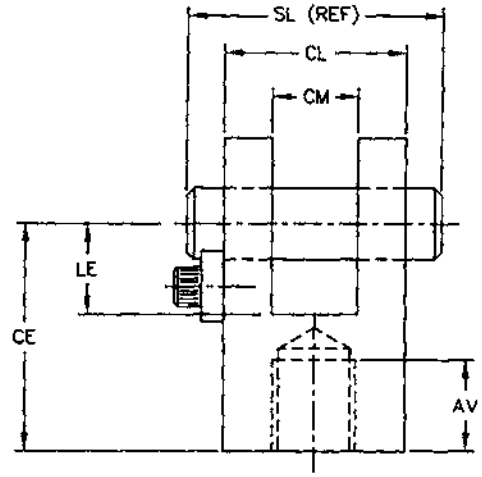

NOTE: ROD END CLEVIS (-86) WILL BE SUPPLIED WITH THE APPROPRIATE ACCESSORIES AS FOLLOWS:
PIVOT PIN (-66L), LOCKING PLATE (-67) & (2) SCREWS (GK)

DIMENSIONS IN MILLIMETERS

ORDER NUMBER	TYPICAL BORE DIAMETER	TYPICAL ROD DIAMETER	TYPICAL ROD END THREAD	NOMINAL FORCE (N)	AV (MIN)	CE JS14	CK H9	CL (MAX)	CM A13	CU JS13	ER (MAX)	GK	KK	LE (MIN)	SL +1.0 -1.0	XT JS13	WEIGHT (KG)
IHP250-86	250	140.0	M100 x 3	800 000	113.0	245.0	90.0	180.0	90.0	56.0	100.0	M12	M100 x 3	115.0	230.0	100.0	–
IHP320-86	320	180.0	M125 x 4	1 250 000	126.0	290.0	110.0	220.0	110.0	66.0	120.0	M12	M125 x 4	130.0	270.0	120.0	–
IHP360-86	360	180.0	M125 x 4	1 600 000	126.0	310.0	125.0	250.0	125.0	72.0	140.0	M14	M125 x 4	150.0	310.0	120.0	–
IHP400-86	400	220.0	M160 x 4	2 000 000	161.0	365.0	140.0	280.0	140.0	77.0	160.0	M14	M160 x 4	165.0	340.0	140.0	–
IHP500-86	500	280.0	M200 x 4	3 200 000	205.0	470.0	180.0	360.0	180.0	92.0	200.0	M16	M200 x 4	210.0	425.0	180.0	–

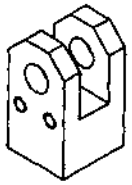

ACCESSORY MOUNTING DIMENSIONS CONFORM TO ISO 13726
ACCESSORIES ARE DESIGNED FOR, BUT NOT LIMITED TO, ISO 6020-3 HYDRAULIC CYLINDERS

27650 Groesbeck Highway Roseville Michigan 48066-2759 Telephone: 586-775-7211 Fax: 586-775-4545
Toll Free: 800-526-7968 Internet: http://www.peninsularcylinders.com Email: sales@peninsularcylinders.com

ROD EYE

PENINSULAR® CYLINDER COMPANY

METRIC HIGH PRESSURE HYDRAULIC CYLINDER ACCESSORIES
SMALL BORE SERIES – ISO 6020–2
WORKING PRESSURE – 160 BAR (2320 PSI)
RATED PRESSURE – 250 BAR (3625 PSI)

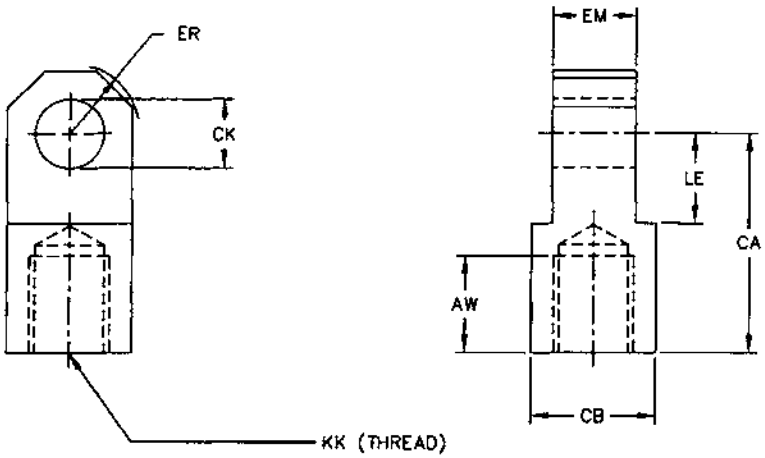

DIMENSIONS IN MILLIMETERS

ORDER NUMBER	TYPICAL BORE DIAMETER	TYPICAL ROD DIAMETER	TYPICAL ROD END THREAD	NOMINAL FORCE (N)	AW (MIN)	CA JS13	CB (MAX)	CK H9	EM H13	ER (MAX)	KK THREAD	LE (MIN)	WEIGHT (KG)
IHP25-65	25	12.0	M10 x 1.25	8 000	14.0	32.0	18.0	10.0	12.0	12.0	M10 x 1.25	13.0	0.08
IHP32-65	32	14.0	M12 x 1.25	12 500	16.0	36.0	22.0	12.0	16.0	17.0	M12 x 1.25	19.0	0.15
IHP40-65	40	18.0	M14 X 1.5	20 000	18.0	38.0	20.0	14.0	20.0	17.0	M14 X 1.5	19.0	0.22
IHP50-65	50	22.0	M16 x 1.5	32 000	22.0	54.0	30.0	20.0	30.0	29.0	M16 x 1.5	32.0	0.5
IHP63-65	63	28.0	M20 x 1.5	50 000	28.0	60.0	30.0	20.0	30.0	29.0	M20 x 1.5	32.0	1.1
IHP80-65	80	36.0	M27 x 2	80 000	36.0	75.0	40.0	28.0	40.0	34.0	M27 x 2	39.0	1.5
IHP100-65	100	45.0	M33 x 2	125 000	45.0	99.0	50.0	36.0	50.0	50.0	M33 x 2	54.0	2.5
IHP125-65	125	56.0	M42 x 2	200 000	56.0	113.0	65.0	45.0	60.0	53.0	M42 x 2	57.0	4.2
IHP160-65	160	70.0	M48 x 2	320 000	63.0	126.0	90.0	56.0	70.0	59.0	M48 x 2	63.0	11.8
IHP200-65	200	90.0	M64 x 3	500 000	85.0	168.0	110.0	70.0	80.0	78.0	M64 x 3	83.0	17.0

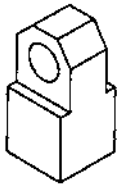

ACCESSORY MOUNTING DIMENSIONS CONFORM TO ISO 8133
ACCESSORIES ARE DESIGNED FOR, BUT NOT LIMITED TO, ISO 6020–2 HYDRAULIC CYLINDERS

27650 Groesbeck Highway Roseville Michigan 48066–2759 Telephone: 586–775–7211 Fax: 586–775–4545
Toll Free: 800–526–7968 Internet: http://www.peninsularcylinders.com Email: sales@peninsularcylinders.com

ROD EYE

PENINSULAR® CYLINDER COMPANY

METRIC HIGH PRESSURE HYDRAULIC CYLINDER ACCESSORIES
LARGE BORE SERIES – ISO 6020–3
WORKING PRESSURE – 160 BAR (2320 PSI)
RATED PRESSURE – 250 BAR (3625 PSI)

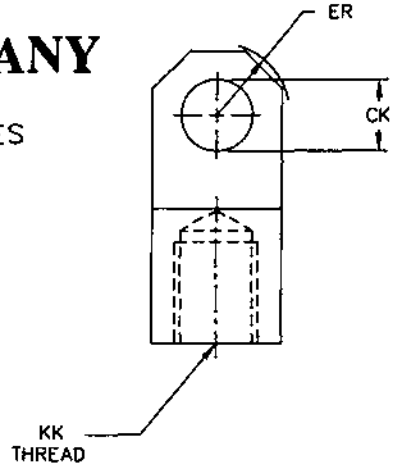

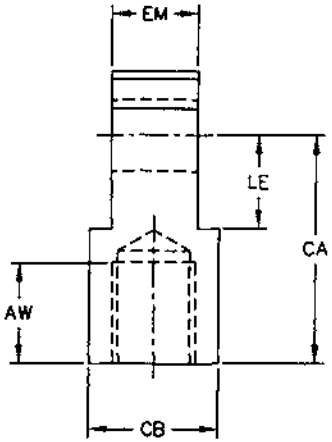

DIMENSIONS IN MILLIMETERS

ORDER NUMBER	TYPICAL BORE DIAMETER	TYPICAL ROD DIAMETER	TYPICAL ROD END THREAD	NOMINAL FORCE (N)	AW (MIN)	CA JS14	CB (MAX)	CK H9	EM H13	ER (MAX)	KK THREAD	LE (MIN)	WEIGHT (KG)
IHP250–65	250	140.0	M100 x 3	800 000	115.0	245.0	180.0	90.0	90.0	100.0	M100 x 3	110.0	–
IHP320–65	320	180.0	M125 x 4	1 250 000	130.0	290.0	220.0	110.0	110.0	120.0	M125 x 4	130.0	–
IHP360–65	360	180.0	M125 x 4	1 600 000	130.0	310.0	250.0	125.0	125.0	140.0	M125 x 4	150.0	–
IHP400–65	400	220.0	M160 x 4	2 000 000	165.0	365.0	280.0	140.0	140.0	160.0	M160 x 4	170.0	–
IHP500–65	500	280.0	M200 x 4	3 200 000	210.0	470.0	360.0	180.0	180.0	200.0	M200 x 4	210.0	–

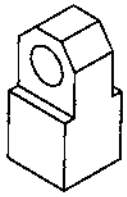

ACCESSORY MOUNTING DIMENSIONS CONFORM TO ISO 13726
ACCESSORIES ARE DESIGNED FOR, BUT NOT LIMITED TO, ISO 6020–3 HYDRAULIC CYLINDERS

27650 Groesbeck Highway Roseville Michigan 48066–2759 Telephone: 586–775–7211 Fax: 586–775–4545
Toll Free: 800–526–7968 Internet: http://www.peninsularcylinders.com Email: sales@peninsularcylinders.com

PIVOT PIN - PLAIN
COTTER PIN OR SNAP RING TYPE

PENINSULAR® CYLINDER COMPANY

METRIC HIGH PRESSURE HYDRAULIC CYLINDER ACCESSORIES
SMALL BORE SERIES – ISO 6020-2
WORKING PRESSURE – 160 BAR (2320 PSI)
RATED PRESSURE – 250 BAR (3625 PSI)

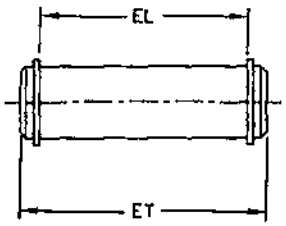

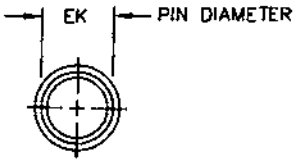

ORDERING EXAMPLE:

PART # IHP10-66 = COTTER PIN TYPE PIVOT PIN
PART # IHP10-66G = SNAP RING TYPE PIVOT PIN

DIMENSIONS IN MILLIMETERS

ORDER NUMBER	TYPICAL BORE DIAMETER	NOMINAL FORCE (N)	EK F8	EL (MIN)	ET (MAX)	WEIGHT (KG)
IHP10-66	25	8 000	10.0	29.0	37.6	0.023
IHP10-66G						
IHP12-66	32	12 500	12.0	37.0	45.6	0.040
IHP12-66G						
IHP14-66	40	20 000	14.0	45.0	53.4	0.061
IHP14-66G						
IHP20-66	50 & 63	50 000	20.0	66.0	75.2	0.182
IHP20-66G						
IHP28-66	80	80 000	28.0	87.0	96.9	0.407
IHP28-66G						
IHP36-66	100	125 000	36.0	107.0	120.5	0.930
IHP36-66G						
IHP45-66	125	200 000	45.0	129.0	144.0	1.635
IHP45-66G						
IHP56-66	160	320 000	56.0	149.0	164.6	3.100
IHP56-66G						
IHP70-66	200	500 000	70.0	169.0	187.4	5.390
IHP70-66G						

ACCESSORY MOUNTING DIMENSIONS CONFORM TO ISO 8133
ACCESSORIES ARE DESIGNED FOR, BUT NOT LIMITED TO, ISO 6020-2 HYDRAULIC CYLINDERS

27650 Groesbeck Highway Roseville Michigan 48066-2759 Telephone: 586-775-7211 Fax: 586-775-4545
Toll Free: 800-526-7968 Internet: http://www.peninsularcylinders.com Email: sales@peninsularcylinders.com

PLAIN PIVOT PIN - LOCKING PLATE TYPE

PENINSULAR® CYLINDER COMPANY

METRIC HIGH PRESSURE HYDRAULIC CYLINDER ACCESSORIES
LARGE BORE SERIES – ISO 6020–3
WORKING PRESSURE – 160 BAR (2320 PSI)
RATED PRESSURE – 250 BAR (3625 PSI)

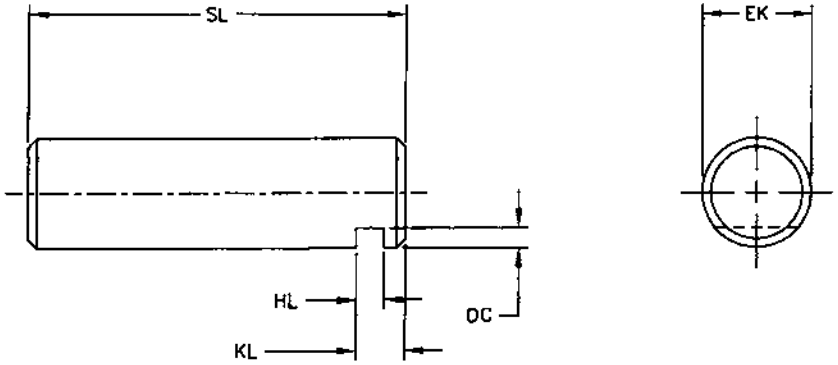

DIMENSIONS IN MILLIMETERS

ORDER NUMBER	TYPICAL BORE DIAMETER	NOMINAL FORCE (N)	DC (MIN)	EK F8	HL +0.3 +0.1	KL +0.0 −1.0	SL +1.0 −1.0	WEIGHT (KG)
IHP250–66L	250	800 000	15.0	90.0	15.0	35.0	230.0	11.48
IHP320–66L	320	1 250 000	15.0	110.0	15.0	35.0	270.0	20.14
IHP360–66L	360	1 600 000	22.5	125.0	18.0	40.0	310.0	29.86
IHP400–66L	400	2 000 000	25.0	140.0	18.0	40.0	340.0	41.08
IHP500–66L	500	3 200 000	30.0	180.0	20.0	45.0	425.0	84.89

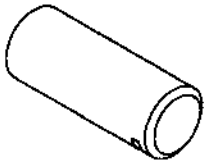

ACCESSORY MOUNTING DIMENSIONS CONFORM TO ISO 13726
ACCESSORIES ARE DESIGNED FOR, BUT NOT LIMITED TO, ISO 6020–3 HYDRAULIC CYLINDERS

27650 Groesbeck Highway Roseville Michigan 48066–2759 Telephone: 586–775–7211 Fax: 586–775–4545
Toll Free: 800–526–7968 Internet: http://www.peninsularcylinders.com Email: sales@peninsularcylinders.com

SPHERICAL ROD EYE

PENINSULAR® CYLINDER COMPANY

METRIC HIGH PRESSURE HYDRAULIC CYLINDER ACCESSORIES
SMALL BORE SERIES – ISO 6020–2
WORKING PRESSURE – 160 BAR (2320 PSI)
RATED PRESSURE – 250 BAR (3625 PSI)

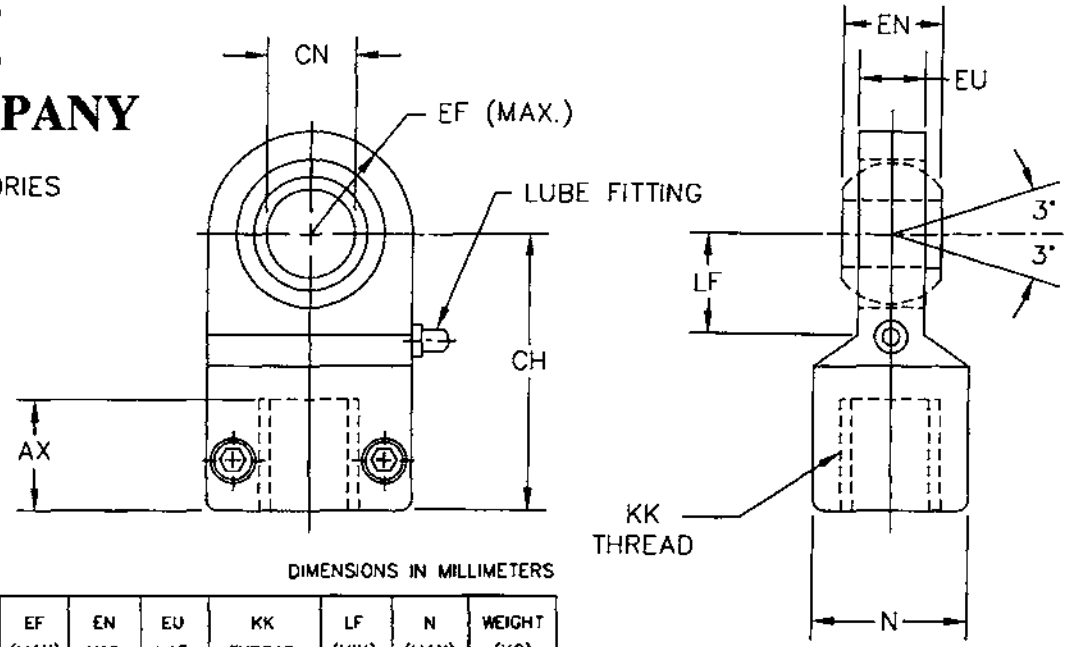

DIMENSIONS IN MILLIMETERS

ORDER NUMBER	TYPICAL BORE DIAMETER	TYPICAL ROD DIAMETER	TYPICAL ROD END THREAD	NOMINAL FORCE (N)	AX (MIN)	CH JS13	CN H7	EF (MAX)	EN H12	EU H13	KK THREAD	LF (MIN)	N (MAX)	WEIGHT (KG)
IHP25–74	25	12.0	M10 x 1.25	8 000	15.0	42.0	12.0	20.0	10.0	8.0	M10 x 1.25	16.0	17.0	0.12
IHP32–74	32	14.0	M12 x 1.25	12 500	17.0	48.0	16.0	22.5	14.0	11.0	M12 x 1.25	20.0	21.0	0.21
IHP40–74	40	18.0	M14 X 1.5	20 000	19.0	58.0	20.0	27.5	16.0	13.0	M14 X 1.5	25.0	25.0	0.38
IHP50–74	50	22.0	M16 x 1.5	32 000	23.0	68.0	25.0	32.5	20.0	17.0	M16 x 1.5	30.0	30.0	0.66
IHP63–74	63	28.0	M20 x 1.5	50 000	29.0	85.0	30.0	40.0	22.0	19.0	M20 x 1.5	35.0	36.0	1.16
IHP80–74	80	36.0	M27 x 2	80 000	37.0	105.0	40.0	50.0	28.0	23.0	M27 x 2	45.0	45.0	2.10
IHP100–74	100	45.0	M33 x 2	125 000	46.0	130.0	50.0	62.5	35.0	30.0	M33 x 2	58.0	55.0	3.85
IHP125–74	125	56.0	M42 x 2	200 000	57.0	150.0	60.0	80.0	44.0	38.0	M42 x 2	68.0	68.0	8.05
IHP160–74	160	70.0	M48 x 2	320 000	64.0	185.0	80.0	102.5	55.0	47.0	M48 x 2	92.0	90.0	19.00
IHP200–74	200	90.0	M64 x 3	500 000	86.0	240.0	100.0	120.0	70.0	57.0	M64 x 3	116.0	110.0	28.00

ACCESSORY MOUNTING DIMENSIONS CONFORM TO ISO 8133
ACCESSORIES ARE DESIGNED FOR, BUT NOT LIMITED TO, ISO 6020–2 HYDRAULIC CYLINDERS

27650 Groesbeck Highway Roseville Michigan 48066–2759 Telephone: 586–775–7211 Fax: 586–775–4545
Toll Free: 800–526–7968 Internet: http://www.peninsularcylinders.com Email: sales@peninsularcylinders.com

SPHERICAL ROD EYE

PENINSULAR® CYLINDER COMPANY

METRIC HIGH PRESSURE HYDRAULIC CYLINDER ACCESSORIES
LARGE BORE SERIES – ISO 6020–3
WORKING PRESSURE – 160 BAR (2320 PSI)
RATED PRESSURE – 250 BAR (3625 PSI)

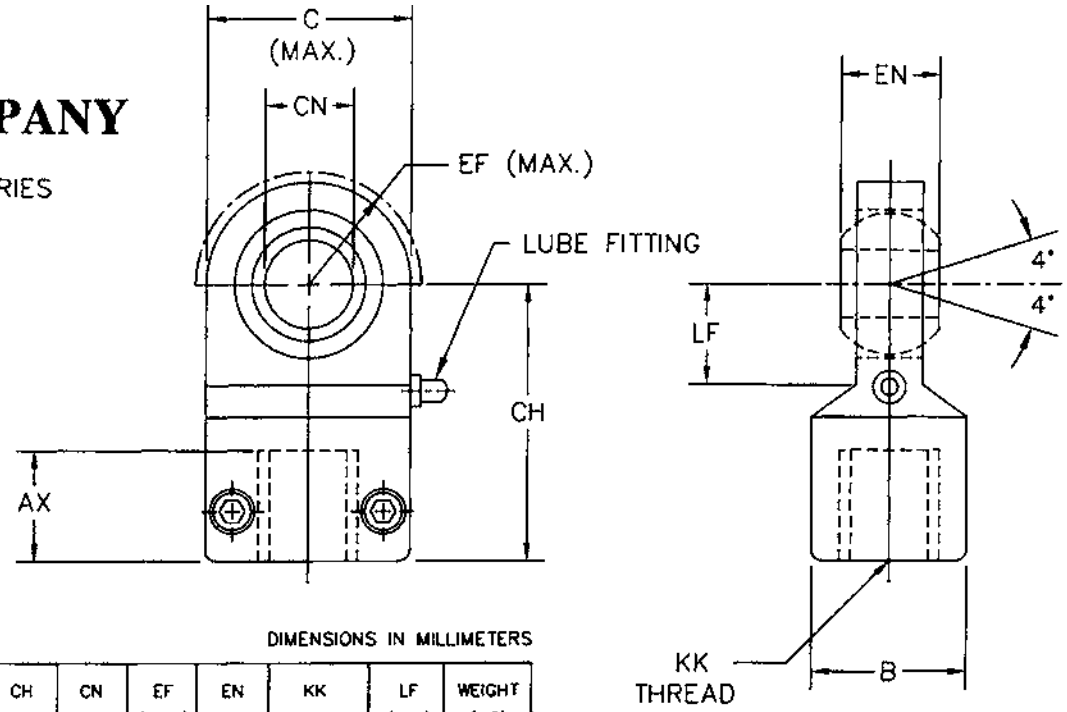

DIMENSIONS IN MILLIMETERS

ORDER NUMBER	TYPICAL BORE DIAMETER	TYPICAL ROD DIAMETER	TYPICAL ROD END THREAD	NOMINAL FORCE (N)	AX (MIN)	B	C (MAX)	CH	CN H7	EF (MAX)	EN H12	KK THREAD	LF (MIN)	WEIGHT (KG)
IHP250–74	250	140.0	M100 x 3	800 000	113.0	135.0	290.0	260.0	125.0	160.0	125.0	M100 x 3	120.0	49.5
IHP320–74	320	180.0	M125 x 4	1 250 000	126.0	165.0	346.0	310.0	160.0	200.0	160.0	M125 x 4	150.0	85.5
IHP360–74	360	220.0	M160 x 4	2 000 000	161.0	215.0	460.0	390.0	200.0	250.0	200.0	M160 x 4	195.0	–
IHP400–74	400	280.0	M200 x 4	3 200 000	205.0	300.0	640.0	530.0	250.0	320.0	250.0	M200 x 4	265.0	–
IHP500–74	500	360.0	M250 x 6	5 000 000	260.0	360.0	750.0	640.0	320.0	375.0	320.0	M250 x 6	325.0	–

ACCESSORY MOUNTING DIMENSIONS CONFORM TO ISO 6982
ACCESSORIES ARE DESIGNED FOR, BUT NOT LIMITED TO, ISO 6020–3 HYDRAULIC CYLINDERS

27650 Groesbeck Highway Roseville Michigan 48066–2759 Telephone: 586–775–7211 Fax: 586–775–4545

REV. 2/09/2010

PIVOT PIN - FOR SPHERICAL PLAIN BEARING LOCKING PLATE TYPE

PENINSULAR® CYLINDER COMPANY

METRIC HIGH PRESSURE HYDRAULIC CYLINDER ACCESSORIES
SMALL BORE SERIES – ISO 6020–2
WORKING PRESSURE – 160 BAR (2320 PSI)
RATED PRESSURE – 250 BAR (3625 PSI)

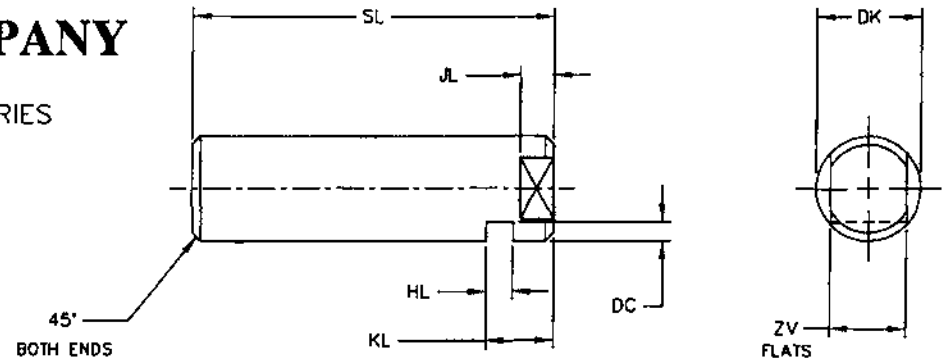

DIMENSIONS IN MILLIMETERS

ORDER NUMBER	TYPICAL BORE DIAMETER	NOMINAL FORCE (N)	DC	DK H6	HL +0.2 −0.0	JL	KL	SL	ZV	ZX	WEIGHT (KG)
IHP12–72PL	25	8 000	4.0	12.0	3.3	4.5	8.0	40.0	10.0	1.0	0.035
IHP16–72PL	32	12 500	4.0	16.0	3.3	5.5	8.0	50.0	13.0	1.0	0.075
IHP20–72PL	40	20 000	5.0	20.0	4.5	5.5	10.0	62.0	17.0	1.5	0.150
IHP25–72PL	50	32 000	5.0	25.0	4.5	5.5	10.0	72.0	22.0	1.5	0.270
IHP30–72PL	63	50 000	6.0	30.0	5.5	7.5	13.0	85.0	24.0	2.0	0.410
IHP40–72PL	80	80 000	7.0	40.0	6.5	9.5	16.0	100.0	32.0	2.0	0.950
IHP50–72PL	100	125 000	8.0	50.0	9.0	10.0	19.0	122.0	41.0	2.0	1.710
IHP60–72PL	125	200 000	9.0	60.0	9.0	11.0	20.0	145.0	50.0	2.0	3.130
IHP80–72PL	160	320 000	11.0	80.0	11.0	15.0	26.0	190.0	70.0	3.0	7.140
IHP100–72PL	200	500 000	14.0	100.0	13.0	15.0	30.0	235.0	90.0	3.0	14.40

ACCESSORY MOUNTING DIMENSIONS CONFORM TO ISO 8133
ACCESSORIES ARE DESIGNED FOR, BUT NOT LIMITED TO, ISO 6020–2 HYDRAULIC CYLINDERS

27650 Groesbeck Highway Roseville Michigan 48066–2759 Telephone: 586–775–7211 Fax: 586–775–4545
Toll Free: 800–526–7968 Internet: http://www.peninsularcylinders.com Email: sales@peninsularcylinders.com

PIVOT PIN - FOR SPHERICAL PLAIN BEARING COTTER PIN OR SNAP RING TYPE

PENINSULAR ® CYLINDER COMPANY

METRIC HIGH PRESSURE HYDRAULIC CYLINDER ACCESSORIES
SMALL BORE SERIES – ISO 6020–2
WORKING PRESSURE – 160 BAR (2320 PSI)
RATED PRESSURE – 250 BAR (3625 PSI)

ORDERING EXAMPLE:

PART # IHP12–72P = COTTER PIN TYPE PIVOT PIN
PART # IHP12–72PG = SNAP RING TYPE PIVOT PIN

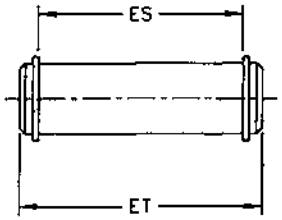

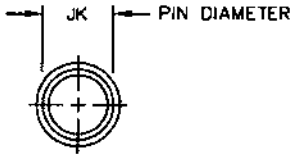

DIMENSIONS IN MILLIMETERS

ORDER NUMBER	TYPICAL BORE DIAMETER	NOMINAL FORCE (N)	JK H6	ES (MIN)	ET (MAX)	WEIGHT (KG)
IHP12–72P IHP12–72PG	25	8 000	12.0	31.0	39.6	0.035
IHP16–72P IHP16–72PG	32	12 500	16.0	41.0	49.6	0.075
IHP20–72P IHP20–72PG	40	20 000	20.0	51.0	60.2	0.145
IHP25–72P IHP25–72PG	50	32 000	25.0	61.0	70.2	0.260
IHP30–72P IHP30–72PG	63	50 000	30.0	71.0	80.8	0.380
IHP40–72P IHP40–72PG	80	80 000	40.0	81.0	94.5	0.895
IHP50–72P IHP50–72PG	100	125 000	50.0	101.0	116.5	1.630
IHP60–72P IHP60–72PG	125	200 000	60.0	121.0	136.6	2.950
IHP80–72P IHP80–72PG	160	320 000	80.0	161.0	179.2	6.730
IHP100–72P IHP100–72PG	200	500 000	100.0	201.0	220.4	13.50

ACCESSORY MOUNTING DIMENSIONS CONFORM TO ISO 8133
ACCESSORIES ARE DESIGNED FOR, BUT NOT LIMITED TO, ISO 6020–2 HYDRAULIC CYLINDERS

27650 Groesbeck Highway Roseville Michigan 48066–2759 Telephone: 586–775–7211 Fax: 586–775–4545
Toll Free: 800–526–7968 Internet: http://www.peninsularcylinders.com Email: sales@peninsularcylinders.com

EYE BRACKET

PENINSULAR® CYLINDER COMPANY

METRIC HIGH PRESSURE HYDRAULIC CYLINDER ACCESSORIES
SMALL BORE SERIES – ISO 6020–2
WORKING PRESSURE – 160 BAR (2320 PSI)
RATED PRESSURE – 250 BAR (3625 PSI)

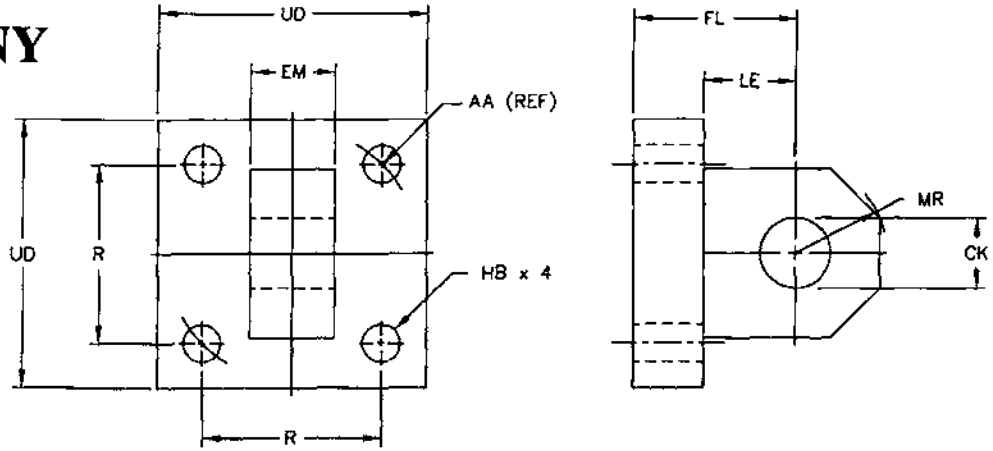

DIMENSIONS IN MILLIMETERS

ORDER NUMBER	TYPICAL BORE DIAMETER	TYPICAL PIN DIAMETER	NOMINAL FORCE (N)	AA (REF)	CK H9	EM H13	FL JS14	HB H13	LE (MIN)	MR (MAX)	R JS14	UD (MAX)	WEIGHT (KG)
IHP25–76	25	10.0	8 000	40.0	10.0	12.0	23.0	5.5	13.0	12.0	28.3	40.0	0.30
IHP32–76	32	12.0	12 500	47.0	12.0	16.0	29.0	6.6	19.0	17.0	33.2	45.0	0.45
IHP40–76	40	14.0	20 000	59.0	14.0	20.0	29.0	9.0	19.0	17.0	41.7	63.0	0.90
IHP50–76	50	20.0	32 000	74.0	20.0	30.0	48.0	13.5	32.0	29.0	52.3	75.0	1.30
IHP63–76	63	20.0	50 000	91.0	20.0	30.0	48.0	13.5	32.0	29.0	64.3	90.0	1.90
IHP80–76	80	28.0	80 000	117.0	28.0	40.0	59.0	17.5	39.0	34.0	82.7	115.0	4.00
IHP100–76	100	36.0	125 000	137.0	36.0	50.0	79.0	17.5	54.0	50.0	96.9	130.0	6.25
IHP125–76	125	45.0	200 000	178.0	45.0	60.0	87.0	24.0	57.0	53.0	125.9	165.0	11.40
IHP160–76	160	56.0	320 000	219.0	56.0	70.0	103.0	30.0	63.0	59.0	154.9	205.0	20.80
IHP200–76	200	70.0	500 000	269.0	70.0	80.0	132.0	33.0	82.0	78.0	190.2	245.0	38.80

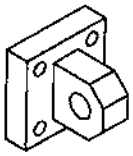

ACCESSORY MOUNTING DIMENSIONS CONFORM TO ISO 8133
ACCESSORIES ARE DESIGNED FOR, BUT NOT LIMITED TO, ISO 6020–2 HYDRAULIC CYLINDERS

27650 Groesbeck Highway Roseville Michigan 48066–2759 Telephone: 586–775–7211 Fax: 586–775–4545
Toll Free: 800–526–7968 Internet: http://www.peninsularcylinders.com Email: sales@peninsularcylinders.com

EYE BRACKET

PENINSULAR® CYLINDER COMPANY

METRIC HIGH PRESSURE HYDRAULIC CYLINDER ACCESSORIES
LARGE BORE SERIES – ISO 6020-3
WORKING PRESSURE – 160 BAR (2320 PSI)
RATED PRESSURE – 250 BAR (3625 PSI)

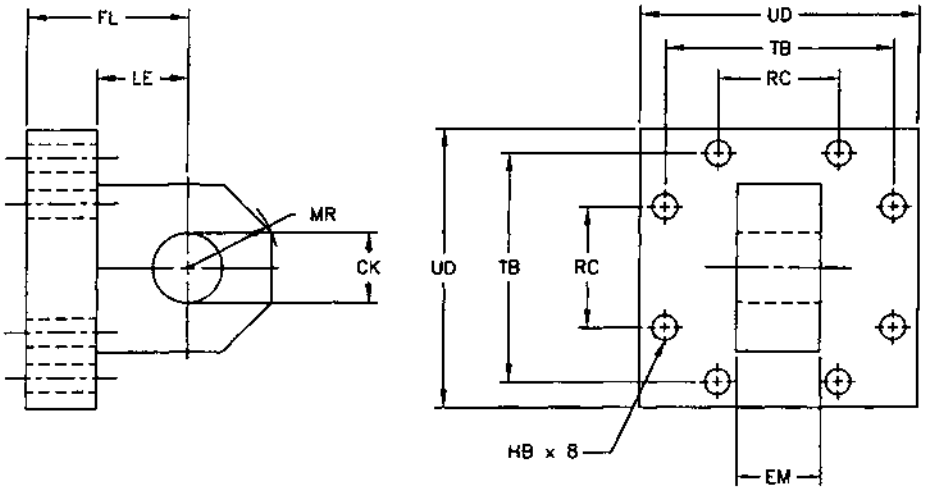

DIMENSIONS IN MILLIMETERS

ORDER NUMBER	TYPICAL BORE DIAMETER	TYPICAL PIN DIAMETER	NOMINAL FORCE (N)	CK H9	EM H13	FL JS14	HB H13	LE (MIN)	MR (MAX)	RC JS14	TB JS14	UD
IHP250-76	250	90.0	800 000	90.0	90.0	170.0	30.0	125.0	100.0	155.0	260.0	320.0
IHP320-76	320	110.0	1 250 000	110.0	110.0	200.0	36.0	150.0	120.0	186.0	320.0	400.0
IHP360-76	360	125.0	1 600 000	125.0	125.0	235.0	39.0	175.0	140.0	221.5	365.0	450.0
IHP400-76	400	140.0	2 000 000	140.0	140.0	265.0	45.0	195.0	160.0	252.5	410.0	500.0
IHP500-76	500	180.0	3 200 000	180.0	180.0	325.0	56.0	250.0	200.0	316.0	515.0	630.0

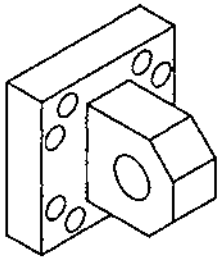

EYE BRACKET ACCESSORY MOUNTING DIMENSIONS ARE NOT CURRENTLY DEFINED IN ISO 13726
ACCESSORIES ARE DESIGNED FOR, BUT NOT LIMITED TO, ISO 6020-3 HYDRAULIC CYLINDERS

27650 Groesbeck Highway Roseville Michigan 48066-2759 Telephone: 586-775-7211 Fax: 586-775-4545
Toll Free: 800-526-7968 Internet: http://www.peninsularcylinders.com Email: sales@peninsularcylinders.com

CLEVIS BRACKET

PENINSULAR® CYLINDER COMPANY

METRIC HIGH PRESSURE HYDRAULIC CYLINDER ACCESSORIES
SMALL BORE SERIES – ISO 6020–2
WORKING PRESSURE – 160 BAR (2320 PSI)
RATED PRESSURE – 250 BAR (3625 PSI)

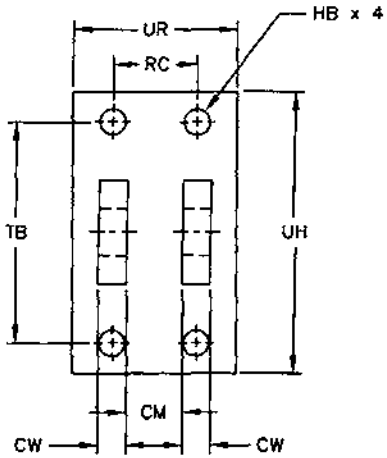

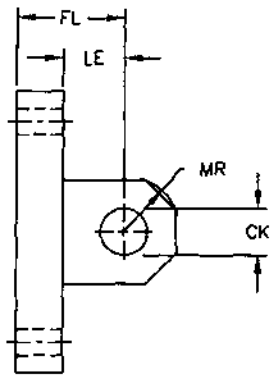

DIMENSIONS IN MILLIMETERS

ORDER NUMBER	TYPICAL BORE DIAMETER	TYPICAL PIN DIAMETER	NOMINAL FORCE (N)	CK H9	CM A16	CW	FL JS14	HB H13	LE (MIN)	MR (MAX)	RC JS14	TB JS14	UH	UR	WEIGHT (KG)
IHP25–78	25	10.0	8 000	10.0	12.0	6.0	23.0	5.5	13.0	12.0	18.0	47.0	60.0	35.0	0.4
IHP32–78	32	12.0	12 500	12.0	16.0	8.0	29.0	6.6	19.0	17.0	24.0	57.0	70.0	45.0	0.8
IHP40–78	40	14.0	20 000	14.0	20.0	10.0	29.0	9.0	19.0	17.0	30.0	68.0	85.0	55.0	1.0
IHP50–78	50	20.0	32 000	20.0	30.0	15.0	48.0	13.5	32.0	29.0	45.0	102.0	125.0	80.0	2.5
IHP63–78	63	20.0	50 000	20.0	30.0	15.0	48.0	13.5	32.0	29.0	45.0	102.0	125.0	80.0	2.5
IHP80–78	80	28.0	80 000	28.0	40.0	20.0	59.0	17.5	39.0	34.0	60.0	135.0	170.0	100.0	5.0
IHP100–78	100	36.0	125 000	36.0	50.0	25.0	79.0	17.5	54.0	50.0	75.0	167.0	200.0	130.0	9.0
IHP125–78	125	45.0	200 000	45.0	60.0	30.0	87.0	24.0	57.0	53.0	90.0	203.0	250.0	150.0	20.0
IHP160–78	160	56.0	320 000	56.0	70.0	35.0	103.0	30.0	63.0	59.0	105.0	242.0	300.0	180.0	31.0
IHP200–78	200	70.0	500 000	70.0	80.0	40.0	132.0	33.0	82.0	78.0	120.0	300.0	360.0	200.0	41.0

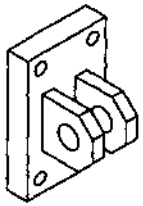

ACCESSORY MOUNTING DIMENSIONS CONFORM TO ISO 8133
ACCESSORIES ARE DESIGNED FOR, BUT NOT LIMITED TO, ISO 6020–2 HYDRAULIC CYLINDERS

27650 Groesbeck Highway Roseville Michigan 48066–2759 Telephone: 586–775–7211 Fax: 586–775–4545
Toll Free: 800–526–7968 Internet: http://www.peninsularcylinders.com Email: sales@peninsularcylinders.com

CLEVIS BRACKET

PENINSULAR® CYLINDER COMPANY

METRIC HIGH PRESSURE HYDRAULIC CYLINDER ACCESSORIES
LARGE BORE SERIES – ISO 6020-3
WORKING PRESSURE – 160 BAR (2320 PSI)
RATED PRESSURE – 250 BAR (3625 PSI)

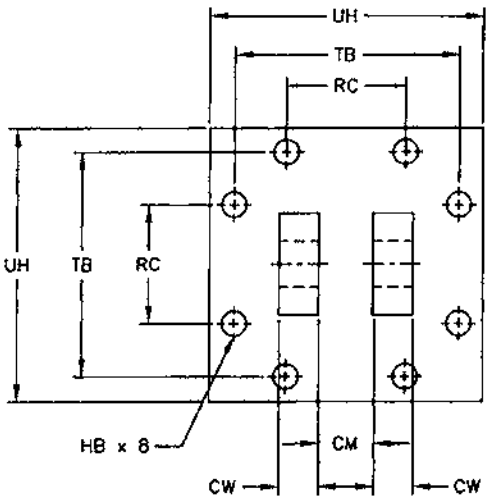

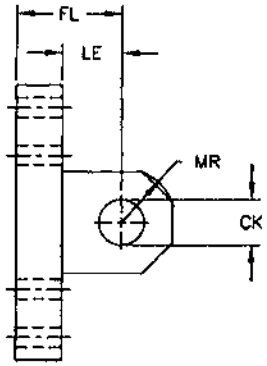

DIMENSIONS IN MILLIMETERS

ORDER NUMBER	TYPICAL BORE DIAMETER	TYPICAL PIN DIAMETER	NOMINAL FORCE (N)	CK H9	CM A16	CW	FL JS14	HB H13	LE (MIN)	MR (MAX)	RC JS14	TB JS14	UH
IHP250-78	250	90.0	800 000	90.0	90.0	45.0	170.0	30.0	125.0	100.0	155.0	260.0	320.0
IHP320-78	320	110.0	1 250 000	110.0	110.0	55.0	200.0	36.0	150.0	120.0	186.0	320.0	400.0
IHP360-78	360	125.0	1 600 000	125.0	125.0	62.5	235.0	39.0	175.0	140.0	221.5	365.0	450.0
IHP400-78	400	140.0	2 000 000	140.0	140.0	70.0	265.0	45.0	195.0	160.0	252.5	410.0	500.0
IHP500-78	500	180.0	3 200 000	180.0	180.0	90.0	325.0	56.0	250.0	200.0	316.0	515.0	630.0

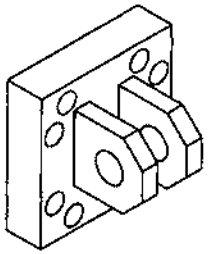

CLEVIS BRACKET ACCESSORY MOUNTING DIMENSIONS ARE NOT CURRENTLY DEFINED IN ISO 13726
ACCESSORIES ARE DESIGNED FOR, BUT NOT LIMITED TO, ISO 6020-3 HYDRAULIC CYLINDERS

27650 Groesbeck Highway Roseville Michigan 48066-2759 Telephone: 586-775-7211 Fax: 586-775-4545
Toll Free: 800-526-7968 Internet: http://www.peninsularcylinders.com Email: sales@peninsularcylinders.com

CLEVIS BRACKET
FOR SPHERICAL PLAIN BEARING

PENINSULAR® CYLINDER COMPANY

METRIC HIGH PRESSURE HYDRAULIC CYLINDER ACCESSORIES
SMALL BORE SERIES – ISO 6020–2
WORKING PRESSURE – 160 BAR (2320 PSI)
RATED PRESSURE – 250 BAR (3625 PSI)

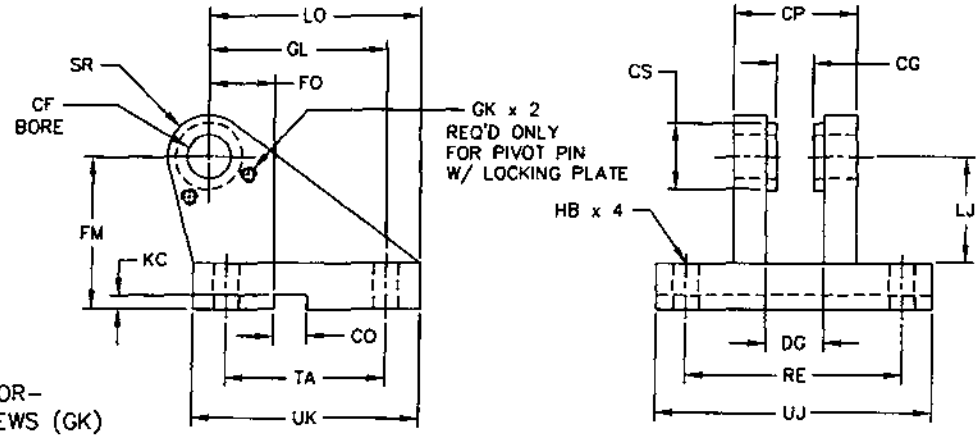

NOTE: CLEVIS BRACKET (–72) WILL BE SUPPLIED WITH
THE APPROPRIATE ACCESSORIES AS FOLLOWS:
PIVOT PIN–COTTER PIN TYPE (–72P), PIVOT PIN–SNAP RING TYPE (–72PG), –OR–
PIVOT PIN–LOCKING PLATE TYPE (–72PL) & LOCKING PLATE (–67) & (2) SCREWS (GK)

DIMENSIONS IN MILLIMETERS

ORDER NUMBER	TYPICAL BORE DIAMETER	TYPICAL PIN DIAMETER	NOMINAL FORCE (N)	CF K7	CG +3.0 +1.0	CO N9	CP H14	CS (MAX)	DG +2.0 –0.0	FO JS14	FM JS11	GK	GL JS13	HB	KC +0.3 –0.0	LJ	LO	RE JS13	SR (MAX)	TA JS13	UJ	UK	WEIGHT (KG)
IHP25–72	25	12.0	8 000	12.0	10.0	10.0	30.0	16.0	12.0	16.0	40.0	M6	46.0	9.0	3.3	29.0	56.0	55.0	12.0	40.0	75.0	60.0	0.52
IHP32–72	32	16.0	12 500	16.0	14.0	16.0	40.0	22.0	16.0	18.0	50.0	M6	61.0	11.0	4.3	38.0	74.0	70.0	16.0	55.0	95.0	80.0	1.05
IHP40–72	40	20.0	20 000	20.0	16.0	16.0	50.0	25.0	19.0	20.0	55.0	M6	64.0	14.0	4.3	40.0	80.0	85.0	20.0	58.0	120.0	90.0	1.72
IHP50–72	50	25.0	32 000	25.0	20.0	25.0	60.0	30.0	24.0	22.0	65.0	M6	78.0	16.0	5.4	49.0	98.0	100.0	25.0	70.0	140.0	110.0	2.72
IHP63–72	63	30.0	50 000	30.0	22.0	25.0	70.0	35.0	26.0	24.0	85.0	M6	97.0	18.0	5.4	63.0	120.0	115.0	30.0	90.0	160.0	135.0	5.15
IHP80–72	80	40.0	80 000	40.0	28.0	36.0	80.0	47.0	32.0	24.0	100.0	M8	123.0	22.0	8.4	73.0	148.0	135.0	40.0	120.0	190.0	170.0	9.30
IHP100–72	100	50.0	125 000	50.0	35.0	36.0	100.0	58.0	41.0	35.0	125.0	M8	155.0	30.0	8.4	92.0	190.0	170.0	50.0	145.0	240.0	215.0	18.3
IHP125–72	125	60.0	200 000	60.0	44.0	50.0	120.0	68.0	50.0	35.0	150.0	M10	187.0	39.0	11.4	110.0	225.0	200.0	60.0	185.0	270.0	260.0	35.0
IHP160–72	160	80.0	320 000	80.0	55.0	50.0	160.0	90.0	65.0	35.0	190.0	M10	255.0	45.0	11.4	142.0	295.0	240.0	80.0	260.0	320.0	340.0	63.0
IHP200–72	200	100.0	500 000	100.0	70.0	63.0	200.0	111.0	80.0	35.0	210.0	M10	285.0	48.0	12.4	152.0	335.0	300.0	100.0	300.0	400.0	400.0	109.0

ACCESSORY MOUNTING DIMENSIONS CONFORM TO ISO 8133
ACCESSORIES ARE DESIGNED FOR, BUT NOT LIMITED TO, ISO 6020–2 HYDRAULIC CYLINDERS

27650 Groesbeck Highway Roseville Michigan 48066–2759 Telephone: 586–775–7211 Fax: 586–775–4545
Toll Free: 800–526–7968 Internet: http://www.peninsularcylinders.com Email: sales@peninsularcylinders.com

LOCKING PLATE FOR PIVOT PIN

PENINSULAR® CYLINDER COMPANY

METRIC HIGH PRESSURE HYDRAULIC CYLINDER ACCESSORIES
SMALL BORE SERIES – ISO 6020–2
WORKING PRESSURE – 160 BAR (2320 PSI)
RATED PRESSURE – 250 BAR (3625 PSI)

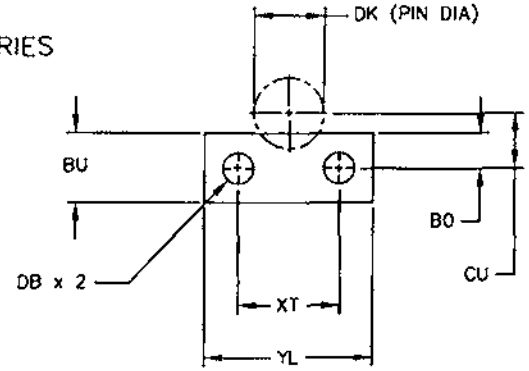

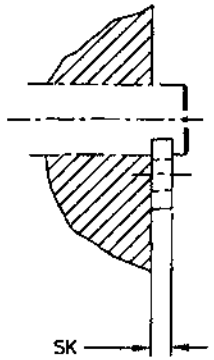

LOCKING PLATE (–67) SUPPLIED WITH (2) RETAINING SCREWS

DIMENSIONS IN MILLIMETERS

ORDER NUMBER	TYPICAL BORE DIAMETER	TYPICAL PIN DIAMETER	NOMINAL FORCE (N)	BO	BU	CU JS13	DB H13	DK	SK	YL	XT JS13	SCREW (CLASS 8.8) 2 REQ'D	WEIGHT (KG)
IHP25–67	25	12.0	8 000	7.5	15.0	9.5	6.4	12.0	3.0	27.0	16.0	M6 x 12	0.015
IHP32–67	32	16.0	12 500	7.5	15.0	11.5	6.4	16.0	3.0	40.0	25.0	M6 x 12	0.020
IHP40–67	40	20.0	20 000	9.0	18.0	14.5	6.4	20.0	4.0	40.0	25.0	M6 x 15	0.032
IHP50–67	50	25.0	32 000	9.0	18.0	16.5	6.4	25.0	4.0	40.0	25.0	M6 x 15	0.032
IHP63–67	63	30.0	50 000	10.0	20.0	19.0	6.4	30.0	5.0	45.0	30.0	M6 x 15	0.050
IHP80–67	80	40.0	80 000	10.0	20.0	23.0	8.4	40.0	6.0	62.0	42.0	M8 x 20	0.078
IHP100–67	100	50.0	125 000	12.5	25.0	29.5	8.4	50.0	8.0	65.0	45.0	M8 x 20	0.090
IHP125–67	125	60.0	200 000	12.5	25.0	33.5	10.5	60.0	8.0	80.0	55.0	M10 x 25	0.170
IHP160–67	160	80.0	320 000	15.0	30.0	44.0	10.5	80.0	10.0	90.0	60.0	M10 x 25	0.250
IHP200–67	200	100.0	500 000	20.0	40.0	56.0	10.5	100.0	12.0	120.0	90.0	M10 x 25	0.490

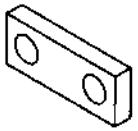

ACCESSORY MOUNTING DIMENSIONS CONFORM TO ISO 8133
ACCESSORIES ARE DESIGNED FOR, BUT NOT LIMITED TO, ISO 6020–2 HYDRAULIC CYLINDERS

27650 Groesbeck Highway Roseville Michigan 48066–2759 Telephone: 586–775–7211 Fax: 586–775–4545
Toll Free: 800–526–7968 Internet: http://www.peninsularcylinders.com Email: sales@peninsularcylinders.com

LOCKING PLATE FOR PLAIN PIVOT PIN

PENINSULAR® CYLINDER COMPANY

METRIC HIGH PRESSURE HYDRAULIC CYLINDER ACCESSORIES
LARGE BORE SERIES – ISO 6020–3
WORKING PRESSURE – 160 BAR (2320 PSI)
RATED PRESSURE – 250 BAR (3625 PSI)

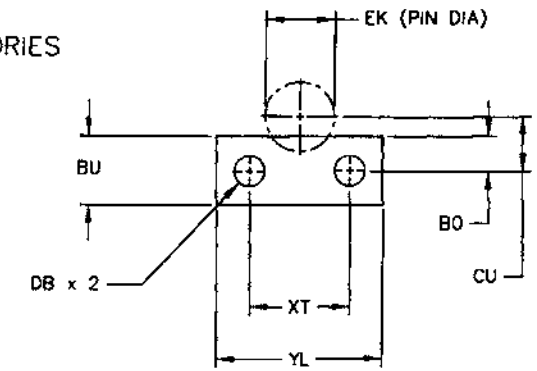

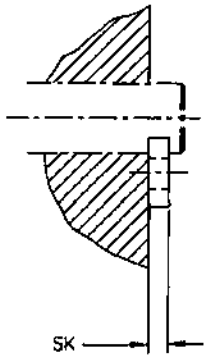

LOCKING PLATE (–67) SUPPLIED WITH (2) RETAINING SCREWS

DIMENSIONS IN MILLIMETERS

ORDER NUMBER	TYPICAL BORE DIAMETER	TYPICAL PIN DIAMETER	NOMINAL FORCE (N)	BO JS14	BU (MAX)	CU JS13	DB H13	EK (REF)	SK +0.0 –0.2	YL (MIN)	XT JS13	SOCKET HEAD CAP SCREW (CLASS 8.8) 2 REQ'D	WEIGHT (KG)
IHP250–67	250	90.0	800 000	25.0	50.0	56.0	13.5	90.0	15.0	130.0	100.0	M12–1.75x35	0.76
IHP320–67	320	110.0	1 250 000	25.0	50.0	66.0	13.5	110.0	15.0	150.0	120.0	M12–1.75x35	0.88
IHP360–67	360	125.0	1 600 000	30.0	60.0	72.0	15.5	125.0	18.0	155.0	120.0	M14–2.0x40	1.31
IHP400–67	400	140.0	2 000 000	30.0	60.0	77.0	15.5	140.0	18.0	170.0	140.0	M14–2.0x40	1.44
IHP500–67	500	180.0	3 200 000	30.0	60.0	92.0	17.5	180.0	20.0	215.0	180.0	M16–2.0x45	2.02

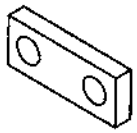

ACCESSORY MOUNTING DIMENSIONS CONFORM TO ISO 13726
ACCESSORIES ARE DESIGNED FOR, BUT NOT LIMITED TO, ISO 6020–3 HYDRAULIC CYLINDERS

27650 Groesbeck Highway Roseville Michigan 48066–2759 Telephone: 586–775–7211 Fax: 586–775–4545
Toll Free: 800–526–7968 Internet: http://www.peninsularcylinders.com Email: sales@peninsularcylinders.com

SECTION 11

Die Lifter Units and Slides

TABLE OF CONTENTS

TOPIC	Page Number
How to Order M-1425 and M-1426	11.00
M-1425	11.01
M-1426	11.02
How to Order M-1541 and M-1542	11.03
M-1541 A & B	11.04
M-1542 A & B	11.05
SEF 1010	11.06
SEF 1015	11.07

www.peninsularcylinders.com

1-800-526-7968

27650 Groesbeck Highway * Roseville, Michigan 49066-2759

Phone: (596)-775-7211 * Fax: (596) 775-4545 * email: sales@peninsularcylinders.com

HOW TO ORDER M-1425 and M-1426 LIFTER UNITS

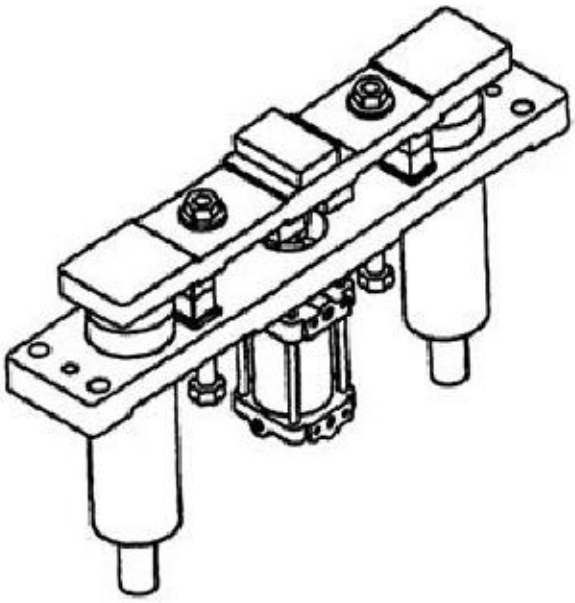

M-1425 (2 1/2 " bore)

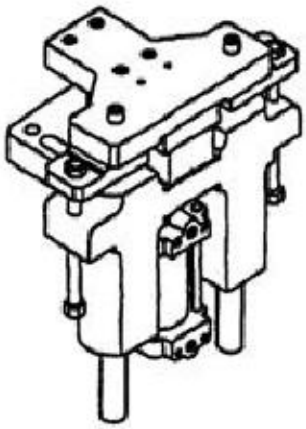

M-1426 (2 " bore)

To order a Lifter Unit specify **M-1425** or **M-1426**
add a dash - and the stroke required in inches

EXAMPLES:

M-1425-7 (a larger Lifter Unit with a 7" stroke)

M-1426-4 (a smaller Lifter Unit with a 4" stroke)

The initial stroke lengths conform with GM specifications and include the following stroke lengths:

M-1425- 1 inch thru 8 inch
M-1426- 1 inch thru 6 inch

Call your Peninsular representative for details of additional stroke lengths or larger bore cylinder for Lifter Unit M-1425. The M-1426 Lifter Unit will often interchange with the M-1363 Lifter Unit.

PENINSULAR,® INC. 27650 Groesbeck Hwy. Roseville, MI 48066-2759 586/775-7211 FAX: 586/775-4545

PARTS LIST - LIFTER UNIT M-1425

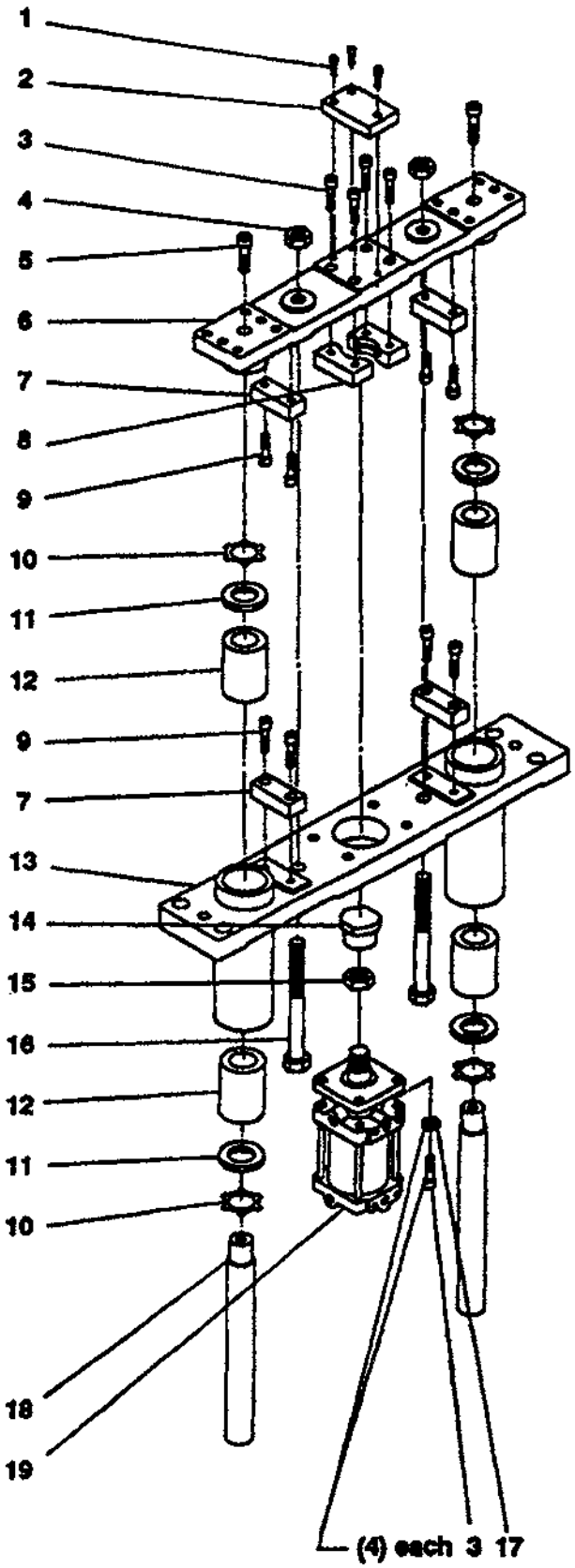

NOTE:
TO ORDER A SPARE PART FOR YOUR LIFTER UNIT INCLUDE THE MODEL NUMBER AND THE PART NUMBER.

EXAMPLE:
MODEL # M-1425 X 7
PART # 77-1074

ITEM	PART #	NAME
1	77-1115	SHCS # 10-32
2	77-1081	DRIVER PLATE
3	77-1113	SHCS 5/16-18
4	77-1057	JAM NUT 5/8-11
5	77-1119	SHCS 3/8-16
6	99-1086	LIFTER PLATE
7	77-1080	STOP BLOCK
8	77-1067	ROD-END CAP RETAINER
9	77-1113	SHCS 5/16-18
10	77-1075	BUSHING RETAINING RING
11	88-1084	BUSHING SEAL
12	77-1074	BALL BUSHING BEARING
13	99-1085	LIFTER HOUSING
14	77-1066	ROD-END CAP
15	77-1056	JAM NUT 3/4-16
16	77-1079	STOP ROD
17	77-1114	LOCK WASHER
18	99-1087	GUIDE SHAFT
19	CP9250	PENINSULAR AIR CYLINDER

PENINSULAR,® INC.
27650 Groesbeck Highway, Roseville, Michigan 48066-2759
(586) 775-7211 Fax: (586) 775-4545 Toll Free: (800) 526-7968

PARTS LIST - LIFTER UNIT M-1426

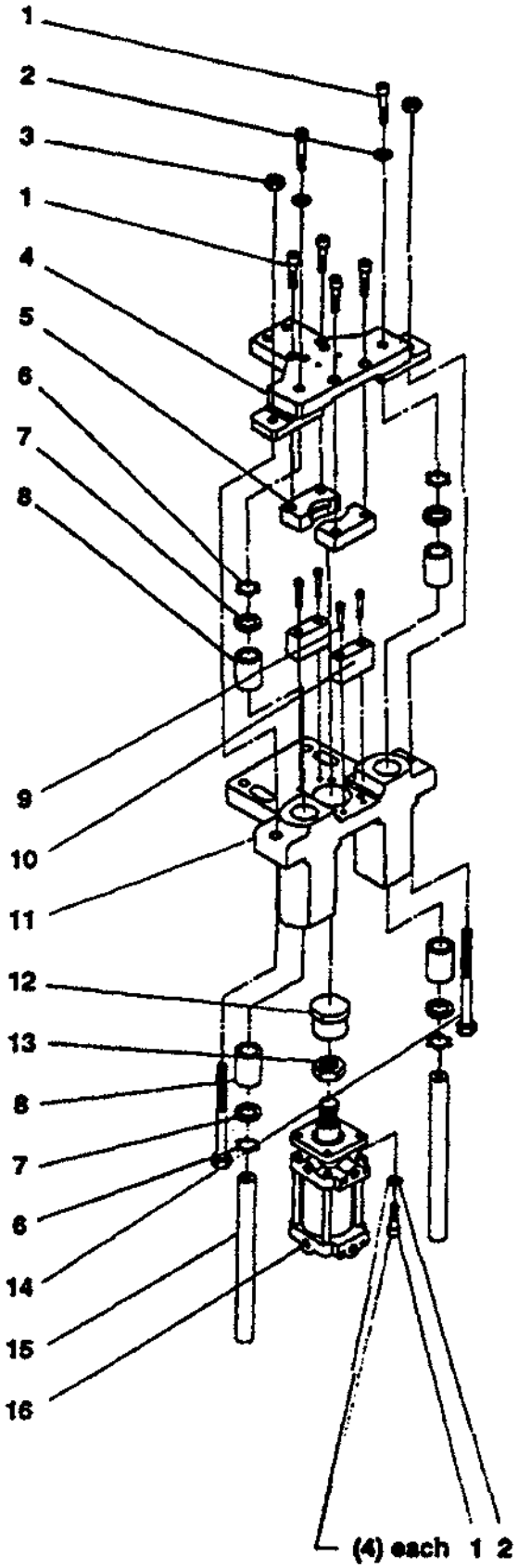

NOTE:
TO ORDER A SPARE PART FOR YOUR LIFTER UNIT INCLUDE THE MODEL NUMBER AND THE PART NUMBER.

EXAMPLE:
MODEL # M-1426 X 4
PART # 77-1058

ITEM	PART #	NAME
1	77-1113	SHCS 5/16-18
2	77-1114	LOCK WASHER
3	77-0919	JAM NUT 3/8-16
4	77-1065	LIFTER PLATE
5	77-1067	ROD-END CAP RETAINER
6	77-1059	BUSHING RETAINING RING
7	88-1070	BUSHING SEAL
8	77-1058	BALL BUSHING BEARING
9	77-1115	SHCS # 10-32
10	77-1061	STOP BLOCK
11	99-1073	LIFTER HOUSING
12	77-1066	ROD-END CAP
13	77-1056	JAM NUT 3/4-16
14	77-1062	STOP ROD
15	99-1071	GUIDE SHAFT
16	CP9200	PENINSULAR AIR CYLINDER

PENINSULAR,® INC. 27650 Groesbeck Highway, Roseville, Michigan 48066-2759
(586) 775-7211 Fax: (586) 775-4545 Toll Free: (800) 526-7968

Peninsular® inc.

27650 Groesbeck Highway * Roseville, MI 48066-2759 * (586) 775-7211 * Fax (586) 775-4545 * 1-800-526-7968 *

HOW TO ORDER PENINSULAR M1541 MEDIUM DUTY METRIC SLIDE/LIFTER AND M1542 HEAVY DUTY METRIC SLIDE/LIFTER

SAMPLE ORDER:	***M1541***	***B***	***X***	***50***	***R1-C1***	***/T11***
POSITION:	1	2		3	4	5

Position 1.
Specify Lifter Bore Size

M1541 = Metric Straight Line Lifter with 40MM Bore Cylinder

M1542 = Metric Straight Line Lifter with 63MM Bore Cylinder

Position 2.
Specify Type of Mount Required

Specify A – For Wrap Around Front Mount

Specify B – For Square Block Side Mount

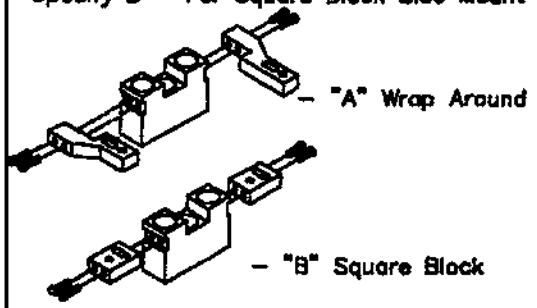

Position 3.
Stroke Length

Specify Required Stroke In Millimeters
25MM Stroke Increments

Position 4.
Optional Proximity Switch (Mounting Location)

Specify R1 –
For Proximity Switch Mounted On Rod End Cap To Sense Extended Stroke.(Complete position 5.)

Specify C1 –
For Proximity Switch Mounted On Rear End Cap To Sense Retracted Stroke.(Complete Position 5.)

Specify R1-C1 –
For Proximity Switch Mounted On Front and Rear End Caps to Sense Extended and Retracted Stroke. (Complete position 5.)

Specify 0 – If No Proximity Switch Cylinder Capability Is Required.

Position 5.
Specify Proximity Switch Type:

/S – Namco Standard (Series F)(Mini)
/L – Namco Low Profile (Micro)
/LPR – Namco Low Profile Rotatable (Mini)
/T11 – Turck (Mini)
/T31 – Turck (Micro)
/0 – Proximity Switch Not Supplied.

NOTE: Are Proximity Switch Cordsets Required? If Yes, See the HOW TO ORDER Proximity Switch Cordsets in Section 14 (Proximity Switches) of Peninsular Three Ring Binder.

NOTE: FOR STROKE LENGTHS UP TO 200MM: INDEPENDENT STOP COLLARS WITH SHOCK PADS ARE SUPPLIED AT THE BOTTOM OF EACH GUIDE SHAFT AS A STANDARD FEATURE.

NOTE: FOR STROKE LENGTHS OVER TO 200MM: ONE STOP BAR, STABILIZING BOTH GUIDE SHAFTS WITH INDEPENDENT SHOCK PADS IS SUPPLIED WITH EACH LIFTER AS A STANDARD FEATURE.

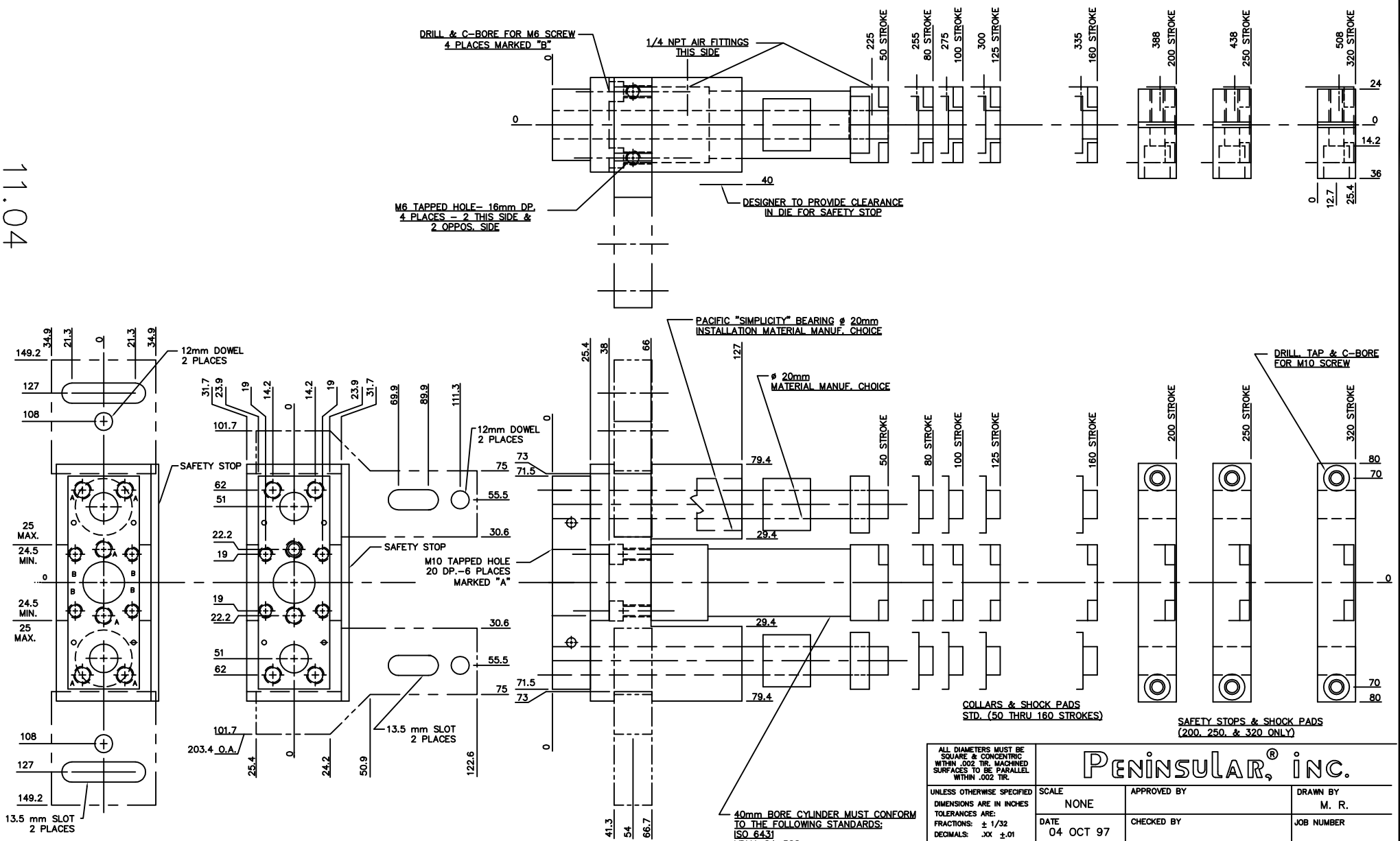

ALL DIAMETERS MUST BE SQUARE & CONCENTRIC WITHIN .002 TIR. MACHINED SURFACES TO BE PARALLEL WITHIN .002 TIR.	PENINSULAR® INC.		
UNLESS OTHERWISE SPECIFIED DIMENSIONS ARE IN INCHES TOLERANCES ARE: FRACTIONS: ± 1/32 DECIMALS: .XX ±.01 .XXX ±.005 .XXXX ±.0005 ANGLES: ±0° 30'	SCALE NONE	APPROVED BY	DRAWN BY M. R.
	DATE 04 OCT 97	CHECKED BY	JOB NUMBER
	M–1541		REVISION LEVEL 00
REMOVE ALL BURRS & BREAK ALL SHARP EDGES. 1/64 x 45°	ISO LIFTER LIGHT DUTY AIR OPERATED		PART NUMBER M–1541
DESCRIPTION OF OPERATION		OPER. NO.	CONTROL NUMBER

REV. 02/09/2010

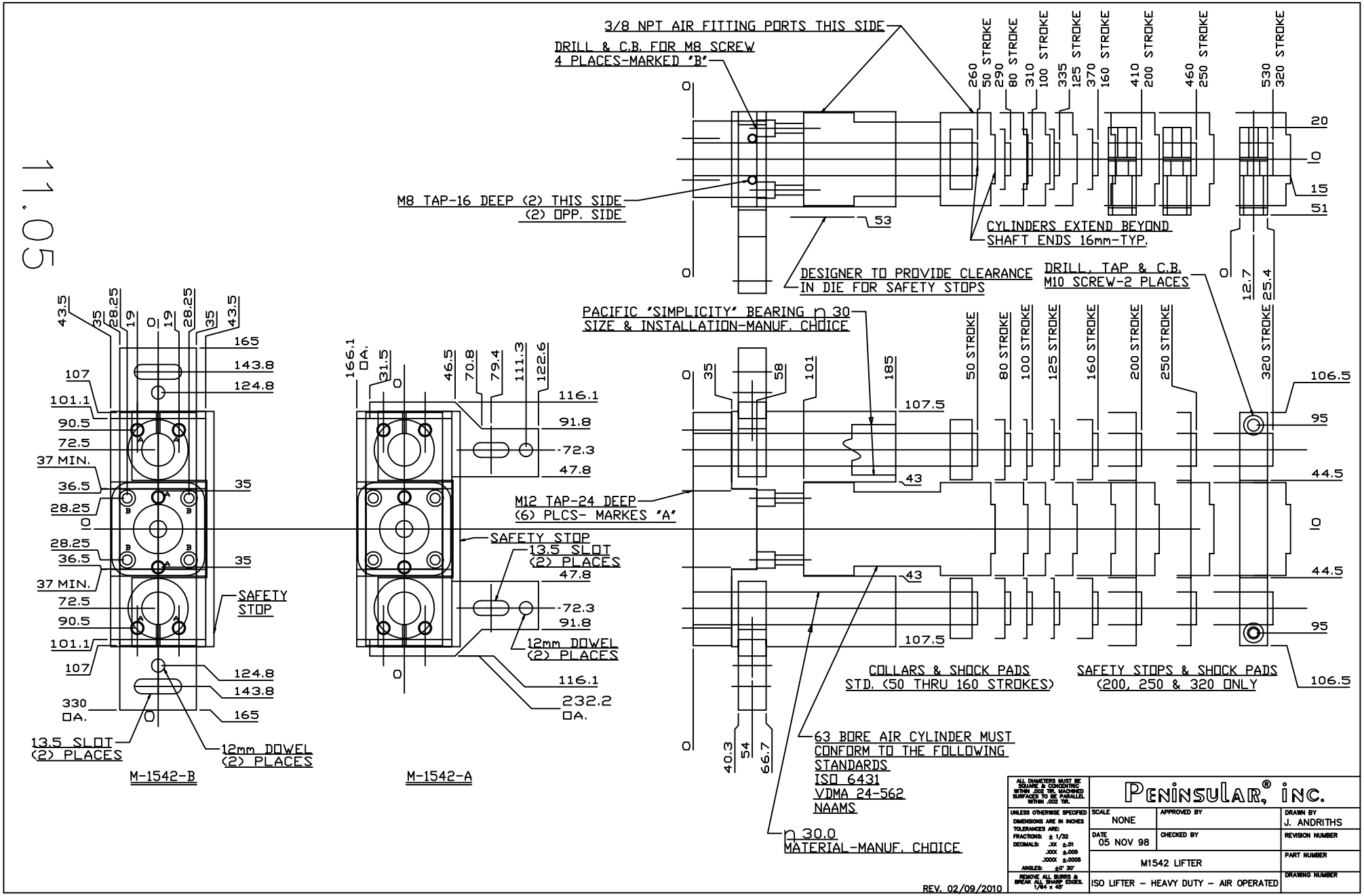
3/8 NPT AIR FITTING PORTS THIS SIDE
DRILL & C.B. FOR M8 SCREW
4 PLACES-MARKED "B"
M8 TAP-16 DEEP (2) THIS SIDE
(2) OPP. SIDE
260 50 STROKE
290 80 STROKE
310 100 STROKE
335 125 STROKE
370 160 STROKE
410 200 STROKE
460 250 STROKE
530 320 STROKE
CYLINDERS EXTEND BEYOND
SHAFT ENDS 16mm-TYP.
DESIGNER TO PROVIDE CLEARANCE
IN DIE FOR SAFETY STOPS
DRILL, TAP & C.B.
M10 SCREW-2 PLACES
PACIFIC "SIMPLICITY" BEARING ⌀30
SIZE & INSTALLATION-MANUF. CHOICE
M12 TAP-24 DEEP
(6) PLCS- MARKES "A"
SAFETY STOP
13.5 SLOT
(2) PLACES
12mm DOWEL
(2) PLACES
SAFETY STOP
13.5 SLOT
(2) PLACES
12mm DOWEL
(2) PLACES
330 DA.
166.1 DA.
232.2 DA.
COLLARS & SHOCK PADS
STD. (50 THRU 160 STROKES)
SAFETY STOPS & SHOCK PADS
(200, 250 & 320 ONLY
63 BORE AIR CYLINDER MUST
CONFORM TO THE FOLLOWING
STANDARDS
ISO 6431
VDMA 24-562
NAAMS
⌀30.0
MATERIAL-MANUF. CHOICE
M-1542-B
M-1542-A
REV. 02/09/2010
ALL DIAMETERS MUST BE SQUARE & CONCENTRIC WITHIN .002 TIR. MACHINED SURFACES TO BE PARALLEL WITHIN .002 TIR.
UNLESS OTHERWISE SPECIFIED
DIMENSIONS ARE IN INCHES
TOLERANCES ARE:
FRACTIONS: ± 1/32
DECIMALS: .XX ±.01
.XXX ±.005
.XXXX ±.0005
ANGLES: ±0° 30'
REMOVE ALL BURRS & BREAK ALL SHARP EDGES. 1/64 x 45°
PENINSULAR® INC.
SCALE NONE
APPROVED BY
DRAWN BY J. ANDRITHS
DATE 05 NOV 98
CHECKED BY
REVISION NUMBER
M1542 LIFTER
PART NUMBER
ISO LIFTER – HEAVY DUTY – AIR OPERATED
DRAWING NUMBER

11.05

NOTE M1541 REDISGNED PER GM COST REDUCTION REQUIRMENT. MAY-22-2003

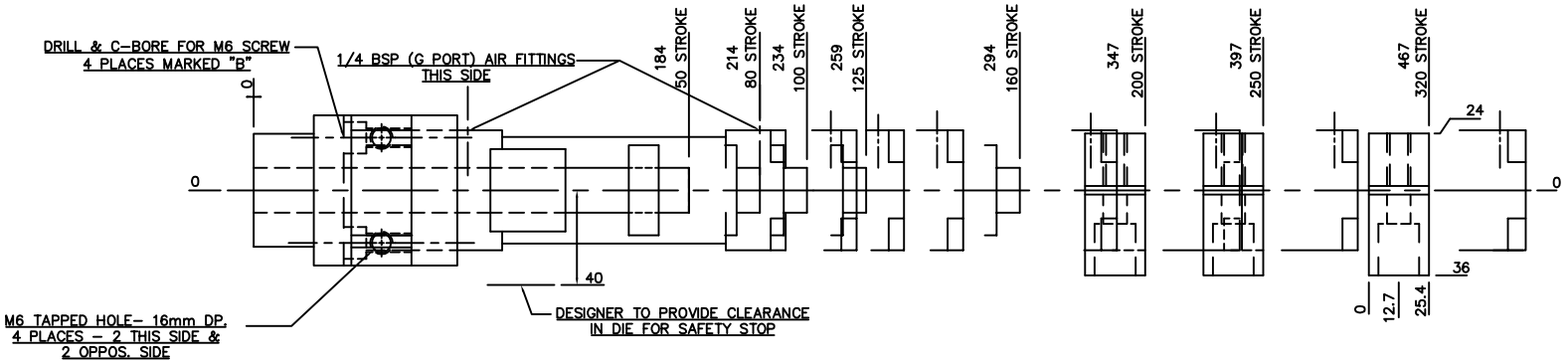

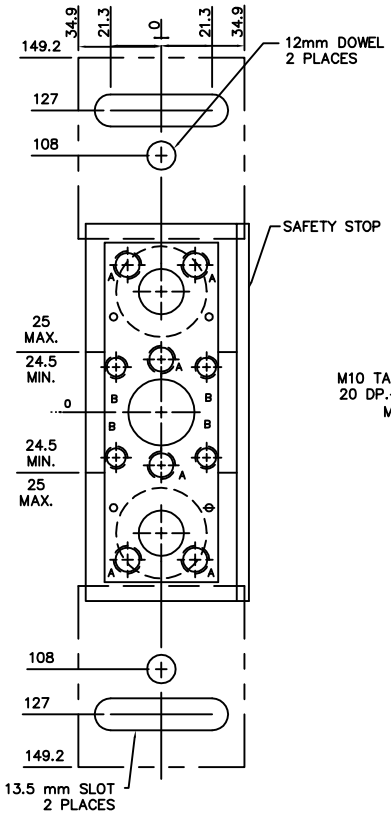

M-UNIT#-B

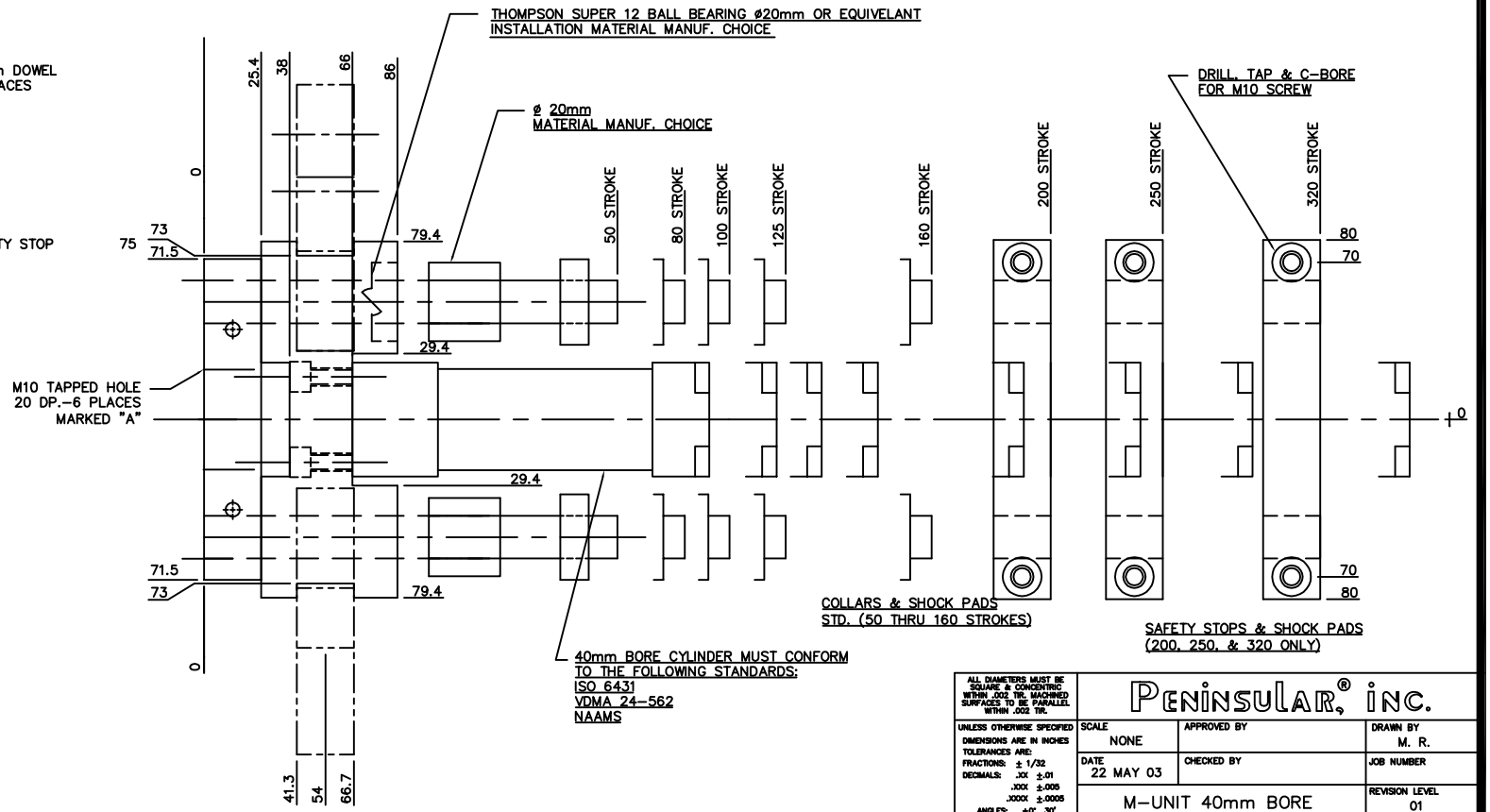

REV. 02/09/2010

ALL DIAMETERS MUST BE SQUARE & CONCENTRIC WITHIN .002 TIR. MACHINED SURFACES TO BE PARALLEL WITHIN .002 TIR.	PENINSULAR® INC.		
UNLESS OTHERWISE SPECIFIED DIMENSIONS ARE IN INCHES TOLERANCES ARE: FRACTIONS: ± 1/32 DECIMALS: .XX ±.01 .XXX ±.005 .XXXX ±.0005 ANGLES: ±0° 30'	SCALE NONE	APPROVED BY	DRAWN BY M. R.
	DATE 22 MAY 03	CHECKED BY	JOB NUMBER
	M-UNIT 40mm BORE		REVISION LEVEL 01
REMOVE ALL BURRS & BREAK ALL SHARP EDGES. 1/64 x 45°	ISO LIFTER LIGHT DUTY AIR OPERATED		PART NUMBER SEF1010
DESCRIPTION OF OPERATION		OPER. NO.	CONTROL NUMBER

11.06

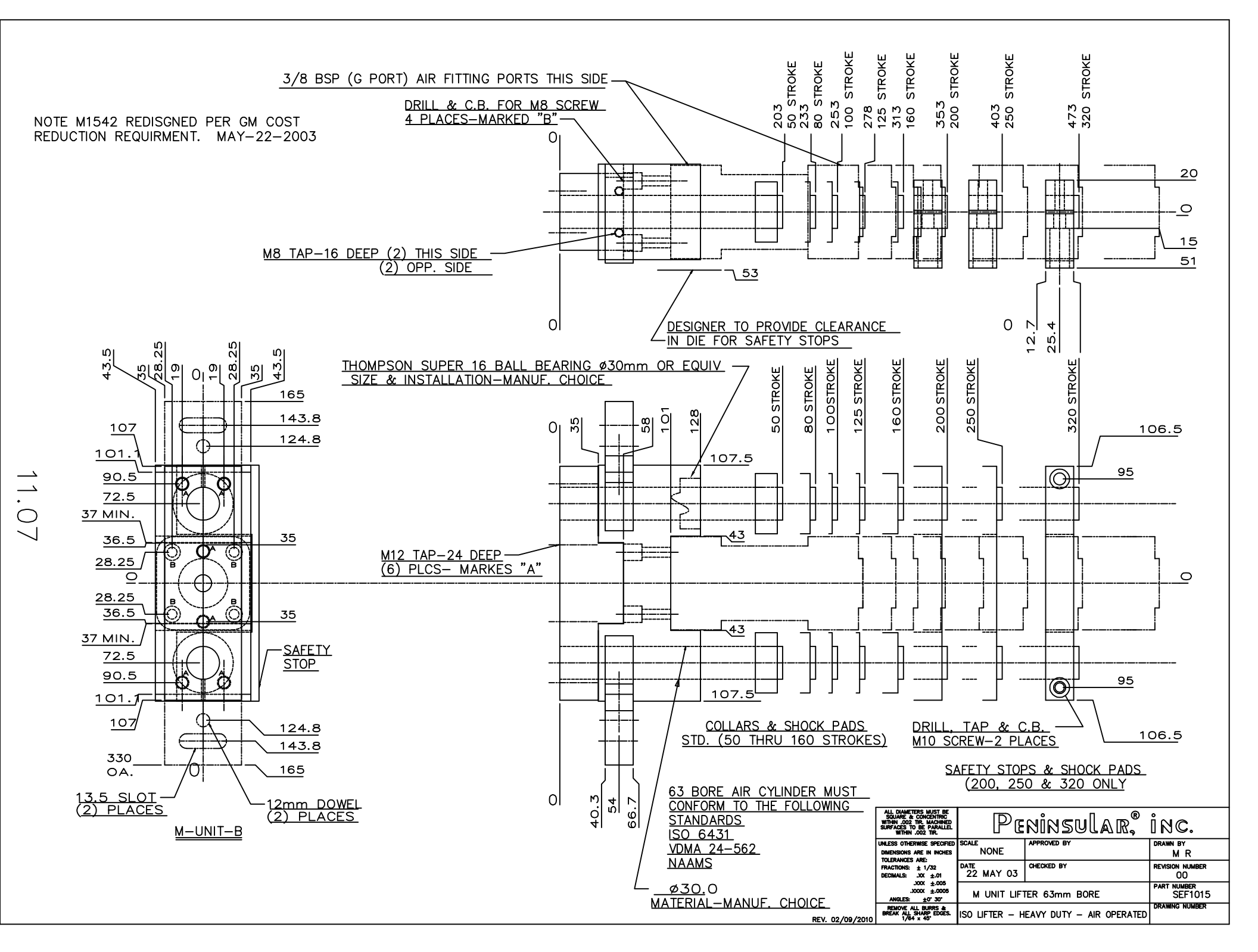
NOTE M1542 REDISGNED PER GM COST REDUCTION REQUIRMENT. MAY-22-2003
3/8 BSP (G PORT) AIR FITTING PORTS THIS SIDE
DRILL & C.B. FOR M8 SCREW 4 PLACES-MARKED "B"
M8 TAP-16 DEEP (2) THIS SIDE (2) OPP. SIDE
DESIGNER TO PROVIDE CLEARANCE IN DIE FOR SAFETY STOPS
203 50 STROKE
233 80 STROKE
253 100 STROKE
278 125 STROKE
313 160 STROKE
353 200 STROKE
403 250 STROKE
473 320 STROKE
THOMPSON SUPER 16 BALL BEARING ø30mm OR EQUIV SIZE & INSTALLATION-MANUF. CHOICE
M12 TAP-24 DEEP (6) PLCS- MARKES "A"
SAFETY STOP
13.5 SLOT (2) PLACES
12mm DOWEL (2) PLACES
330 OA.
M-UNIT-B
COLLARS & SHOCK PADS STD. (50 THRU 160 STROKES)
DRILL, TAP & C.B. M10 SCREW-2 PLACES
SAFETY STOPS & SHOCK PADS (200, 250 & 320 ONLY)
63 BORE AIR CYLINDER MUST CONFORM TO THE FOLLOWING STANDARDS
ISO 6431
VDMA 24-562
NAAMS
ø30.0 MATERIAL-MANUF. CHOICE
REV. 02/09/2010
ALL DIAMETERS MUST BE SQUARE & CONCENTRIC WITHIN .002 TIR. MACHINED SURFACES TO BE PARALLEL WITHIN .002 TIR.
UNLESS OTHERWISE SPECIFIED DIMENSIONS ARE IN INCHES TOLERANCES ARE: FRACTIONS: ± 1/32 DECIMALS: .XX ±.01 .XXX ±.005 .XXXX ±.0005 ANGLES: ±0° 30'
REMOVE ALL BURRS & BREAK ALL SHARP EDGES. 1/64 x 45°
PENINSULAR® INC.
SCALE NONE
APPROVED BY
DRAWN BY M R
DATE 22 MAY 03
CHECKED BY
REVISION NUMBER 00
M UNIT LIFTER 63mm BORE
PART NUMBER SEF1015
ISO LIFTER - HEAVY DUTY - AIR OPERATED
DRAWING NUMBER