END LUGS

Heavy Duty Steel Air Cylinder

Peninsular Mounting Style: **MH 14**

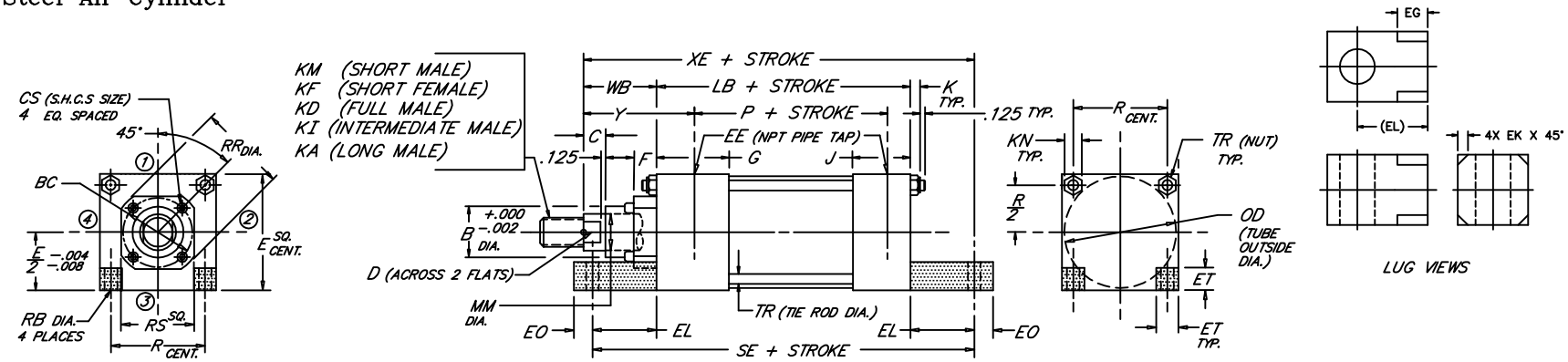

BORE	ROD MM	ROD THREAD X LENGTH KM & KF	KD	KI	KA	B	BC	C	CS	D	E	NPT EE	EG	EK	EL	EO	ET	F	G	J	K	KN	LB	OD	P	R	RB	RR	RS	SE	TR	WB	XE	Y
8.000	1.375	1"-14 x 1.625	1 3/8"-12 x 1.625	1 1/4"-12 x 1.625	1 1/4"-12 x 2.500	1.999	3.267	.625	.312	1.125	8.500	3/4	---	---	1.125	.625	2.062	.625	2.000	1.500	.750	.938	5.125	8.450	3.375	6.435	.688	3.734	3.000	7.375	.625	1.625	7.875	2.750
	1.750	1 1/4"-12 x 2.000	1 3/4"-12 x 2.000	1 1/2"-12 x 2.000	1 1/2"-12 x 3.000	2.374	3.267	.750	.312	1.500			---	---														3.734	3.000			1.875	8.125	3.000
	2.000	1 1/2"-12 x 2.250	2"-12 x 2.250	1 3/4"-12 x 2.250	1 3/4"-12 x 3.500	2.624	3.812	.875	.312	1.688			---	---														4.312	3.750			2.000	8.250	3.125
	2.500	1 7/8"-12 x 3.000	2 1/2"-12 x 3.000	2 1/4"-12 x 3.000	2 1/4"-12 x 4.500	3.124	3.812	1.000	.312	2.062			---	---														4.312	3.750			2.250	8.500	3.375
	3.000	2 1/4"-12 x 3.500	3"-12 x 3.500	2 3/4"-12 x 3.500	2 3/4"-12 x 5.500	3.749	4.700	1.000	.375	2.625			---	---														5.562	4.500			2.250	8.500	3.375
	3.500	2 1/2"-12 x 3.500	3 1/2"-12 x 3.500	3 1/4"-12 x 3.500	3 1/4"-12 x 6.500	4.249	5.200	1.000	.375	3.000			---	---														6.062	5.000			2.250	8.500	3.375
	4.000	3"-12 x 4.000	4"-12 x 4.000	3 3/4"-12 x 4.000	3 3/4"-12 x 7.500	4.749	5.700	1.000	.375	3.375			---	---														6.562	5.500			2.250	8.500	3.375
	4.500	3 1/4"-12 x 4.500	4 1/2"-12 x 4.500	4 1/4"-12 x 4.500	4 1/4"-12 x 8.250	5.249	6.200	1.000	.375	3.875			---	---														7.062	6.000			2.250	8.500	3.375
	5.000	3 1/2"-12 x 5.000	5"-12 x 5.000	4 3/4"-12 x 5.000	4 3/4"-12 x 9.000	5.749	6.700	1.000	.375	4.250			---	---														7.562	6.500			2.250	8.500	3.375
	5.500	4"-12 x 5.500	5 1/2"-12 x 5.500	5 1/4"-12 x 5.500	5 1/4"-12 x 10.000	6.249	7.125	1.000	.375	4.625			1.380	.060														7.938	7.000			2.250	8.500	3.375
10.000	1.750	1 1/4"-12 x 2.000	1 3/4"-12 x 2.000	1 1/2"-12 x 2.000	1 1/2"-12 x 3.000	2.374	3.812	.750	.312	1.500	10.625	1	---	---	1.3125	.625	2.688	.625	2.250	2.000	.875	1.062	6.375	10.450	4.250	7.920	.812	4.312	3.750	9.000	.750	1.875	9.562	3.062
	2.000	1 1/2"-12 x 2.250	2"-12 x 2.250	1 3/4"-12 x 2.250	1 3/4"-12 x 3.500	2.624	3.812	.875	.312	1.688																		4.312	3.750			2.000	9.688	3.187
	2.500	1 7/8"-12 x 3.000	2 1/2"-12 x 3.000	2 1/4"-12 x 3.000	2 1/4"-12 x 4.500	3.124	3.812	1.000	.312	2.062																		4.312	3.750			2.250	9.938	3.437
	3.000	2 1/4"-12 x 3.500	3"-12 x 3.500	2 3/4"-12 x 3.500	2 3/4"-12 x 5.500	3.749	4.700	1.000	.375	2.625																		5.562	4.500			2.250	9.938	3.437
	3.500	2 1/2"-12 x 3.500	3 1/2"-12 x 3.500	3 1/4"-12 x 3.500	3 1/4"-12 x 6.500	4.249	5.200	1.000	.375	3.000																		6.062	5.000			2.250	9.938	3.437
	4.000	3"-12 x 4.000	4"-12 x 4.000	3 3/4"-12 x 4.000	3 3/4"-12 x 7.500	4.749	5.700	1.000	.375	3.375																		6.562	5.500			2.250	9.938	3.437
	4.500	3 1/4"-12 x 4.500	4 1/2"-12 x 4.500	4 1/4"-12 x 4.500	4 1/4"-12 x 8.250	5.249	6.200	1.000	.375	3.875																		7.062	6.000			2.250	9.938	3.437
	5.000	3 1/2"-12 x 5.000	5"-12 x 5.000	4 3/4"-12 x 5.000	4 3/4"-12 x 9.000	5.749	6.700	1.000	.375	4.250																		7.562	6.500			2.250	9.938	3.437
	5.500	4"-12 x 5.500	5 1/2"-12 x 5.500	5 1/4"-12 x 5.500	5 1/4"-12 x 10.000	6.249	7.125	1.000	.375	4.625																		7.938	7.000			2.250	9.938	3.437
12.000	2.000	1 1/2"-12 x 2.250	2"-12 x 2.250	1 3/4"-12 x 2.250	1 3/4"-12 x 3.500	2.624	3.812	.875	.312	1.688	12.750	1	---	---	1.3125	.625	3.312	.625	2.250	2.000	.875	1.062	6.875	12.450	4.750	9.405	.812	4.312	3.750	9.500	.750	2.000	10.188	3.187
	2.500	1 7/8"-12 x 3.000	2 1/2"-12 x 3.000	2 1/4"-12 x 3.000	2 1/4"-12 x 4.500	3.124	3.812	1.000	.312	2.062																		4.312	3.750			2.250	10.438	3.437
	3.000	2 1/4"-12 x 3.500	3"-12 x 3.500	2 3/4"-12 x 3.500	2 3/4"-12 x 5.500	3.749	4.700	1.000	.375	2.625																		5.562	4.500			2.250	10.438	3.437
	3.500	2 1/2"-12 x 3.500	3 1/2"-12 x 3.500	3 1/4"-12 x 3.500	3 1/4"-12 x 6.500	4.249	5.200	1.000	.375	3.000																		6.062	5.000			2.250	10.438	3.437
	4.000	3"-12 x 4.000	4"-12 x 4.000	3 3/4"-12 x 4.000	3 3/4"-12 x 7.500	4.749	5.700	1.000	.375	3.375																		6.562	5.500			2.250	10.438	3.437
	4.500	3 1/4"-12 x 4.500	4 1/2"-12 x 4.500	4 1/4"-12 x 4.500	4 1/4"-12 x 8.250	5.249	6.200	1.000	.375	3.875																		7.062	6.000			2.250	10.438	3.437
	5.000	3 1/2"-12 x 5.000	5"-12 x 5.000	4 3/4"-12 x 5.000	4 3/4"-12 x 9.000	5.749	6.700	1.000	.375	4.250																		7.562	6.500			2.250	10.438	3.437
	5.500	4"-12 x 5.500	5 1/2"-12 x 5.500	5 1/4"-12 x 5.500	5 1/4"-12 x 10.000	6.249	7.125	1.000	.375	4.625																		7.938	7.000			2.250	10.438	3.437
14.000	2.500	1 7/8"-12 x 3.000	2 1/2"-12 x 3.000	2 1/4"-12 x 3.000	2 1/4"-12 x 4.500	3.124	3.812		.312	2.062	14.750	1 1/4	---	---	1.500	.750	3.812	.625	2.750	2.250	1.000	1.250	8.125	14.450	5.625	10.889	.938	4.312	3.750	11.125	.875	2.250	11.875	3.688
	3.000	2 1/4"-12 x 3.500	3"-12 x 3.500	2 3/4"-12 x 3.500	2 3/4"-12 x 5.500	3.749	4.700		.375	2.625																		5.562	4.500					
	3.500	2 1/2"-12 x 3.500	3 1/2"-12 x 3.500	3 1/4"-12 x 3.500	3 1/4"-12 x 6.500	4.249	5.200		.375	3.000																		6.062	5.000					
	4.000	3"-12 x 4.000	4"-12 x 4.000	3 3/4"-12 x 4.000	3 3/4"-12 x 7.500	4.749	5.700	1.000	.375	3.375																		6.562	5.500					
	4.500	3 1/4"-12 x 4.500	4 1/2"-12 x 4.500	4 1/4"-12 x 4.500	4 1/4"-12 x 8.250	5.249	6.200		.375	3.875																		7.062	6.000					
	5.000	3 1/2"-12 x 5.000	5"-12 x 5.000	4 3/4"-12 x 5.000	4 3/4"-12 x 9.000	5.749	6.700		.375	4.250																		7.562	6.500					
	5.500	4"-12 x 5.500	5 1/2"-12 x 5.500	5 1/4"-12 x 5.500	5 1/4"-12 x 10.000	6.249	7.125		.375	4.625																		7.938	7.000					
BORE	MM	KM & KF	KD	KI	KA	B	BC	C	CS	D	E	EE	EG	EK	EL	EO	ET	F	G	J	K	KN	LB	OD	P	R	RB	RR	RS	SE	TR	WB	XE	Y

FILE: 1.14_MH14L2.dwg REV: 02/09/2010

27650 Groesbeck Hwy • Roseville, MI 48066-2759 • Phone 586.775.7211 • Fax 586.775.4545 • Toll Free 800.526.7968 • e-mail: sales@peninsularcylinders.com • www.peninsularcylinders.com