CAP DETACHABLE CLEVIS

Low Pressure Steel Hydraulic Cylinder

BORE	1.50	2.00	2.50	3.25	4.00	5.00	6.00
WORKING P.S.I.	1500	1500	1000	1000	1000	800	800
RATED P.S.I.	2500	2500	1500	1500	1500	1200	1200

Peninsular Mounting Style: **LH 27**

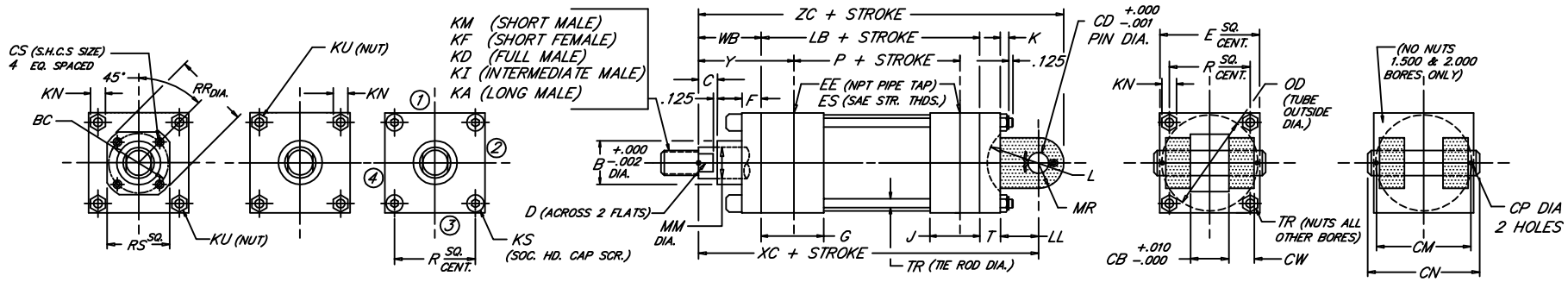

BORE	MM	ROD: KM & KF	ROD: KD	ROD: KI	ROD: KA	B	BC	C	CB	CD	CM	CN	CP	CS	CW	D	E	EE (NPT)	ES (SAE)	F	G	J	K	KN	KS	KU	L	LB	LL	MR	OD	P	R	RR	RS	T	TR	WB	XC	Y	ZC
1.500	.625	7/16"-20 x .750	5/8"-18 x .750	1/2"-20 x .750	1/2"-20 x 1.125	1.124	---	.375	.765	.500	1.938	2.281	.106	---	.500	.500	2.000	3/8	-6	.375	1.500	1.000	.344	.500	---	.312	.625	3.625	.375	.625	1.750	2.335	1.478	---	---	.375	.312	1.000	5.375	1.875	6.000
	1.000	3/4"-16 x 1.125	1"-14 x 1.125	7/8"-14 x 1.125	7/8"-14 x 1.875	1.499		.500								.875																						1.375	5.750	2.250	6.375
2.000	.625	7/16"-20 x .750	5/8"-18 x .750	1/2"-20 x .750	1/2"-20 x 1.125	1.124	---	.375	.765	.500	1.938	2.281	.106	---	.500	.500	2.500	3/8	-6	.375	1.500	1.000	.406	.562	---	.375	.625	3.625	.375	.625	2.375	2.335	1.966	---	---	.375	.375	1.000	5.375	1.875	6.000
	1.000	3/4"-16 x 1.125	1"-14 x 1.125	7/8"-14 x 1.125	7/8"-14 x 1.875	1.499		.500								.875																						1.375	5.750	2.250	6.375
	1.375	1"-14 x 1.625	1 3/8"-12 x 1.625	1 1/4"-12 x 1.625	1 1/4"-12 x 2.500	1.999		.625								1.125																						1.625	6.000	2.500	6.625
2.500	.625	7/16"-20 x .750	5/8"-18 x .750	1/2"-20 x .750	1/2"-20 x 1.125	1.124	---	.375	.765	.500	1.938	2.281	.106	---	.500	.500	3.000	3/8	-6	.375	1.500	1.000	.406	.562	.375	---	.625	3.750	.375	.625	2.875	2.460	2.320	---	---	.375	.375	1.000	5.500	1.875	6.125
	1.000	3/4"-16 x 1.125	1"-14 x 1.125	7/8"-14 x 1.125	7/8"-14 x 1.875	1.499		.500								.875																						1.375	5.875	2.250	6.500
	1.375	1"-14 x 1.625	1 3/8"-12 x 1.625	1 1/4"-12 x 1.625	1 1/4"-12 x 2.500	1.999		.625								1.125																						1.625	6.125	2.500	6.750
	1.750	1 1/4"-12 x 2.000	1 3/4"-12 x 2.000	1 1/2"-12 x 2.000	1 1/2"-12 x 3.000	2.374		.750								1.500																						1.875	6.375	2.750	7.000
3.250	1.000	3/4"-16 x 1.125	1"-14 x 1.125	7/8"-14 x 1.125	7/8"-14 x 1.875	1.499	---	.500	1.265	.750	2.719	3.094	.140	---	.625	.875	3.750	1/2	-8	.625	1.750	1.250	.531	.750	.500	---	.875	4.250	.625	.875	3.625	2.750	2.942	---	---	.625	.500	1.375	6.875	2.375	7.750
	1.375	1"-14 x 1.625	1 3/8"-12 x 1.625	1 1/4"-12 x 1.625	1 1/4"-12 x 2.500	1.999		.625								1.125																						1.625	7.125	2.625	8.000
	1.750	1 1/4"-12 x 2.000	1 3/4"-12 x 2.000	1 1/2"-12 x 2.000	1 1/2"-12 x 3.000	2.374		.750								1.500																						1.875	7.375	2.875	8.250
	2.000	1 1/2"-12 x 2.250	2"-12 x 2.250	1 3/4"-12 x 2.250	1 3/4"-12 x 3.500	2.624		.875								1.688																						2.000	7.500	3.000	8.375
4.000	1.000	3/4"-16 x 1.125	1"-14 x 1.125	7/8"-14 x 1.125	7/8"-14 x 1.875	1.499	2.562	.500	1.265	.750	2.719	3.094	.140	.250	.625	.875	4.500	1/2	-8	.625	1.750	1.250	.531	.750	---	.500	.875	4.250	.625	.875	4.375	2.750	3.469	2.969	2.500	.625	.500	1.375	6.875	2.375	7.750
	1.375	1"-14 x 1.625	1 3/8"-12 x 1.625	1 1/4"-12 x 1.625	1 1/4"-12 x 2.500	1.999	2.562	.625						.250		1.125									---	.500								2.969	2.500			1.625	7.125	2.625	8.000
	1.750	1 1/4"-12 x 2.000	1 3/4"-12 x 2.000	1 1/2"-12 x 2.000	1 1/2"-12 x 3.000	2.374	3.267	.750						.312		1.500									---	.500								3.734	3.000			1.875	7.375	2.875	8.250
	2.000	1 1/2"-12 x 2.250	2"-12 x 2.250	1 3/4"-12 x 2.250	1 3/4"-12 x 3.500	2.624	---	.875						---		1.688									.500	---								---	---			2.000	7.500	3.000	8.375
	2.500	1 7/8"-12 x 3.000	2 1/2"-12 x 3.000	2 1/4"-12 x 3.000	2 1/4"-12 x 4.500	3.124	---	1.000						---		2.062									.500	---								---	---			2.250	7.750	3.250	8.625
5.000	1.000	3/4"-16 x 1.125	1"-14 x 1.125	7/8"-14 x 1.125	7/8"-14 x 1.875	1.499	2.562	.500	1.265	.750	2.719	3.094	.140	.250	.625	.875	5.500	1/2	-8	.625	1.750	1.250	.656	.938	---	.625	.875	4.500	.625	.875	5.375	3.000	4.285	2.969	2.500	.625	.625	1.375	7.125	2.375	8.000
	1.375	1"-14 x 1.625	1 3/8"-12 x 1.625	1 1/4"-12 x 1.625	1 1/4"-12 x 2.500	1.999	2.562	.625						.250		1.125									---	.625								2.969	2.500			1.625	7.375	2.625	8.250
	1.750	1 1/4"-12 x 2.000	1 3/4"-12 x 2.000	1 1/2"-12 x 2.000	1 1/2"-12 x 3.000	2.374	3.267	.750						.312		1.500									---	.625								3.734	3.000			1.875	7.625	2.875	8.500
	2.000	1 1/2"-12 x 2.250	2"-12 x 2.250	1 3/4"-12 x 2.250	1 3/4"-12 x 3.500	2.624	3.812	.875						.312		1.688									---	.625								4.312	3.750			2.000	7.750	3.000	8.625
	2.500	1 7/8"-12 x 3.000	2 1/2"-12 x 3.000	2 1/4"-12 x 3.000	2 1/4"-12 x 4.500	3.124	3.812	1.000						.312		2.062									---	.625								4.312	3.750			2.250	8.000	3.250	8.875
	3.000	2 1/4"-12 x 3.500	3"-12 x 3.500	2 3/4"-12 x 3.500	2 3/4"-12 x 5.500	3.749	---	1.000						---		2.625									.625	---								---	---			2.250	8.000	3.250	8.875
	3.500	2 1/2"-12 x 3.500	3 1/2"-12 x 3.500	3 1/4"-12 x 3.500	3 1/4"-12 x 6.500	4.249	---	1.000						---		3.000									.625	---								---	---			2.250	8.000	3.250	8.875
6.000	1.375	1"-14 x 1.625	1 3/8"-12 x 1.625	1 1/4"-12 x 1.625	1 1/4"-12 x 2.500	1.999	3.267	.625	1.515	1.000	3.219	3.594	.140	.312	.750	1.125	6.500	3/4	-12	.625	2.000	1.500	.656	.938	---	.625	1.125	5.000	.750	1.250	6.375	3.250	4.992	3.734	3.000	.750	.625	1.625	8.125	2.750	9.375
	1.750	1 1/4"-12 x 2.000	1 3/4"-12 x 2.000	1 1/2"-12 x 2.000	1 1/2"-12 x 3.000	2.374	3.267	.750						.312		1.500				.625					---	.625								3.734	3.000			1.875	8.375	3.000	9.625
	2.000	1 1/2"-12 x 2.250	2"-12 x 2.250	1 3/4"-12 x 2.250	1 3/4"-12 x 3.500	2.624	3.812	.875						.312		1.688				.625					---	.625								4.312	3.750			2.000	8.500	3.125	9.750
	2.500	1 7/8"-12 x 3.000	2 1/2"-12 x 3.000	2 1/4"-12 x 3.000	2 1/4"-12 x 4.500	3.124	3.812	1.000						.312		2.062				.625					---	.625								4.312	3.750			2.250	8.750	3.375	10.000
	3.000	2 1/4"-12 x 3.500	3"-12 x 3.500	2 3/4"-12 x 3.500	2 3/4"-12 x 5.500	3.749	4.700	1.000						.375		2.625				.625					---	.625								5.562	4.500			2.250	8.750	3.375	10.000
	3.500	2 1/2"-12 x 3.500	3 1/2"-12 x 3.500	3 1/4"-12 x 3.500	3 1/4"-12 x 6.500	4.249	5.200	1.000						.375		3.000				.625					---	.625								6.062	5.000			2.250	8.750	3.375	10.000
	4.000	3"-12 x 4.000	4"-12 x 4.000	3 3/4"-12 x 4.000	3 3/4"-12 x 7.500	4.749	---	1.000						---		3.375				.750					.625	---								---	---			2.250	8.750	3.375	10.000

NEVA DESIGN

4.27

FILE: 4.27_LH27S2.dwg REV: 02/09/2010

27650 Groesbeck Hwy • Roseville, MI 48066-2759 • Phone 586.775.7211 • Fax 586.775.4545 • Toll Free 800.526.7968 • e-mail: sales@peninsularcylinders.com • www.peninsularcylinders.com